YAMAHA

YFM660FP

SERVICE MANUAL

LIT-11616-15-01

5KM-28197-E0

Downloaded from www.Manualslib.com manuals search engine

YFM660FP
SERVICE MANUAL
©2001 by Yamaha Motor Corporation, U.S.A.
First edition, May 2001
All rights reserved.
Any reproduction or unauthorized use
without the written permission of
Yamaha Motor Corporation, U.S.A.
is expressly prohibited.
Printed in U.S.A.
LIT-11616-15-01

Downloaded from www.Manualslib.com manuals search engine

EB001000

NOTICE

This manual was produced by the Yamaha Motor Company primarily for use by Yamaha dealers and their qualified mechanics. It is not possible to include all the knowledge of a mechanic in one manual, so it is assumed that anyone who uses this book to perform maintenance and repairs on Yamaha machine has a basic understanding of the mechanical ideas and the procedures of machine repair. Repairs attempted by anyone without this knowledge are likely to render the machine unsafe and unfit for use.

Yamaha Motor Company, Ltd. is continually striving to improve all its models. Modifications and significant changes in specifications or procedures will be forwarded to all authorized Yamaha dealers and will appear in future editions of this manual where applicable.

NOTE:
Designs and specifications are subject to change without notice.

IMPORTANT INFORMATION

Particularly important information is distinguished in this manual by the following notations.

⚠ The Safety Alert Symbol means ATTENTION! BECOME ALERT! YOUR SAFETY IS INVOLVED!

⚠ WARNING Failure to follow WARNING instructions could result in severe injury or death to the machine operator, a bystander or a person inspecting or repairing the machine.

CAUTION: A CAUTION indicates special precautions that must be taken to avoid damage to the machine.

NOTE: A NOTE provides key information to make procedures easier or clearer.

Downloaded from www.Manualslib.com manuals search engine

EB002000

HOW TO USE THIS MANUAL

MANUAL ORGANIZATION

This manual consists of chapters for the main categories of subjects. (See “Illustrated symbols”)

1st title ①: This is the title of the chapter with its symbol in the upper right corner of each page.

2nd title ②: This title indicates the section of the chapter and only appears on the first page of each section. It is located in the upper left corner of the page.

3rd title ③: This title indicates a sub-section that is followed by step-by-step procedures accompanied by corresponding illustrations.

EXPLODED DIAGRAMS

To help identify parts and clarify procedure steps, there are exploded diagrams at the start of each removal and disassembly section.

1. An easy-to-see exploded diagram ④ is provided for removal and disassembly jobs.
2. Numbers ⑤ are given in the order of the jobs in the exploded diagram. A number that is enclosed by a circle indicates a disassembly step.
3. An explanation of jobs and notes is presented in an easy-to-read way by the use of symbol marks ⑥. The meanings of the symbol marks are given on the next page.
4. A job instruction chart ⑦ accompanies the exploded diagram, providing the order of jobs, names of parts, notes in jobs, etc.
5. For jobs requiring more information, the step-by-step format supplements ⑧ are given in addition to the exploded diagram and the job instruction chart.

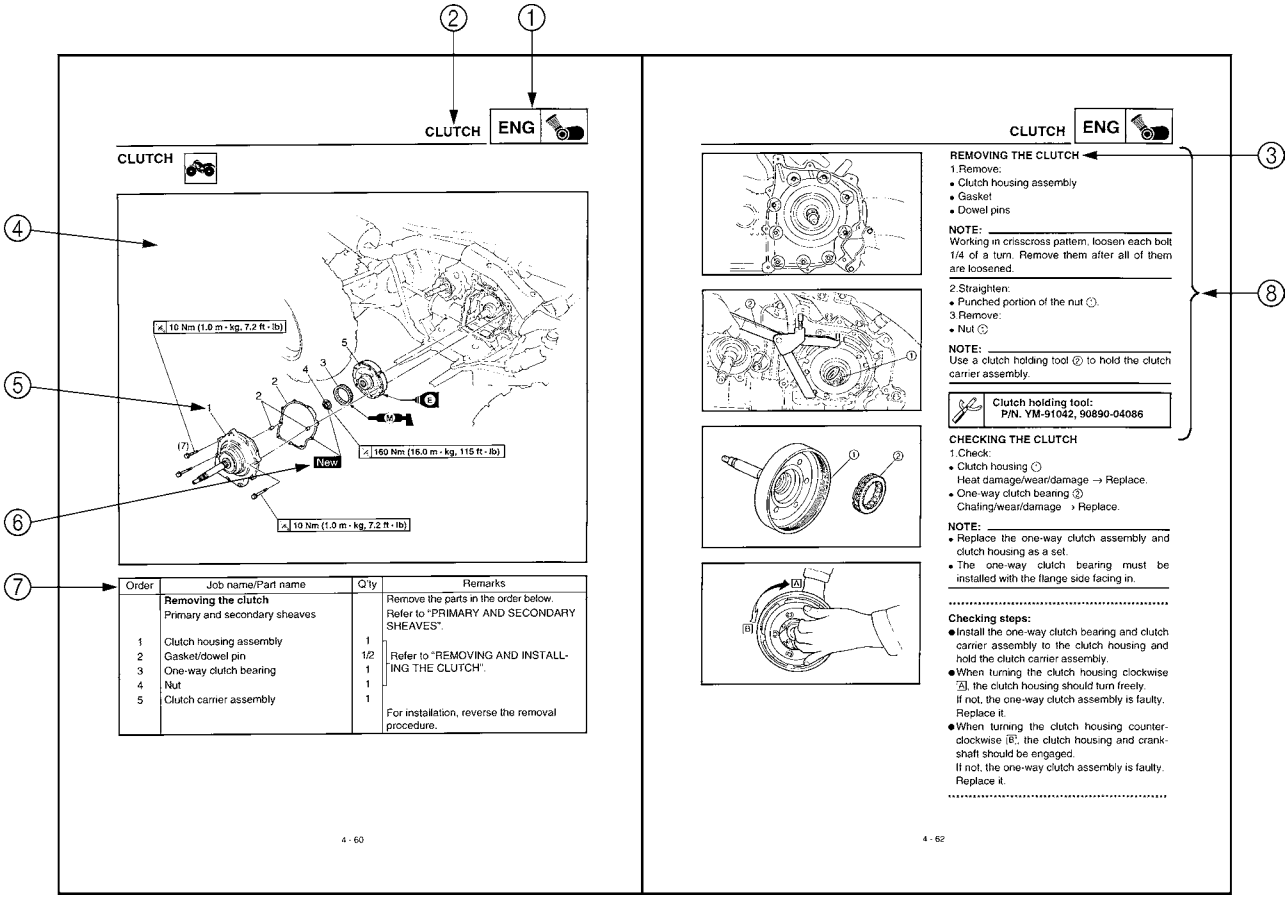

Downloaded from www.Manualslib.com manuals search engine

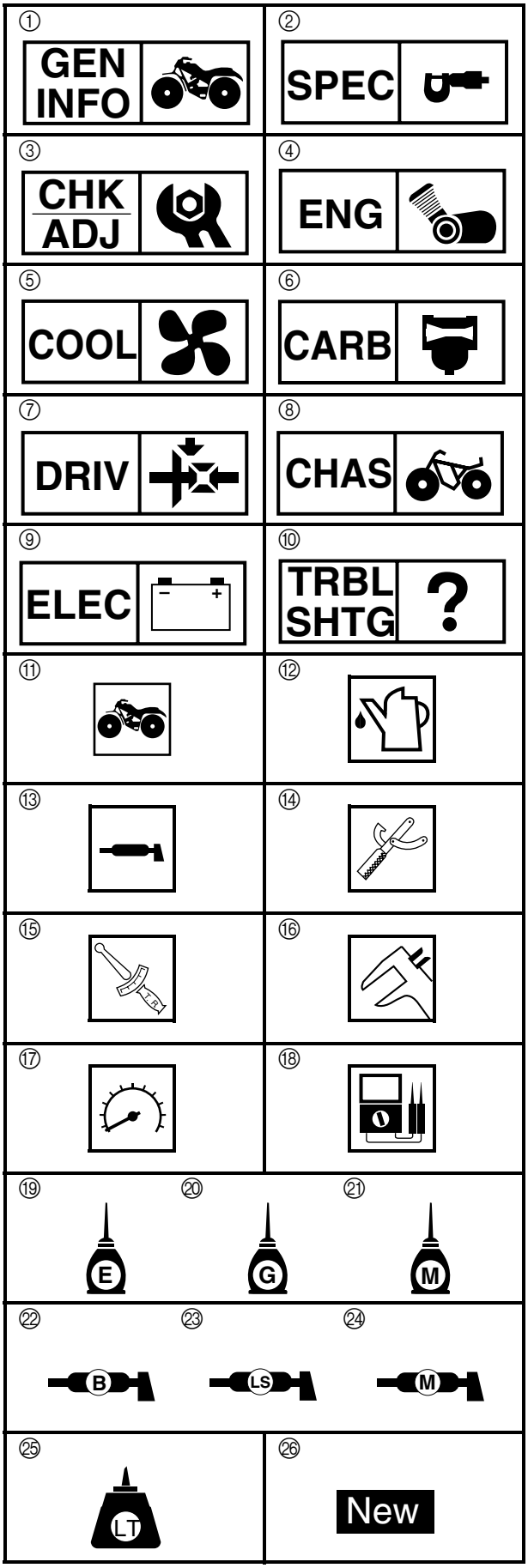

EB003000

ILLUSTRATED SYMBOLS

Illustrated symbols ① to ⑩ are printed on the top right of each page and indicate the subject of each chapter.

① General information
② Specifications
③ Periodic checks and adjustments
④ Engine
⑤ Cooling system
⑥ Carburetion
⑦ Drive train
⑧ Chassis
⑨ Electrical
⑩ Troubleshooting

Illustrated symbols ⑪ to ⑱ are used to identify the specifications appearing in the text.

⑪ Can be serviced with engine mounted
⑫ Filling fluid
⑬ Lubricant
⑭ Special tool
⑮ Torque
⑯ Wear limit, clearance
⑰ Engine speed
⑱ Ω, V, A

Illustrated symbols ⑲ to ㉔ in the exploded diagrams indicate the types of lubricants and lubrication points.

⑲ Apply engine oil
⑳ Apply gear oil
㉑ Apply molybdenum disulfide oil
㉒ Apply wheel bearing grease
㉓ Apply lightweight lithium-soap base grease
㉔ Apply molybdenum disulfide grease

Illustrated symbols ㉕ to ㉖ in the exploded diagrams indicate where to apply a locking agent ㉕ and when to install a new part ㉖.

㉕ Apply the locking agent (LOCTITE®)
㉖ Replace

Downloaded from www.Manualslib.com manuals search engine

Downloaded from www.Manualslib.com manuals search engine

TABLE OF CONTENTS

GENERAL INFORMATION	GEN INFO 1
SPECIFICATIONS	SPEC 2
PERIODIC CHECKS AND ADJUSTMENTS	CHK ADJ 3
ENGINE	ENG 4
COOLING SYSTEM	COOL 5
CARBURETION	CARB 6
DRIVE TRAIN	DRIV 7
CHASSIS	CHAS 8
ELECTRICAL	ELEC 9
TROUBLESHOOTING	TRBL SHTG 10

Downloaded from www.Manualslib.com manuals search engine

CONTENTS

CHAPTER 1.
GENERAL INFORMATION

MACHINE IDENTIFICATION 1-1
VEHICLE IDENTIFICATION NUMBER 1-1
MODEL LABEL 1-1

FEATURES 1-2
FRONT DIFFERENTIAL 1-2
TRANSMISSION 1-9

IMPORTANT INFORMATION 1-10
PREPARATION FOR REMOVAL PROCEDURES 1-10
REPLACEMENT PARTS 1-10
GASKETS, OIL SEALS AND O-RINGS 1-10
LOCK WASHERS/PLATES AND COTTER PINS 1-11
BEARINGS AND OIL SEALS 1-11
CIRCLIPS 1-11

CHECKING OF CONNECTIONS 1-12

SPECIAL TOOLS 1-13

CHAPTER 2.
SPECIFICATIONS

GENERAL SPECIFICATIONS 2-1

MAINTENANCE SPECIFICATIONS 2-4
ENGINE 2-4
CHASSIS 2-14
ELECTRICAL 2-18

HOW TO USE THE CONVERSION TABLE 2-20

GENERAL TORQUE SPECIFICATIONS 2-20

Downloaded from www.Manualslib.com manuals search engine

LUBRICATION POINTS AND LUBRICANT TYPES 2-21
ENGINE 2-21

COOLANT FLOW DIAGRAMS 2-22

OIL FLOW DIAGRAMS 2-24

CABLE ROUTING 2-27

CHAPTER 3.
PERIODIC CHECKS AND ADJUSTMENTS

INTRODUCTION 3-1

PERIODIC MAINTENANCE/LUBRICATION INTERVALS 3-1

SEAT, CARRIERS, FENDERS AND FUEL TANK 3-3
SEAT AND SIDE PANELS 3-3
FRONT CARRIER, FRONT BUMPER AND FRONT GRILL 3-4
HANDLEBAR COVER, FUEL TANK COVER AND FRONT FENDER . 3-5
REAR CARRIER AND REAR FENDER 3-7
ENGINE SKID PLATE (CENTER) AND ENGINE SKID PLATE (REAR) 3-9
FUEL TANK 3-10

FOOTREST BOARDS 3-12

ENGINE 3-13
ADJUSTING THE VALVE CLEARANCE 3-13
ADJUSTING THE TIMING CHAIN 3-16
ADJUSTING THE IDLING SPEED 3-16
ADJUSTING THE THROTTLE LEVER FREE PLAY 3-17
ADJUSTING THE SPEED LIMITER 3-19
ADJUSTING THE STARTER CABLE 3-21
CHECKING THE SPARK PLUG 3-22
CHECKING THE IGNITION TIMING 3-23
MEASURING THE COMPRESSION PRESSURE 3-24
CHECKING THE ENGINE OIL LEVEL 3-26
CHANGING THE ENGINE OIL 3-27
CLEANING THE AIR FILTER 3-29
CHECKING THE COOLANT LEVEL 3-31
CHANGING THE COOLANT 3-32
CHECKING THE COOLANT TEMPERATURE WARNING LIGHT 3-36
CHECKING THE V-BELT 3-36
CLEANING THE SPARK ARRESTER 3-37

Downloaded from www.Manualslib.com manuals search engine

CHASSIS 3-39
ADJUSTING THE REAR BRAKE 3-39
CHECKING THE BRAKE FLUID LEVEL 3-41
CHECKING THE FRONT BRAKE PAD 3-43
CHECKING THE REAR BRAKE PAD 3-43
CHECKING THE BRAKE HOSE 3-43
BLEEDING THE HYDRAULIC BRAKE SYSTEM 3-44
ADJUSTING THE SELECT LEVER CONTROL CABLE AND SHIFT ROD 3-46
ADJUSTING THE REAR BRAKE LIGHT SWITCH 3-47
CHECKING THE FINAL GEAR OIL LEVEL 3-48
CHANGING THE FINAL GEAR OIL 3-48
CHECKING THE DIFFERENTIAL GEAR OIL 3-49
CHANGING THE DIFFERENTIAL GEAR OIL 3-50
CHECKING THE CONSTANT VELOCITY JOINT DUST BOOT 3-51
CHECKING THE STEERING SYSTEM 3-51
ADJUSTING THE TOE-IN 3-51
ADJUSTING THE FRONT SHOCK ABSORBER 3-53
ADJUSTING THE REAR SHOCK ABSORBER 3-54
CHECKING THE TIRE 3-54
CHECKING THE WHEEL 3-56
CHECKING AND LUBRICATING THE CABLE 3-57
LUBRICATING THE LEVERS, PEDAL, ETC. 3-57

ELECTRICAL 3-58
CHECKING THE BATTERY 3-58
CHECKING THE FUSE 3-63
ADJUSTING THE HEADLIGHT BEAM 3-65
CHANGING THE HEADLIGHT BULB 3-65

CHAPTER 4.
ENGINE

ENGINE REMOVAL 4-1
AIR DUCTS, MUFFLER AND EXHAUST PIPE 4-1
SELECT LEVER UNIT AND COOLANT RESERVOIR 4-3
HOSES AND LEADS 4-4
ENGINE MOUNTING BOLTS 4-5
INSTALLING THE ENGINE 4-7

CYLINDER HEAD COVER 4-8
REMOVING THE CYLINDER HEAD COVER 4-10
CHECKING THE CYLINDER HEAD COVER 4-10
CHECKING THE TAPPET COVER 4-11
INSTALLING THE CYLINDER HEAD COVER 4-11

Downloaded from www.Manualslib.com manuals search engine

ROCKER ARMS 4-12
REMOVING THE ROCKER ARM 4-14
CHECKING THE ROCKER ARM 4-14
INSTALLING THE ROCKER ARM 4-15

CAMSHAFT AND CYLINDER HEAD 4-16
REMOVING THE CAMSHAFT AND CYLINDER HEAD 4-18
CHECKING THE CAMSHAFT 4-19
CHECKING THE CAMSHAFT SPROCKET 4-19
CHECKING THE DECOMPRESSION SYSTEM 4-19
CHECKING THE TIMING CHAIN GUIDE 4-20
CHECKING THE TIMING CHAIN TENSIONER 4-20
CHECKING THE CYLINDER HEAD 4-20
INSTALLING THE CAMSHAFT AND CYLINDER HEAD 4-21

VALVES AND VALVE SPRINGS 4-24
REMOVING THE VALVE AND VALVE SPRING 4-25
CHECKING THE VALVE AND VALVE SPRING 4-26
INSTALLING THE VALVE AND VALVE SPRING 4-30

CYLINDER AND PISTON 4-32
REMOVING THE PISTON 4-33
CHECKING THE CYLINDER AND PISTON 4-33
CHECKING THE PISTON RING 4-35
CHECKING THE PISTON PIN 4-36
INSTALLING THE PISTON 4-36
INSTALLING THE CYLINDER 4-37

RECOIL STARTER AND AC MAGNETO 4-38
REMOVING THE AC MAGNETO 4-41
DISASSEMBLING THE RECOIL STARTER 4-41
CHECKING THE AC MAGNETO 4-41
CHECKING THE STARTER CLUTCH 4-42
CHECKING THE STARTER PULLEY 4-43
CHECKING THE RECOIL STARTER 4-43
ASSEMBLEING THE RECOIL STARTER 4-43
INSTALLING THE AC MAGNETO 4-44

BALANCER GEARS AND OIL PUMP GEARS 4-47
REMOVING THE BALANCER DRIVE GEAR
AND BALANCER DRIVEN GEAR 4-48
REMOVING THE BALANCER DRIVE GEAR
AND BUFFER BOSS 4-48
CHECKING THE OIL PUMP DRIVE 4-48

Downloaded from www.Manualslib.com manuals search engine

CHECKING THE BALANCER DRIVE 4-49
INSTALLING THE BALANCER DRIVE GEAR
AND BALANCER DRIVEN GEAR 4-49

PRIMARY AND SECONDARY SHEAVES 4-51
PRIMARY SHEAVE 4-53
SECONDARY SHEAVE 4-54
REMOVING THE PRIMARY AND SECONDARY SHEAVES 4-55
DISASSEMBLING THE SECONDARY SHEAVE 4-55
CHEKING THE PRIMARY SHEAVE 4-56
CHECKING THE SECONDARY SHEAVE 4-56
ASSEMBLING THE PRIMARY SHEAVE 4-57
ASSEMBLING THE SECONDARY SHEAVE 4-57
INSTALLING THE PRIMARY AND SECONDARY SHEAVES 4-59

CLUTCH 4-60
REMOVING THE CLUTCH 4-62
CHECKING THE CLUTCH 4-62
INSTALLING THE CLUTCH 4-63

CRANKCASE 4-65
STARTER MOTOR, TIMING CHAIN AND OIL FILTER 4-65
CRANKCASE 4-67
CRANKCASE BEARING 4-68
SEPARATING THE CRANKCASE 4-69
CHECKING THE TIMING CHAIN AND GUIDE 4-69
CHECKING THE OIL DELIVERY PIPE 4-69
CHECKING THE CRANKCASE 4-70
CHECKING THE BEARINGS 4-70
ASSEMBLING THE CRANKCASE 4-70
INSTALLATING THE SHIFT LEVER 4-71

CRANKSHAFT AND OIL PUMP 4-72
OIL PUMP 4-73
REMOVING THE CRANKSHAFT 4-74
CHECKING THE OIL PUMP 4-74
CHECKING THE RELIEF VALVE 4-75
CHECKING THE OIL STRAINER 4-75
ASSEMBLING THE OIL PUMP 4-75
CHECKING THE CRANKSHAFT 4-76
INSTALLING THE CRANKSHAFT AND BALANCER 4-77

Downloaded from www.Manualslib.com manuals search engine

TRANSMISSION 4-78
REMOVING THE TRANSMISSION 4-81
CHECKING THE SHIFT FORK 4-81
CHECKING THE SHIFT CAM 4-82
CHECKING THE DRIVE AXLE 4-82
CHECKING THE HIGH WHEEL GEAR AND MIDDLE DRIVE GEAR 4-82
CHECKING THE SECONDARY SHAFT AND DRIVEN SPROCKET 4-83
CHECKING THE CHAIN 4-83
CHECKING THE STOPPER LEVER AND STOPPER WHEEL 4-83
ASSEMBLING THE SHIFT FORK ASSEMBLY 4-84
INSTALLING THE TRANSMISSION 4-84

MIDDLE GEAR 4-85
MIDDLE DRIVE SHAFT 4-85
MIDDLE DRIVEN SHAFT 4-86
REMOVING THE MIDDLE DRIVE SHAFT 4-88
REMOVING THE MIDDLE DRIVEN SHAFT 4-88
CHECKING THE PINION GEAR 4-91
MIDDLE DRIVE AND DRIVEN GEAR SHIM SELECTION 4-91
INSTALLING THE MIDDLE DRIVEN SHAFT 4-94
INSTALLING THE MIDDLE DRIVE SHAFT 4-96
MEASURING THE MIDDLE GEAR BACKLASH 4-97

CHAPTER 5.
COOLING SYSTEM

RADIATOR 5-1
CHECKING THE RADIATOR 5-3
INSTALLING THE RADIATOR 5-4

THERMOSTAT 5-5
CHECKING THE THERMOSTAT 5-6
INSTALLING THE THERMOSTAT 5-6

WATER PUMP 5-7
DISASSEMBLING THE WATER PUMP 5-9
CHECKING THE WATER PUMP 5-9
ASSEMBLING THE WATER PUMP 5-10

Downloaded from www.Manualslib.com manuals search engine

CHAPTER 6.
CARBURETION

CARBURETOR 6-1
DISASSEMBLING THE CARBURETOR 6-4
CHECKING THE CARBURETOR 6-4
ASSEMBLING THE CARBURETOR 6-6
ADJUSTING THE FUEL LEVEL 6-7

CHAPTER 7.
DRIVE TRAIN

TROUBLESHOOTING 7-1

FRONT CONSTANT VELOCITY JOINTS AND DIFFERENTIAL GEAR 7-4
DISASSEMBLING THE UNIVERSAL JOINT 7-9
REMOVING THE RING GEAR 7-10
CHECKING THE CONSTANT VELOCITY JOINT 7-10
CHECKING THE DIFFERENTIAL GEAR 7-10
CHECKING THE GEAR MOTOR 7-11
ASSEMBLING THE FRONT CONSTANT VELOCITY JOINT 7-11
ASSEMBLING THE DIFFERENTIAL GEAR 7-12
INSTALLING THE UNIVERSAL JOINT 7-14
MEASURING AND ADJUSTING THE DIFFERENTIAL GEAR LASH 7-15
CHECKING THE DIFFERENTIAL GEAR OPERATION 7-17

REAR CONSTANT VELOCITY JOINT/FINAL DRIVE GEAR AND DRIVE SHAFT 7-18
ASSEMBLING THE REAR CONSTANT VELOCITY JOINT 7-22
REMOVING AND DISASSEMBLING THE FINAL DRIVE ROLLER BEARING 7-23
POSITIONING THE FINAL DRIVE PINION GEAR AND RING GEAR 7-24
CHECKING THE DRIVE SHAFT 7-29
CHECKING THE FINAL DRIVE GEAR 7-29
MEASUREMENT AND ADJUSTING THE FINAL GEAR LASH 7-30
ASSEMBLING THE FINAL DRIVE GEAR 7-32
INSTALLING THE FINAL DRIVE GEAR 7-32

Downloaded from www.Manualslib.com manuals search engine

CHAPTER 8.
CHASSIS

FRONT WHEELS AND BRAKE DISCS 8-1
FRONT WHEELS 8-1
CHECKING THE FRONT WHEEL 8-3
CHECKING THE FRONT WHEEL HUB 8-3
CHECKING THE FRONT BRAKE DISC 8-4
INSTALLING THE FRONT WHEEL HUB 8-4
INSTALLING THE FRONT WHEEL 8-4

REAR WHEELS AND BRAKE DISC 8-6
REAR WHEELS 8-6
REAR BRAKE DISC 8-7
CHECKING THE REAR WHEEL 8-8
CHECKING THE REAR WHEEL HUB 8-8
CHECKING THE REAR BRAKE DISC 8-8
INSTALLING THE REAR WHEEL HUB 8-9
INSTALLING THE REAR WHEEL 8-9

FRONT AND REAR BRAKES 8-10
FRONT BRAKE PADS 8-10
REAR BRAKE PADS 8-11
REPLACING THE FRONT BRAKE PAD 8-12
REPLACING THE REAR BRAKE PAD 8-14
FRONT BRAKE MASTER CYLINDER 8-16
REAR BRAKE MASTER CYLINDER 8-18
CHECKING THE MASTER CYLINDER 8-21
ASSEMBLING THE FRONT BRAKE MASTER CYLINDER 8-22
ASSEMBLING THE REAR BRAKE MASTER CYLINDER 8-22
INSTALLING THE FRONT BRAKE MASTER CYLINDER 8-23
INSTALLING THE REAR BRAKE MASTER CYLINDER 8-24
FRONT BRAKE CALIPER 8-26
REAR BRAKE CALIPER 8-28
DISASSEMBLING THE BRAKE CALIPER 8-30
DISASSEMBLING THE REAR BRAKE CALIPER 8-30
CHECKING THE FRONT AND REAR BRAKE CALIPER 8-31
ASSEMBLING THE FRONT BRAKE CALIPER 8-32
INSTALLING THE FRONT BRAKE CALIPER 8-32
ASSEMBLING THE REAR BRAKE CALIPER 8-34
INSTALLING THE REAR BRAKE CALIPER 8-35

Downloaded from www.Manualslib.com manuals search engine

STEERING SYSTEM 8-36
HANDLEBAR 8-36
REMOVING THE REAR BRAKE SWITCH 8-37
CHECKING THE HANDLEBAR 8-37
INSTALLING THE HANDLEBAR 8-37
INSTALLING THE REAR BRAKE LEVER 8-37
INSTALLING THE MASTER CYLINDER ASSEMBLY 8-38
STEERING STEM 8-39
REMOVING THE BEARING RETAINER 8-41
CHECKING THE STEERING STEM 8-41
INSTALLING THE BEARING RETAINER 8-41
INSTALLING THE STEERING STEM 8-41
INSTALLING THE CABLE GUIDE 8-42
TIE ROD AND STEERING KNUCKLE 8-43
REMOVING THE STEERING KNUCKLE 8-44
CHECKING THE TIE ROD 8-44
CHECKING THE STEERING KNUCKLE 8-44
CHECKING THE BALL JOINT 8-45
CHECKING THE TIE ROD 8-45

FRONT ARMS AND FRONT SHOCK ABSORBER 8-46
REMOVING THE FRONT ARMS 8-48
CHECKING THE FRONT ARM 8-48
CHECKING THE FRONT SHOCK ABSORBER 8-48
INSTALLING THE FRONT ARMS
AND FRONT SHOCK ABSORBER 8-49

REAR KNUCKLE AND STABILIZER 8-50
CHECKING THE REAR KNUCKLE 8-51
CHECKING THE STABILIZER 8-51

REAR ARMS AND REAR SHOCK ABSORBER 8-52
CHECKING THE REAR ARM 8-53
CHECKING THE REAR SHOCK ABSORBER 8-53
CHECKING THE REAR ARMS
AND REAR SHOCK ABSORBER 8-53

Downloaded from www.Manualslib.com manuals search engine

CHAPTER 9.
ELECTRICAL

ELECTRICAL COMPONENTS 9-1

CHECKING THE SWITCH 9-2
- CHECKING THE SWITCH 9-2
- CHECKING A SWITCH SHOWN IN THE MANUAL 9-2
- CHECKING THE SWITCH CONTINUITY 9-4

CHECKING THE BULBS AND BULB SOCKETS 9-6
- TYPES OF BULBS 9-6
- CHECKING THE CONDITION OF THE BULBS 9-6
- CHECKING THE CONDITION OF THE BULB SOCKETS 9-8
- CHECKING THE LEDs 9-8

IGNITION SYSTEM 9-9
- CIRCUIT DIAGRAM 9-9
- TROUBLESHOOTING 9-10

ELECTRIC STARTING SYSTEM 9-15
- CIRCUIT DIAGRAM 9-15
- STARTING CIRCUIT OPERATION 9-16
- TROUBLESHOOTING 9-17

9-21
- STARTER MOTOR 9-21
- CHECKING THE STARTER MOTOR 9-22
- ASSEMBLING THE STARTER MOTOR 9-23

CHARGING SYSTEM 9-24
- CIRCUIT DIAGRAM 9-24
- TROUBLESHOOTING 9-25

LIGHTING SYSTEM 9-27
- CIRCUIT DIAGRAM 9-27
- TROUBLESHOOTING 9-28
- CHECKING THE LIGHTING SYSTEM 9-30

SIGNAL SYSTEM 9-32
- CIRCUIT DIAGRAM 9-32
- TROUBLESHOOTING 9-34
- CHECKING THE SIGNAL SYSTEM 9-36

Downloaded from www.Manualslib.com manuals search engine

COOLING SYSTEM 9-47
CIRCUIT DIAGRAM 9-47
TROUBLESHOOTING 9-48

2WD/4WD SELECTING SYSTEM 9-52
CIRCUIT DIAGRAM 9-52
TROUBLESHOOTING 9-53

CHAPTER 10. TROUBLESHOOTING

STARTING FAILURE/HARD STARTING 10-1
FUEL SYSTEM 10-1
ELECTRICAL SYSTEM 10-1
COMPRESSION SYSTEM 10-2

POOR IDLE SPEED PERFORMANCE 10-2
POOR IDLE SPEED PERFORMANCE 10-2

POOR MEDIUM AND HIGH-SPEED PERFORMANCE 10-2
POOR MEDIUM AND HIGH-SPEED PERFORMANCE 10-2

FAULTY DRIVE TRAIN 10-3

FAULTY GEAR SHIFTING 10-4
HARD SHIFTING 10-4
SHIFT LEVER DOES NOT MOVE 10-4
JUMPS OUT OF GEAR 10-4

FAULTY CLUTCH PERFORMANCE 10-4
ENGINE OPERATES BUT MACHINE WILL NOT MOVE 10-4
CLUTCH SLIPPING 10-4
POOR STARTING PERFORMANCE 10-4
POOR SPEED PERFORMANCE 10-5

OVERHEATING 10-5
OVERHEATING 10-5

FAULTY BRAKE 10-5
POOR BRAKING EFFECT 10-5

Downloaded from www.Manualslib.com manuals search engine

SHOCK ABSORBER MALFUNCTION 10-6
MALFUNCTION 10-6

UNSTABLE HANDLING 10-6
UNSTABLE HANDLING 10-6

LIGHTING SYSTEM 10-6
HEADLIGHT DARK 10-6
BULB BURNT OUT 10-6

Downloaded from www.Manualslib.com manuals search engine

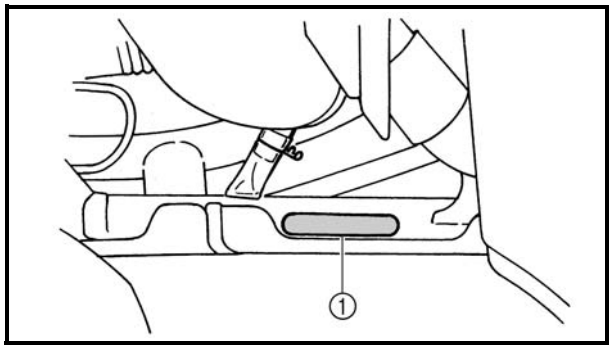

GENERAL INFORMATION

MACHINE IDENTIFICATION

VEHICLE IDENTIFICATION NUMBER

The vehicle identification number ① is stamped into the left side of the frame.

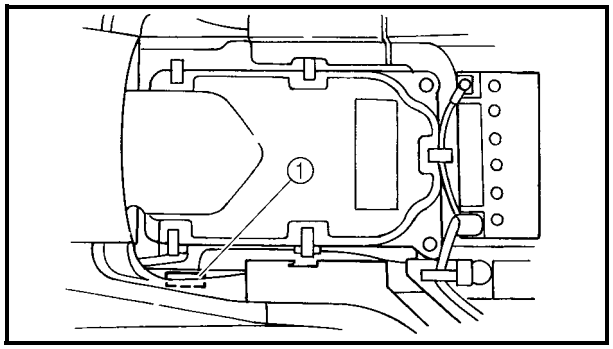

MODEL LABEL

The model label ① is affixed to the frame. This information will be needed to order spare parts.

Downloaded from www.Manualslib.com manuals search engine

FEATURES

FRONT DIFFERENTIAL

① Adapter
② Drive clutch
③ Differential side gear (left)
④ Differential pinion gear
⑤ Ring gear
⑥ Differential side gear (right)
⑦ Drive pinion gear
⑧ Gear motor

A To front wheel
B From the middle gear

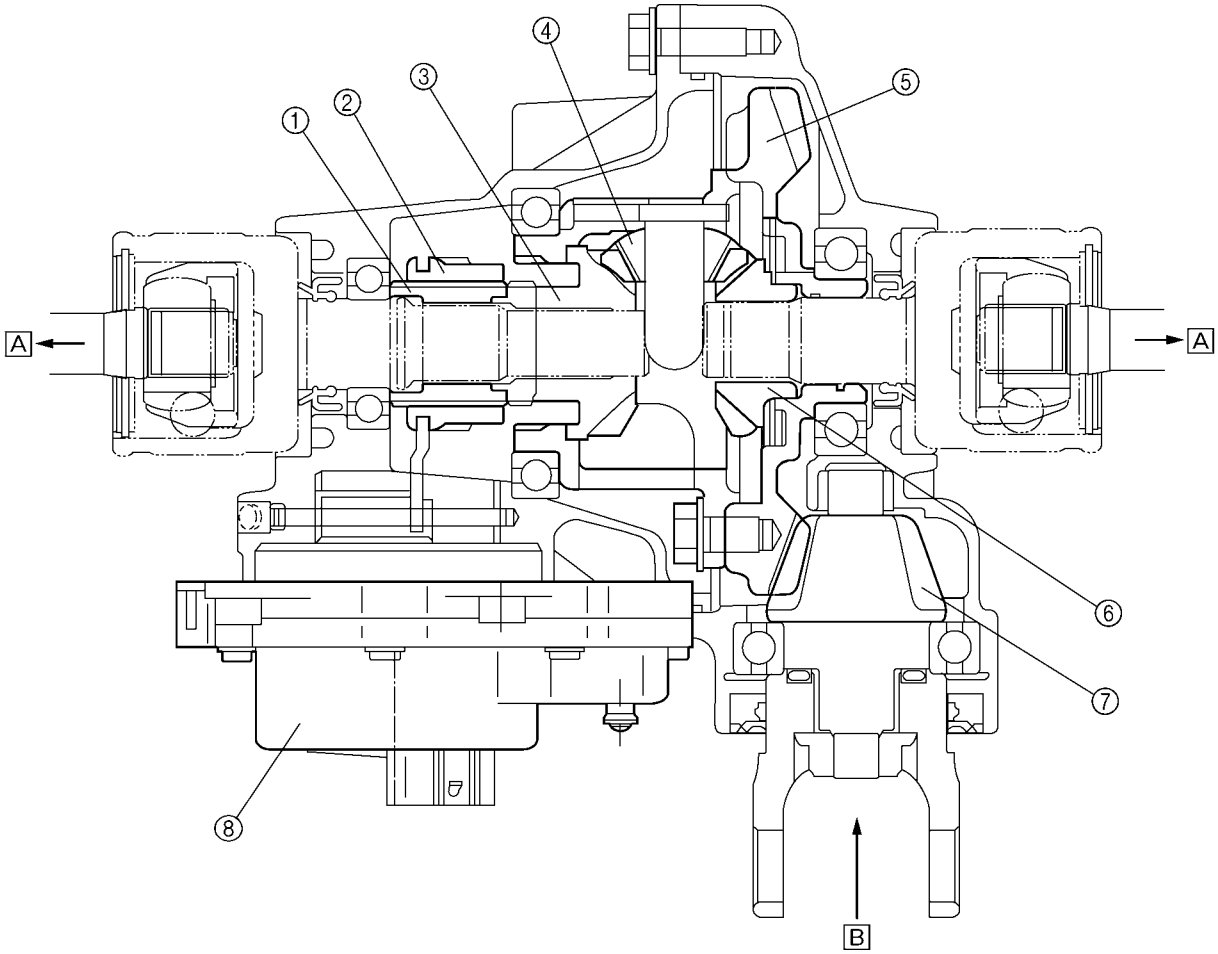

Downloaded from www.Manualslib.com manuals search engine

2WD

Power is transmitted as follows: middle gear → front drive shaft → drive pinion gear ⑦ → ring gear ⑤ → differential pinion gear ④. In the 2WD mode, the left differential side gear ③ and the drive clutch ② are not engaged, therefore, the left side gear runs idle and does not transmit power to the left front constant velocity joint.

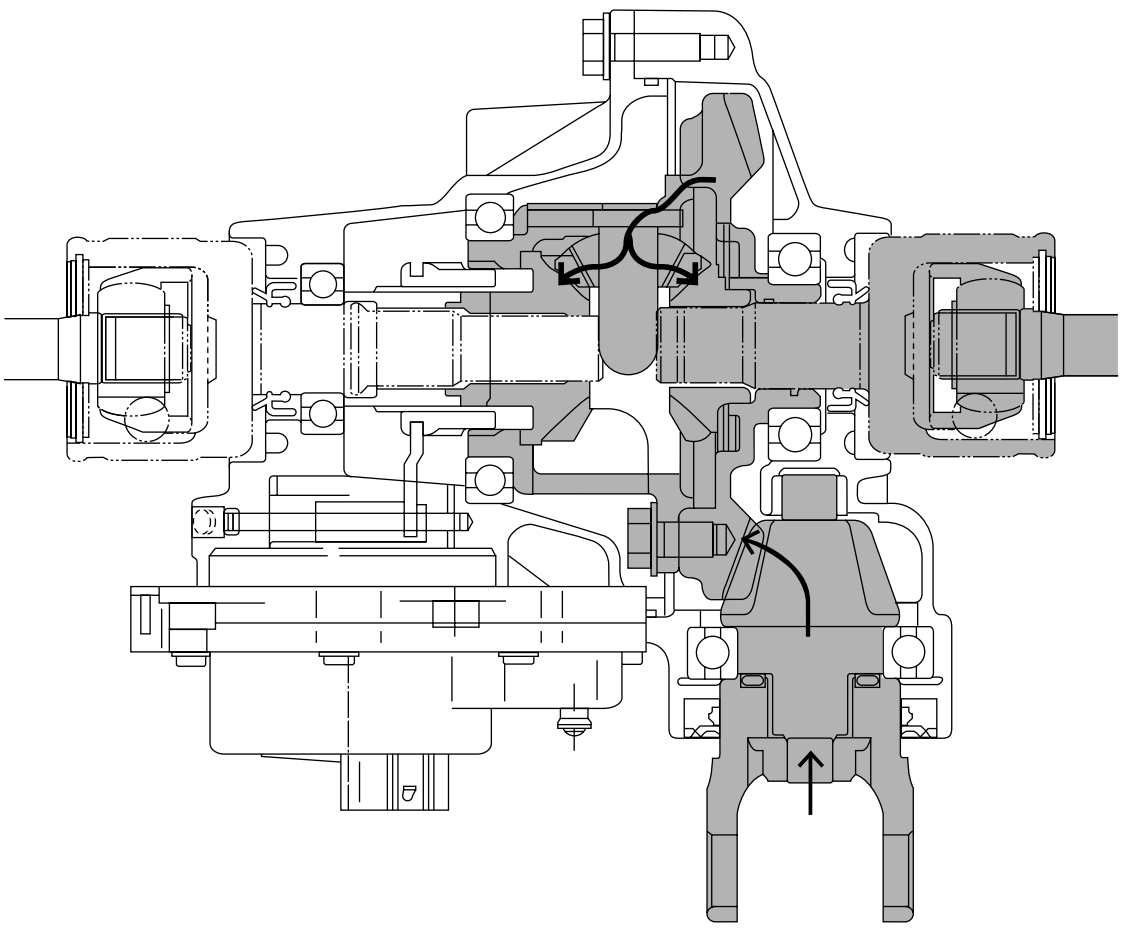

Downloaded from www.Manualslib.com manuals search engine

4WD

When the 4WD mode is selected, the gear motor is operated, and the drive clutch ② moves to the right and engages with the left differential side gear ③. Accordingly, power is transmitted as follows: ring gear ⑤ → differential pinion gear ④ → left differential side gear ③ → drive clutch ② → adapter ① → left front constant velocity joint.

Meanwhile, power from the differential pinion gear ④ is transmitted to the right front constant velocity joint via the right differential side gear ⑥.

The ring gear ⑤ and the drive clutch ② are not engaged at this time. Therefore, the rotational difference that occurs between the right and left wheels, while the handlebar is being turned, is absorbed by the difference in the rotational speeds of the ring gear ⑤ and the left differential side gear ③.

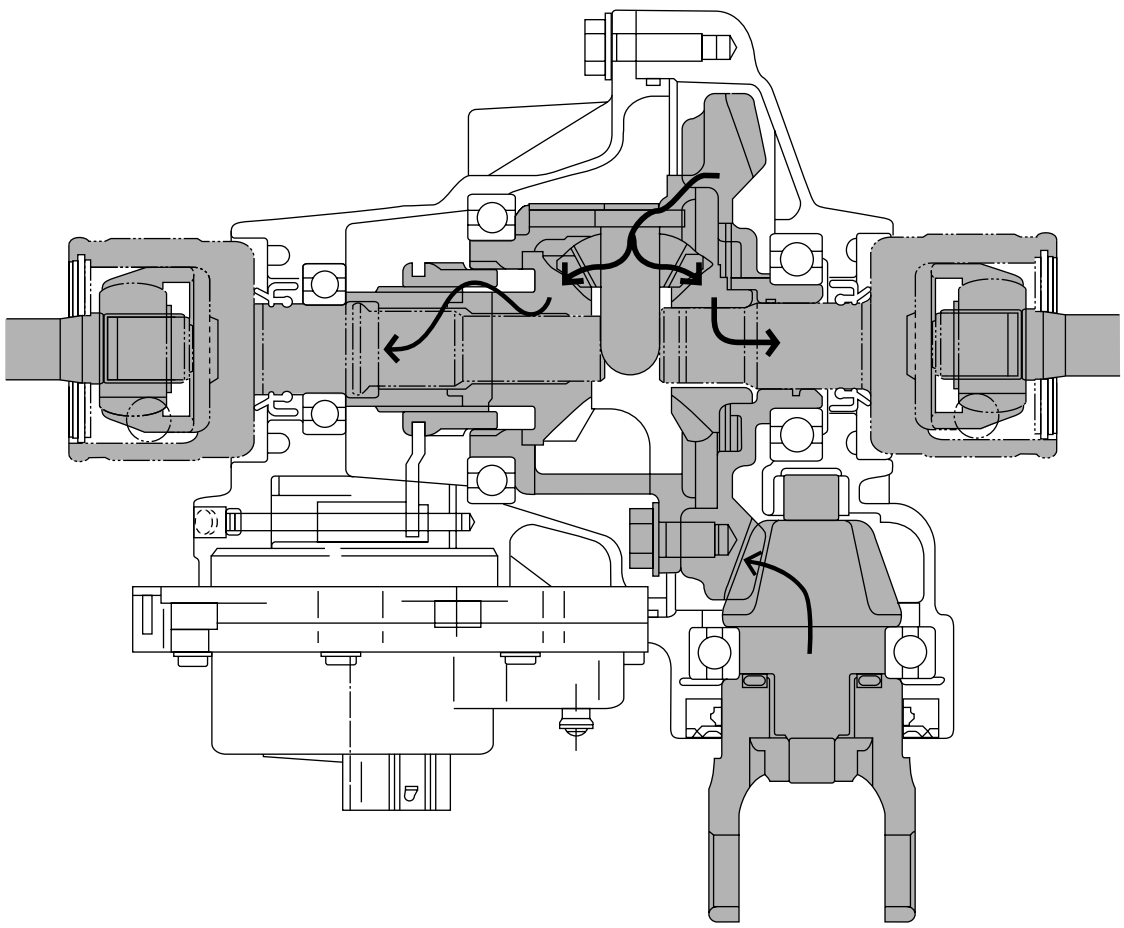

Downloaded from www.Manualslib.com manuals search engine

4WD (Diff-Lock)

When the 4WD (Diff-Lock) mode is selected, the gear motor moves the drive clutch ② further to the right, which causes the ring gear ⑤ and the drive clutch ② to engage. As a result, power is transmitted directly from the ring gear ⑤ to the drive clutch ②, then to the left front constant velocity joint via the adapter ①.

Meanwhile, because the ring gear ⑤ and the drive clutch ② are engaged, the ring gear ⑤, the drive clutch ②, and the right differential side gear ⑥ become locked coaxially. Thus, power is transmitted as follows: differential pinion gear ④ → right differential pinion gear ⑥ → right front constant velocity joint.

When the ATV is in the 4WD (Diff-Lock) mode, the right and left wheels rotate constantly at the same speed, which affects the maneuverability of the ATV (e.g., making it difficult to steer). Therefore, the maximum traveling speed is limited to 35 km/h (22 mph).

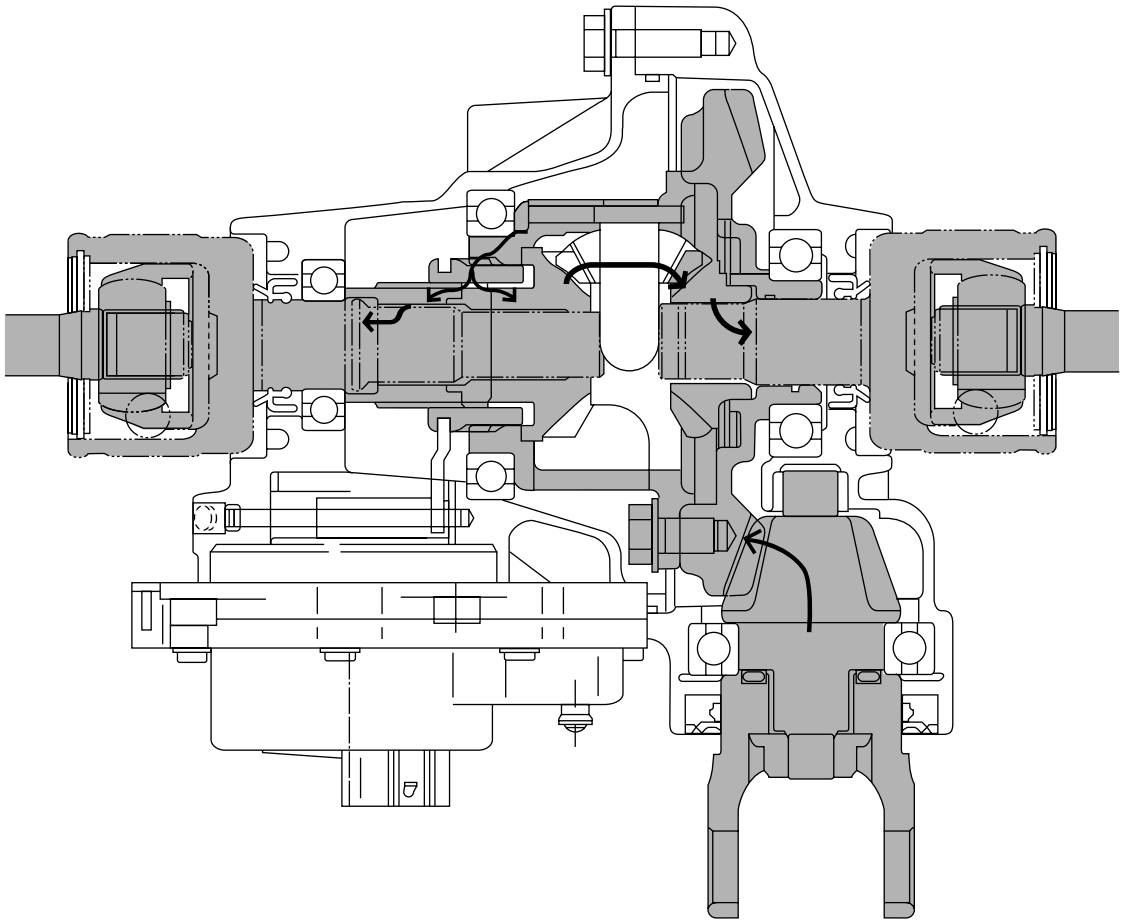

Downloaded from www.Manualslib.com manuals search engine

In addition, the 4WD (Diff-Lock) mode can be engaged only when the ATV is stopped. Even if an attempt is made to select this mode when the ATV is traveling, it will only result in a standby condition (i.e., when the differential lock select switch and the differential gear are not matched).

(1) When the ATV is traveling

Even if the 4WD (Diff-Lock) mode is selected, the gear motor will stand by, instead of operating. Therefore, the ATV can be driven in the normal 4WD mode. When this occurs, the differential gear lock indicator light " " in the speedometer unit will flash to alert the driver that the control is on standby. When the ATV is stopped, the control transfers to the condition described in (2).

(2) When the ATV is stopped

The gear motor operates to connect the drive clutch to the differential case, thus resulting in the differential lock condition. When this occurs, the differential gear lock indicator light " " in the speedometer unit changes to a constant illumination.

* Until the drive clutch and the differential case mesh together (i.e., the splines are unmeshed) the engine misfires to control the engine speed. During this time, the differential gear lock indicator light in the speedometer unit continues to flash.

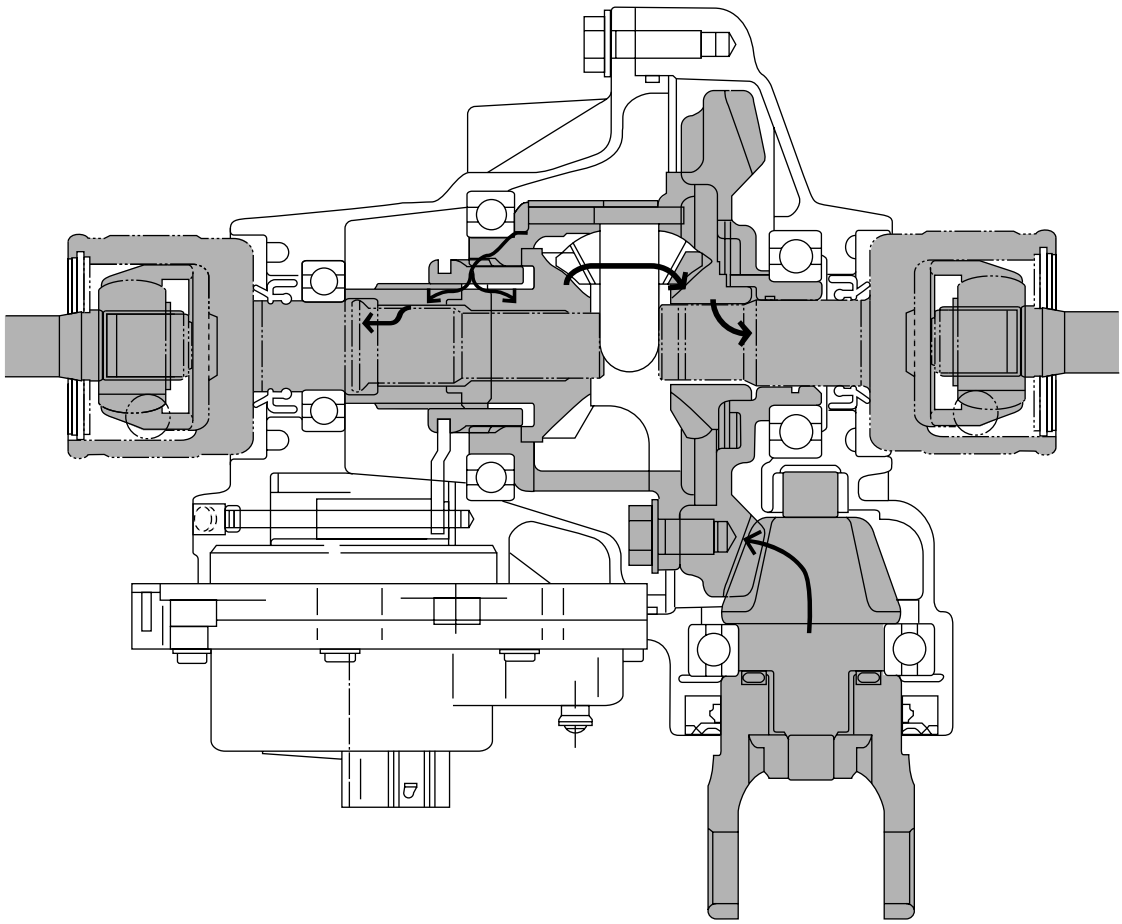

Downloaded from www.Manualslib.com manuals search engine

Shift mechanism

A new shift mechanism with a parking position has been added to the YFM660F.

1.Shift cam
2.Shift fork guide bar
3.Drive axle
4.Stopper lever shaft

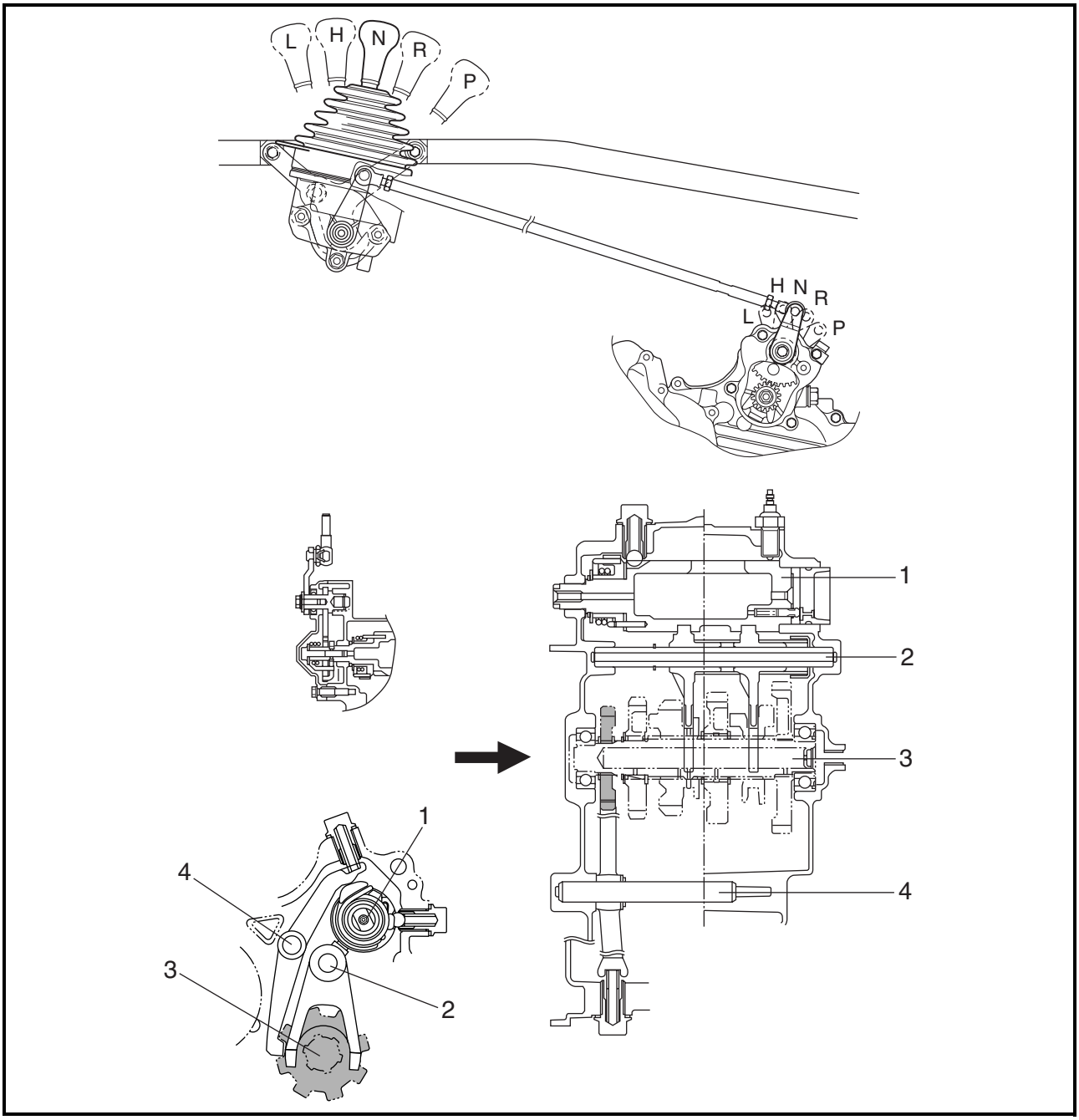

Downloaded from www.Manualslib.com manuals search engine

Parking

(1) L (Low), H (High), N (Neutral), and R (Reverse) positions
The end of the stopper lever is held by the return spring ①. Then, the stopper lever tab is separated from the drive axle stopper to free the drive axle.

(2) P (Park) position
When the drive select lever is shifted to the “P” position, the cam lever of the shift cam pushes up on the end of the stopper lever. Then, the stopper lever tab pushes against the drive axle stopper to lock the drive axle.

(3) Not synchronized
If the stopper lever tab and the drive axle stopper are not synchronized, the torsion spring is compressed. As a result, the spring pushes the stopper lever tab against the drive axle stopper and waits until the synchronization is completed. When the stop lever tab and the drive axle are synchronized, the stop lever tab pushes against the drive axle stopper in order to lock the drive axle.

1 Stopper lever
2 Return spring
3 Shift cam
4 Drive axle

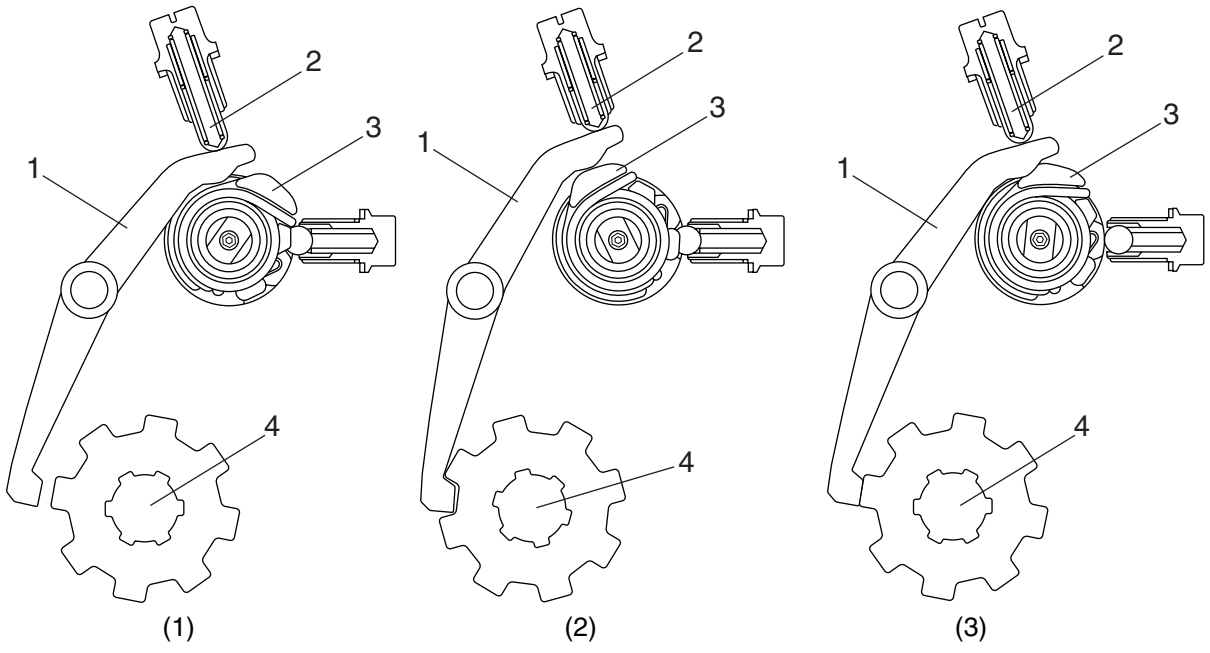

Downloaded from www.Manualslib.com manuals search engine

TRANSMISSION

To create a compact, 3-axle transmission, a chain drive has been adopted for the reverse transmission.

① Secondary shaft
② Drive axle
③ Middle drive shaft
④ Low wheel gear
⑤ Chain

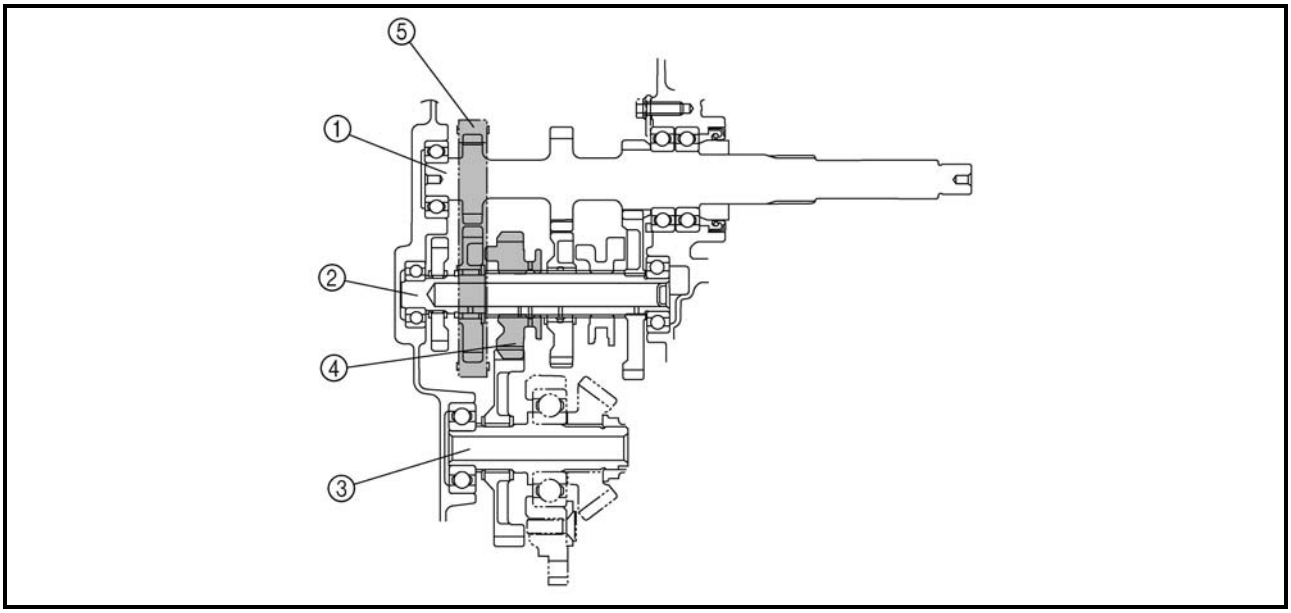

① Secondary shaft
② Drive axle

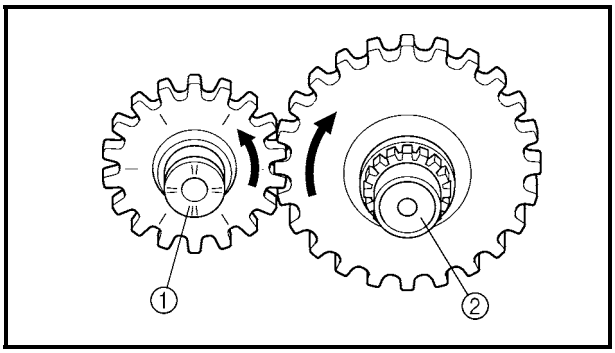

L (Low) or H (High) mode

When the transmission is in either the low or high mode, the drive axle is driven via the secondary shaft and gear. Therefore, the rotation of the drive axle is the opposite of the secondary shaft.

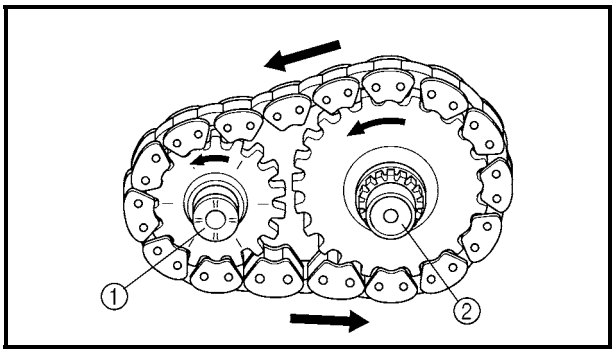

R (Reverse) mode

When the transmission is in the reverse mode, the drive axle is driven via the drive chain. Therefore, the rotation of the drive axle is the same as the secondary shaft. (As a result, the rotation of the drive axle is opposite to that of the low and high modes.)

Downloaded from www.Manualslib.com manuals search engine

EB101000

IMPORTANT INFORMATION

PREPARATION FOR REMOVAL PROCEDURES

1. Remove all dirt, mud, dust and foreign material before removal and disassembly.
2. Use proper tools and cleaning equipment. Refer to the “SPECIAL TOOLS” section.
3. When disassembling the machine, always keep mated parts together. This includes gears, cylinder, piston and other parts that have been “mated” through normal wear. Mated parts must always be reused or replaced as an assembly.
4. During machine disassembly, clean all parts and place them in trays in the order of disassembly. This will speed up assembly and allow for the correct installation of all parts.
5. Keep all parts away from any source of fire.

EB101010

REPLACEMENT PARTS

1. Use only genuine Yamaha parts for all replacements. Use oil and grease recommended by Yamaha for all lubrication jobs. Other brands may be similar in function and appearance, but inferior in quality.

EB101020

GASKETS, OIL SEALS AND O-RINGS

1. Replace all gaskets, seals and O-rings when overhauling the engine. All gasket surfaces, oil seal lips and O-rings must be cleaned.
2. Properly oil all mating parts and bearings during reassembly. Apply grease to the oil seal lips.

Downloaded from www.Manualslib.com manuals search engine

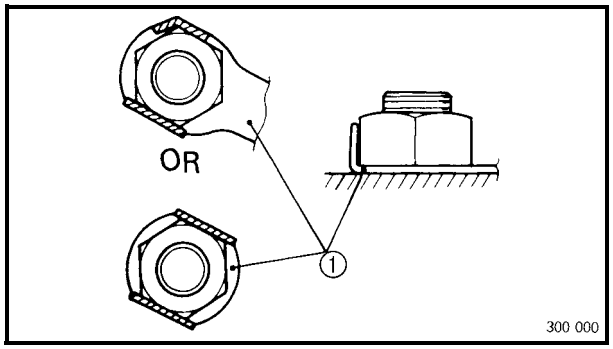

EB101030
LOCK WASHERS/PLATES AND COTTER PINS

1. Replace all lock washers/plates ① and cotter pins after removal. Bend lock tabs along the bolt or nut flats after the bolt or nut has been tightened to specification.

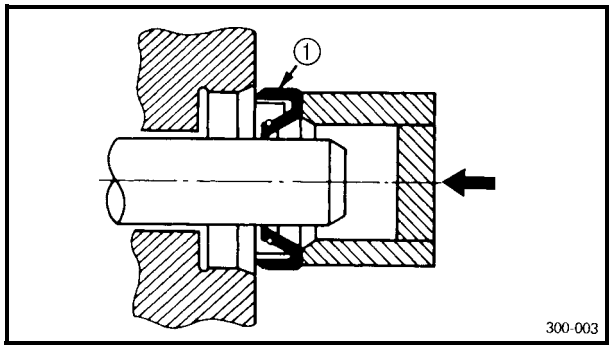

EB101040
BEARINGS AND OIL SEALS

1. Install bearings and oil seals so that the manufacturer's marks or numbers are visible. When installing oil seals, apply a light coating of lightweight lithium base grease to the seal lips. Oil bearings liberally when installing, if appropriate.

① Oil seal

CAUTION:

Do not use compressed air to spin the bearings dry. This will damage the bearing surfaces.

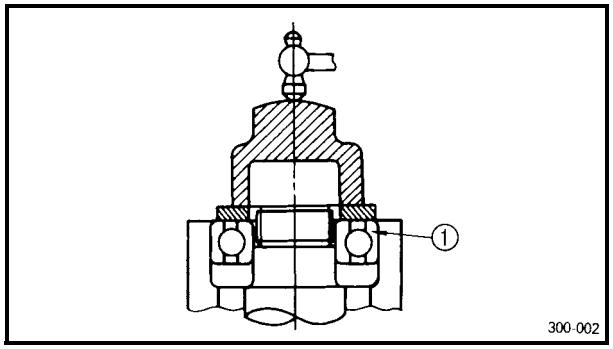

① Bearing

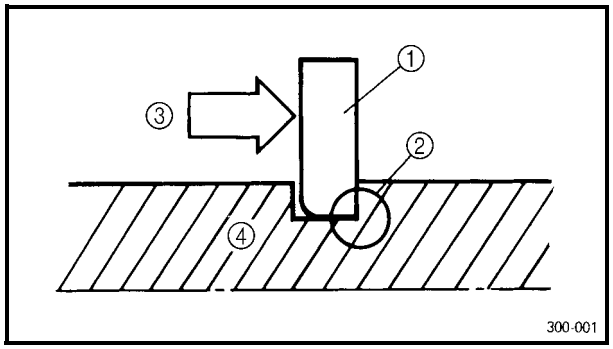

EB101050
CIRCLIPS

1. Check all circlips carefully before reassembly. Always replace piston pin clips after one use. Replace distorted circlips. When installing a circlip ①, make sure that the sharp-edged corner ② is positioned opposite the thrust ③ it receives. See sectional view.

④ Shaft

Downloaded from www.Manualslib.com manuals search engine

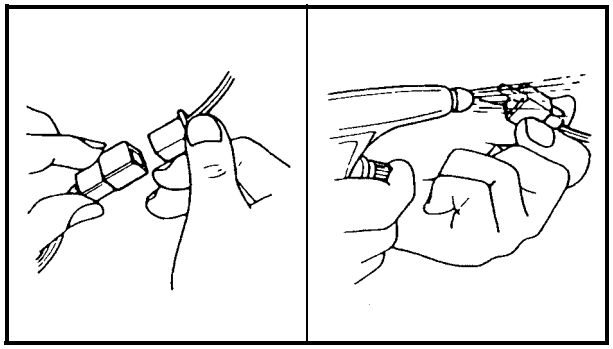

EB801000

CHECKING OF CONNECTIONS

Check the connectors for stains, rust, moisture, etc.

1.Disconnect:
- Connector

2.Check:
- Connector
  Moisture → Dry each terminal with an air blower.
  Stains/rust → Connect and disconnect the terminals several times.

3.Check:
- Connector leads
  Looseness → Bend up the pin ① and connect the terminals.

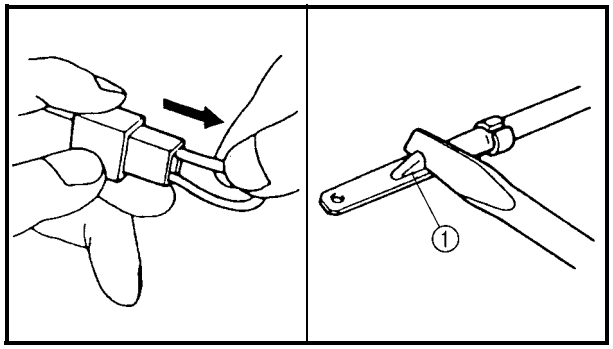

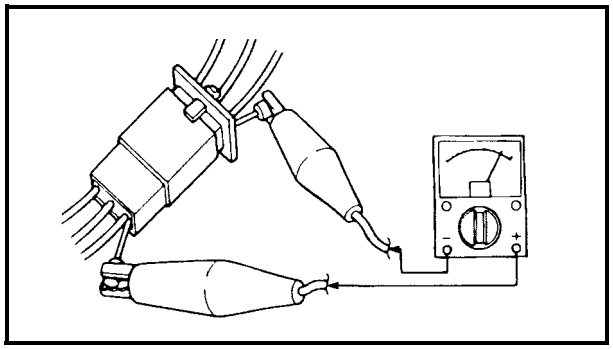

4.Connect:
- Connector terminals

NOTE:
The two terminals “click” together.

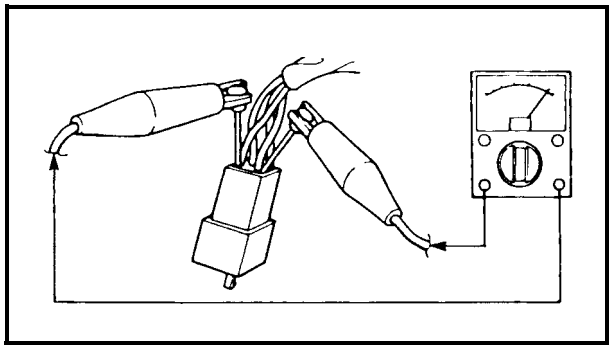

5.Check:
- Continuity (using a pocket tester)

NOTE:
- If there is no continuity, clean the terminals.
- When checking the wire harness be sure to perform steps 1 to 3.
- As a quick remedy, use a contact revitalizer available at most part stores.
- Check the connector with a pocket tester as shown.

Downloaded from www.Manualslib.com manuals search engine

EB102001

SPECIAL TOOLS

The following special tools are necessary for complete and accurate tune-up and assembly. Use only the appropriate special tools; this will help prevent damage caused by the use of inappropriate tools or improvised techniques. Special tools may differ by shape and part number from country to country. In such a case, two types are provided.
When placing an order, refer to the list provided below to avoid any mistakes.

For US and CDN
P/N. YM-, YU-, YS-, YK-, ACC-
Except for US and CDN
P/N. 90890-

Tool No.	Tool name/How to use	Illustration
90890-01309	Spacer This tool is used to install the crankshaft.	
Bolt 90890-01083 Weight 90890-01084 Set YU-01083-A	Slide hammer bolt (M6)/weight/set These tools are used to remove the rocker arm shaft.	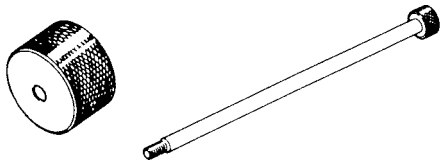
90890-01135 YU-01135-A	Crankcase separating tool This tool is used to separate the crankcase.	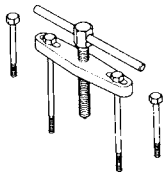
90890-01229 YM-01230	Coupling gear/middle shaft tool This tool is needed when removing or installing the coupling gear nut.	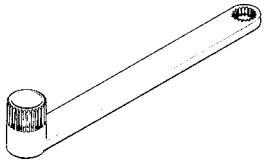
90890-01231 YM-01231	Gear lash measurement tool This tool is used to removing or installing the coupling gear nut.	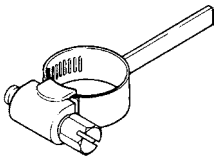
90890-01235 YU-01235	Rotor holding tool This tool is needed to hold the starter puller when removing/installing the starter puller bolt or camshaft sprocket bolts.	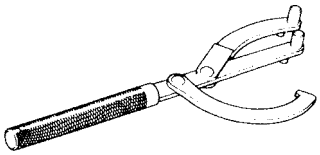
Pot 90890-01274 Bolt 90890-01275	Crankshaft installer pot Crankshaft installer bolt These tools are used to install the crankshaft.	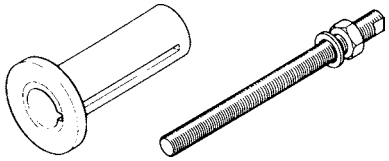

Downloaded from www.Manualslib.com manuals search engine

Tool No.	Tool name/How to use	Illustration
90890-01304 YU-01304	Piston pin puller This tool is used to remove the piston pin.	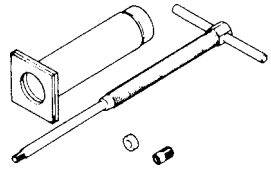
90890-01311 YU-08035	Tappet adjusting tool (3 mm) This tool is necessary for adjusting the valve clearance.	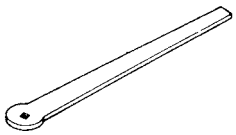 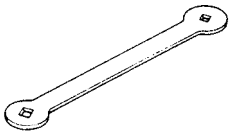
90890-01312 YM-01312-A	Fuel level gauge This gauge is used to measure the fuel level in the float chamber.	
90890-01325 YU-24460-01	Radiator cap tester This tool is used to check the cooling system.	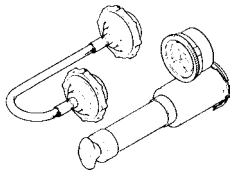
90890-01327 YM-01327	Damper rod holder (30 mm) This tool is needed to loosen and tighten the steering stem bearing retainer.	
90890-01348	Locknut wrench This tool is needed when removing or installing the secondary sheave spring.	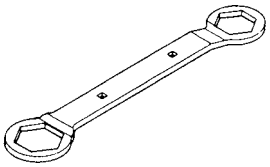
90890-01352 YU-33984	Radiator cap tester adapter This tool is used to check the cooling system.	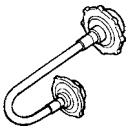
90890-01404 YM-01404	Flywheel puller These tools are needed to remove the rotor.	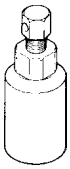
90890-01426 YU-38411	Oil filter wrench This tool is needed to loosen or tighten the oil filter cartridge.	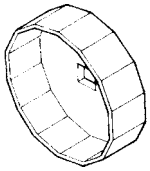

Downloaded from www.Manualslib.com manuals search engine

Tool No.	Tool name/How to use	Illustration
90890-01430 YM-38404	Ring nut wrench This tool is needed to removing and installing the middle driven shaft bearing retainer.	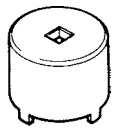
90890-01467 YM-01467	Gear lash measurement tool This tool is used to measure the gear lash.	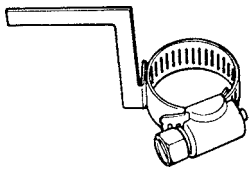
90890-01701 YU-01880	Sheave holder This tool is needed to hold the primary sheave when removing or installing the sheave bolts.	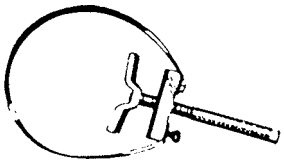
Set 90890-03081 YU-33223 Adapter 90890-04082 YU-33223-3	Compression gauge Adapter (Compression gauge) These tools are needed to measure engine compression.	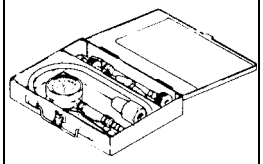 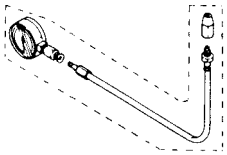
90890-03112 YU-03112	Pocket tester This instrument is needed for checking the electrical system.	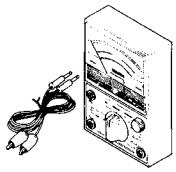
90890-03113	Engine tachometer This tool is needed for observing engine rpm.	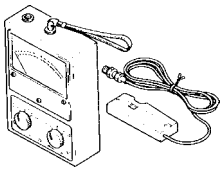
90890-03141 YM-33277-A	Timing light This tool is necessary for checking ignition timing.	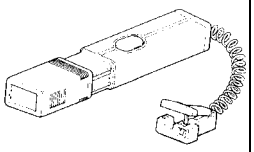 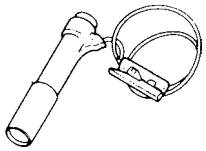
Compressor 90890-04019 YM-04019 Attachment 90890-01243	Valve spring compressor Valve spring compressor attachment This tool is needed to remove and install the valve assemblies.	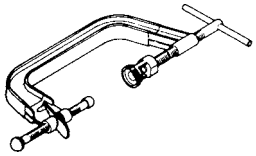
Middle driven shaft bearing driver 90890-04058 YM-04058-1 Mechanical seal installer 90890-04078 YM-33221	Middle driven shaft bearing driver Mechanical seal installer These tools are used to install the water pump seal.	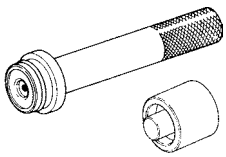

Downloaded from www.Manualslib.com manuals search engine

Tool No.	Tool name/How to use	Illustration
Adapter 90890-04059 YM-90069 Spacer 90890-04081 YM-91044	Adapter Spacer (crankshaft installer) These tools are used to install the crankshaft.	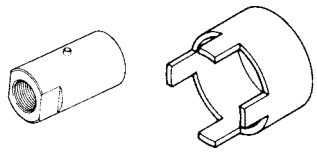
90890-04062 YM-04062	Universal joint holder This tool is needed when removing or installing the universal joint yoke nut.	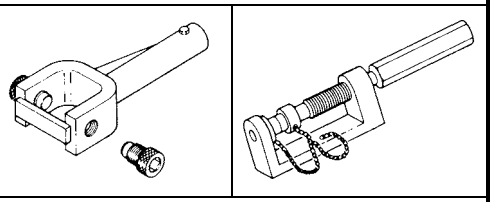
90890-04064 YM-04064-A	Valve guide remover (ø 6) This tool is needed to remove and install the valve guide.	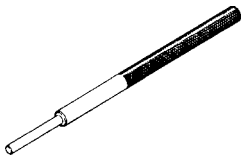
90890-04065 YM-04065-A	Valve guide installer (ø 6) This tool is needed to install the valve guide.	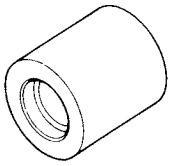
90890-04066 YM-04066	Valve guide reamer (ø 6) This tool is needed to rebore the new valve guide.	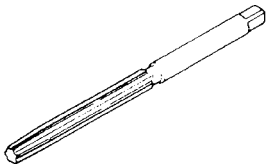
90890-04086 YM-91042	Universal clutch holder This tool is needed to hold the clutch carrier when removing or installing the carrier nut.	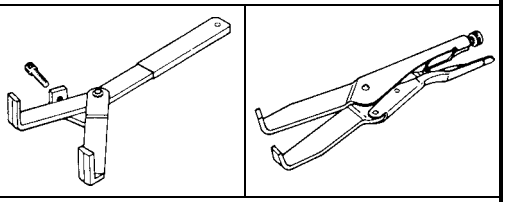
90890-04128 YM-04128	Bearing retainer wrench This tool is needed when removing or installing the middle driven pinion gear bearing retainer.	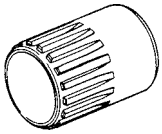
90890-04134 YM-04134	Sheave spring compressor This tool is needed when removing or installing the secondary sheave spring.	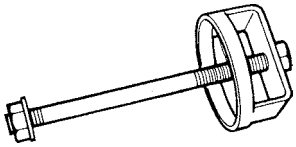
90890-04135 YM-04135	Sheave fixed block This tool is needed when removing or installing the secondary sheave spring.	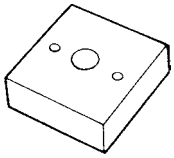

Downloaded from www.Manualslib.com manuals search engine

Tool No.	Tool name/How to use	Illustration
90890-06754	Ignition checker This instrument is necessary for checking the ignition system components.	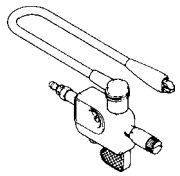
Bond 90890-85505 Sealant ACC-11001-05-01	Yamaha bond No. 1215 Sealant (Quick Gasket®) This sealant (bond) is used on crankcase mating surfaces, etc.	
YM-34487	Dynamic spark tester This instrument is necessary for checking the ignition system components.	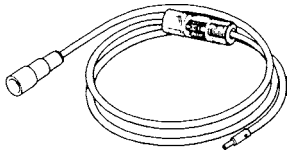
YU-8036-A	Inductive tachometer This tool is needed for observing engine rpm.	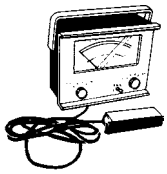
YU-90050	Crankshaft installer set These tools are used to install the crankshaft.	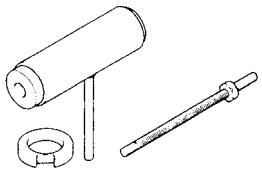

Downloaded from www.Manualslib.com manuals search engine

SPECIFICATIONS

GENERAL SPECIFICATIONS

Item	Standard
Model code:	5KM1 5KM5
Dimensions:	
Overall length	2,085 mm (82.1 in)
Overall width	1,150 mm (45.3 in)
Overall height	1,210 mm (47.6 in)
Seat height	880 mm (34.6 in)
Wheelbase	1,275 mm (50.2 in)
Minimum ground clearance	275 mm (10.83 in)
Minimum turning radius	3,200 mm (126 in)
Basic weight:	
With oil and full fuel tank	290 kg (639 lb)
Engine:	
Engine type	Liquid-cooled 4-stroke, SOHC
Cylinder arrangement	Forward-inclined single cylinder
Displacement	660 cm^3
Bore × stroke	100 × 84 mm (3.94 × 3.31 in)
Compression ratio	9.1 : 1
Standard compression pressure (at sea level)	1,324 kPa (13.24 kg/cm^2, 188.31 psi) at 850 r/min
Starting system	Electric and recoil starter
Lubrication system:	Wet sump
Oil type or grade:	
Engine oil	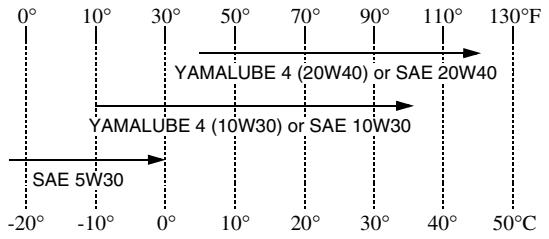 API service SE, SF, SG type or higher
Final gear oil	SAE 80API “GL-4” Hypoid Gear Oil
Differential gear oil	SAE 80API “GL-4” Hypoid Gear Oil
Oil capacity:	
Engine oil	
Periodic oil change	1.9 L (1.7 Imp qt, 2.0 US qt)
With oil filter replacement	2.0 L (1.8 Imp qt, 2.1 US qt)
Total amount	2.2 L (1.9 Imp qt, 2.3 US qt)
Final gear case oil	
Periodic oil change	0.25 L (0.22 Imp qt, 0.26 US qt)
Total amount	0.30 L (0.26 Imp qt, 0.32 US qt)

Downloaded from www.Manualslib.com manuals search engine

Item		Standard
Differential gear case oil		
Periodic oil change		0.28 L (0.25 Imp qt, 0.30 US qt)
Total amount		0.33 L (0.29 Imp qt, 0.35 US qt)
Radiator capacity (including all routes)		1.8 L (1.58 Imp qt, 1.90 US qt)
Air filter:		Wet type element
Fuel:		
Type		Unleaded fuel
Fuel tank capacity		20 L (4.4 Imp gal, 5.3 US gal)
Fuel reserve amount		3.5 L (0.77 Imp gal, 0.92 US gal)
Carburetor:		
Type/quantity		BSR42/1
Manufacturer		MIKUNI
Spark plug:		
Type/manufacturer		DPR8EA–9/NGK
Spark plug gap		0.8 ~ 0.9 mm (0.03 ~ 0.04 in)
Clutch type:		Wet, centrifugal automatic
Transmission:		
Primary reduction system		V-belt
Secondary reduction system		Shaft drive
Secondary reduction ratio		39/24 × 24/18 × 33/9 (7.944)
Transmission type		V-belt automatic
Operation		Left hand operation
Single speed automatic		2.45 ~ 0.70 : 1
Sub transmission ratio	low	37/15 (2.466)
	high	28/19 (1.473)
Reverse gear		25/17 (1.471)
Chassis:		
Frame type		Steel tube frame
Caster angle		5.0°
Camber angle		0°
Kingpin angle		11°
Kingpin offset		0 mm (0 in)
Trail		26 mm (1.02 in)
Tread (STD)	front	900 mm (35.43 in)
	rear	925 mm (36.42 in)
Toe-in		0 ~ 10 mm (0 ~ 0.39 in)
Tire:		
Type		Tubeless
Size	front	AT25 × 8–12
	rear	AT25 × 10–12
Manufacturer	front	DUNLOP
	rear	DUNLOP
Type	front	KT131
	rear	KT135

Downloaded from www.Manualslib.com manuals search engine

Item		Standard
Tire pressure (cold tire):		
Maximum load*		220 kg (485 lb)
Off-road riding	front	32 ~ 38 kPa (0.32 ~ 0.38 kg/cm^2, 4.6 ~ 5.5 psi)
	rear	27 ~ 33 kPa (0.27 ~ 0.33 kg/cm^2, 3.9 ~ 4.8 psi)
*Load in total weight of rider accessories		
Brake:		
Front brake	type	Dual disc brake
	operation	Right hand operation
Rear brake	type	Single disc brake
	operation	Left hand and right foot operation
Suspension:		
Front suspension		Double wishbone
Rear suspension		Double wishbone
Shock absorber:		
Front shock absorber		Coil spring/oil damper
Rear shock absorber		Coil spring/oil damper
Wheel travel:		
Front wheel travel		170 mm (6.69 in)
Rear wheel travel		225 mm (8.86 in)
Electrical:		
Ignition system		DC. C.D.I.
Generator system		A.C. magneto
Battery type		YTX20L-BS
Battery capacity		12 V 18 AH
Headlight type:		Krypton bulb
Bulb wattage × quantity:		
Headlight		12 V 30 W/30 W × 2
Brake/tail light		12 V 21 W/5 W × 1
Indicator lights		
Neutral		LED × 1
Reverse		LED × 1
Coolant temperature		LED × 1
Park position		LED × 1
High gear		LED × 1
Low gear		LED × 1
Diff-lock		LED × 1

Downloaded from www.Manualslib.com manuals search engine

MAINTENANCE SPECIFICATIONS

ENGINE

Item	Standard	Limit
Cylinder head:		
Warp limit 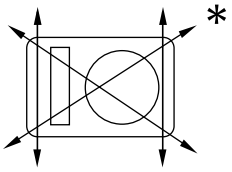	----	0.03 mm (0.0012 in)
Cylinder:		
Bore size	100.005 ~ 100.055 mm (3.9372 ~ 3.9392 in)	100.1 mm (3.94 in)
Measuring point * 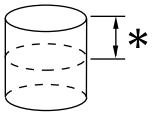	50 mm (1.97 in)	----
Camshaft:		
Drive method	Chain drive (Left)	----
Cam dimensions 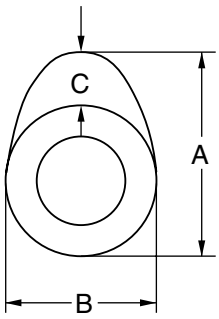		
Intake "A"	35.69 ~ 35.79 mm (1.4051 ~ 1.4091 in)	35.59 mm (1.4012 in)
"B"	30.06 ~ 30.16 mm (1.1835 ~ 1.1874 in)	29.96 mm (1.1795 in)
"C"	5.53 ~ 5.73 mm (0.2177 ~ 0.2256 in)	----
Exhaust "A"	36.5 ~ 36.6 mm (1.4370 ~ 1.4409 in)	36.4 mm (1.4331 in)
"B"	30.11 ~ 30.21 mm (1.1854 ~ 1.1894 in)	30.01 mm (1.1815 in)
"C"	6.29 ~ 6.49 mm (0.2476 ~ 0.2555 in)	----
Camshaft runout limit 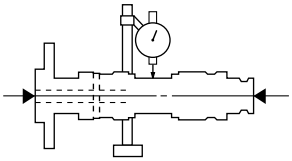	----	0.03 mm (0.0012 in)

Downloaded from www.Manualslib.com manuals search engine

Item		Standard	Limit
Cam chain:			
Cam chain type/No. of links		92RH2010J/126M	----
Cam chain adjustment method		Automatic	----
Rocker arm/rocker arm shaft:			
Bearing inside diameter		12.000 ~ 12.018 mm (0.4724 ~ 0.4731 in)	----
Shaft outside diameter		11.976 ~ 11.991 mm (0.4715 ~ 0.4721 in)	----
Arm-to-shaft clearance		0.009 ~ 0.042 mm (0.0004 ~ 0.0017 in)	----
Valve, valve seat, valve guide:			
Valve clearance (cold)	IN	0.10 ~ 0.15 mm (0.0039 ~ 0.0059 in)	----
	EX	0.15 ~ 0.20 mm (0.0059 ~ 0.0079 in)	----
Valve dimensions			
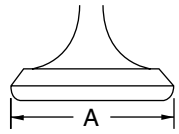 Head Diameter			
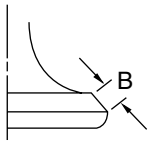 Face Width			
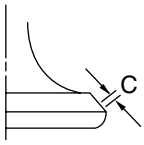 Seat Width			
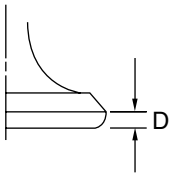 Margin Thickness			
"A" head diameter	IN	29.9 ~ 30.1 mm (1.1772 ~ 1.1850 in)	----
	EX	31.9 ~ 32.1 mm (1.2559 ~ 1.2638 in)	----
"B" face width	IN	2.25 mm (0.0900 in)	----
	EX	2.26 mm (0.0890 in)	----
"C" seat width	IN	0.9 ~ 1.1 mm (0.0354 ~ 0.0433 in)	1.6 mm (0.0630 in)
	EX	0.9 ~ 1.1 mm (0.0354 ~ 0.0433 in)	1.6 mm (0.0630 in)
"D" margin thickness	IN	0.85 ~ 1.15 mm (0.0335 ~ 0.0452 in)	----
	EX	0.85 ~ 1.15 mm (0.0335 ~ 0.0452 in)	----
Stem outside diameter	IN	5.975 ~ 5.990 mm (0.2352 ~ 0.2358 in)	5.945 mm (0.2341 in)
	EX	5.960 ~ 5.975 mm (0.2346 ~ 0.2352 in)	5.930 mm (0.2335 in)
Guide inside diameter	IN	6.000 ~ 6.012 mm (0.2362 ~ 0.2367 in)	6.050 mm (0.2559 in)
	EX	6.000 ~ 6.012 mm (0.2362 ~ 0.2367 in)	6.050 mm (0.2559 in)
Stem-to-guide clearance	IN	0.010 ~ 0.037 mm (0.0004 ~ 0.0015 in)	0.08 mm (0.0031 in)
	EX	0.025 ~ 0.052 mm (0.0010 ~ 0.0020 in)	0.10 mm (0.0039 in)

Downloaded from www.Manualslib.com manuals search engine

Item		Standard	Limit
Stem runout limit		----	0.01 mm (0.0004 in)
Valve seat width	IN	0.9 ~ 1.1 mm (0.0354 ~ 0.0433 in)	----
	EX	0.9 ~ 1.1 mm (0.0354 ~ 0.0433 in)	----
Valve spring:			
Inner spring			
Free length	IN	32.63 mm (1.28 in)	31.0 mm (1.22 in)
	EX	36.46 mm (1.44 in)	34.6 mm (1.36 in)
Set length (valve closed)	IN	27.5 mm (1.08 in)	----
	EX	31.0 mm (1.22 in)	----
Compressed pressure (installed)	IN	100.0 ~ 115.7 N (10.2 ~ 11.8 kg, 22.48 ~ 26.01 lb)	----
	EX	120.6 ~ 138.3 N (12.3 ~ 14.1 kg, 27.11 ~ 31.09 lb)	----
Tilt limit *	IN		2.5°/1.4 mm (2.5°/0.06 in)
	EX		2.5°/1.6 mm (2.5°/0.06 in)
Direction of winding (top view)	IN	Clockwise	----
	EX	Clockwise	----

Downloaded from www.Manualslib.com manuals search engine

Item	Standard	Limit
Piston:		
Piston to cylinder clearance	0.05 ~ 0.07 mm (0.0020 ~ 0.0028 in)	0.15 mm (0.0059 in)
Piston size “D”	99.945 ~ 99.995 mm (3.9348 ~ 3.9368 in)	----
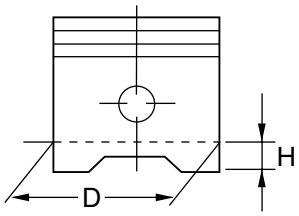		
Measuring point “H”	2.5 mm (0.10 in)	----
Piston off-set	1.0 mm (0.0394 in)	----
Offset direction	Intake side	----
Piston pin bore inside diameter	22.004 ~ 22.015 mm (0.8663 ~ 0.8667 in)	22.045 mm (0.8679 in)
Piston pin outside diameter	21.991 ~ 22.000 mm (0.8658 ~ 0.8661 in)	21.971 mm (0.8650 in)
Piston rings:		
Top ring		
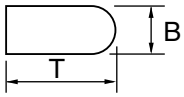		
Type	Barrel	----
Dimensions (B × T)	1.2 × 3.8 mm (0.0472 × 0.1496 in)	----
End gap (installed)	0.30 ~ 0.45 mm (0.0118 ~ 0.0177 in)	0.70 mm (0.0276 in)
Side clearance (installed)	0.04 ~ 0.08 mm (0.0016 ~ 0.0031 in)	0.13 mm (0.0051 in)

Downloaded from www.Manualslib.com manuals search engine

Item	Standard	Limit
2nd ring 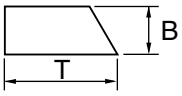		
Type	Taper	----
Dimensions (B × T)	1.2 × 4.0 mm (0.0472 × 0.1575 in)	----
End gap (installed)	0.30 ~ 0.45 mm (0.0118 ~ 0.0177 in)	0.80 mm (0.0315 in)
Side clearance	0.03 ~ 0.07 mm (0.0012 ~ 0.0028 in)	0.13 mm (0.0051 in)
Oil ring 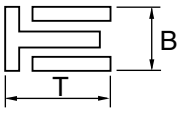		
Dimensions (B × T)	2.5 × 3.4 mm (0.0984 × 0.1339 in)	----
End gap (installed)	0.2 ~ 0.7 mm (0.0079 ~ 0.0276 in)	----
Side clearance	0.06 ~ 0.15 mm (0.0024 ~ 0.0059 in)	----
Crankshaft: 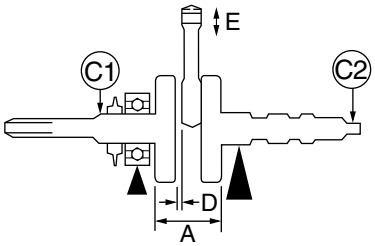		
Crank width “A”	74.95 ~ 75.00 mm (2.9508 ~ 2.9528 in)	----
Runout limit C1	----	0.03 mm (0.0012 in)
C2	----	0.03 mm (0.0012 in)
Big end side clearance “D”	0.35 ~ 0.65 mm (0.0138 ~ 0.0256 in)	1.0 mm (0.0394 in)
Big end radial clearance “E”	0.010 ~ 0.025 mm (0.0004 ~ 0.0010 in)	----
Balancer:		
Balancer drive method	Gear	----
Automatic centrifugal clutch:		
Clutch shoe thickness	1.5 mm (0.06 in)	1.0 mm (0.04 in)
Clutch-in revolution	1,900 ~ 2,300 r/min	----
Clutch-stall revolution	3,350 ~ 3,850 r/min	----

Downloaded from www.Manualslib.com manuals search engine

Item		Standard	Limit
Transmission:			
Main axle deflection limit		----	0.06 mm (0.0024 in)
Drive axle deflection limit		----	0.06 mm (0.0024 in)
Shifter:			
Shifter type		Shift cam and guide bar	----
Air filter oil grade:		Engine oil	----
Carburetor:			
I. D. mark		5KM1 00	----
Main jet	(M.J)	#153.8	----
Main air jet	(M.A.J)	#70	----
Jet needle	(J.N)	6JP9-53-2	----
Needle jet	(N.J)	O-0M	----
Pilot air jet	(P.A.J.1)	#60	----
Pilot air jet	(P.A.J.2)	1.5	----
Pilot outlet	(P.O)	1.1	----
Pilot jet	(P.J)	#40	----
Bypass 1	(B.P.1)	0.8	----
Bypass 2	(B.P.2)	0.8	----
Bypass 3	(B.P.3)	0.8	----
Valve seat size	(V.S)	3.0	----
Starter jet	(G.S.1)	#55	----
Starter jet	(G.S.2)	0.8	----
Throttle valve size	(Th.V)	#105	----
Float height	(F.H)	13 mm (0.51 in)	----
Fuel level	(F.L)	4.5 mm (0.18 in)	----
Engine idle speed		1,450 ~ 1,550 r/min	----
Intake vacuum		30.7 ~ 33.3 kPa (230 ~ 250 mmHg, 9.07 ~ 9.83 inHg)	----
Oil pump:			
Oil filter type		Foam	----
Oil pump type		Trochoid	----
Tip clearance “A” or “B”		0.03 ~ 0.10 mm (0.0012 ~ 0.0039 in)	0.15 mm (0.006 in)
Side clearance		0.03 ~ 0.10 mm (0.0012 ~ 0.0039 in)	0.12 mm (0.005 in)
Bypass valve setting pressure		490.3 ~ 588.4 kPa (4.90 ~ 5.88 kg/cm^2, 71.1 ~ 85.3 psi)	----
Oil pressure (hot)		65 kPa (0.65 kg/cm^2, 9.4 psi) at 1,500 r/min	----
Pressure check location		Cylinder head	----
Cooling system:			
Radiator core			
Width		360 mm (14.17 in)	----
Height		219 mm (8.62 in)	----
Thickness		27 mm (1.06 in)	----

Downloaded from www.Manualslib.com manuals search engine

Item	Standard	Limit
Radiator cap opening pressure	93.3 ~ 122.7 kPa (0.933 ~ 1.227 kg/cm^2, 13.53 ~ 17.79 psi)	----
Radiator capacity	0.78 L (0.69 Imp qt, 0.82 US qt)	----
Coolant reservoir		
Capacity	0.3 L (0.26 Imp qt, 0.32 US qt)	----
From low to full level	0.165 L (0.15 Imp qt, 0.17 US qt)	----
Water pump:		
Type	Single suction centrifugal pump	----
Reduction ratio	32/31 (1.032)	
Thermostat:		
Valve opening temperature	50 ~ 54 °C (122.0 ~ 129.2 °F)	----
Valve full open temperature	70 °C (158 °F)	----
Valve lift-full open	8 mm (0.31 in)	----
Shaft drive:		
Middle gear backlash	0.1 ~ 0.3 mm (0.004 ~ 0.012 in)	----
Final gear backlash	0.1 ~ 0.2 mm (0.004 ~ 0.008 in)	----
Differential gear backlash	0.05 ~ 0.25 mm (0.002 ~ 0.010 in)	----

Lubrication chart:

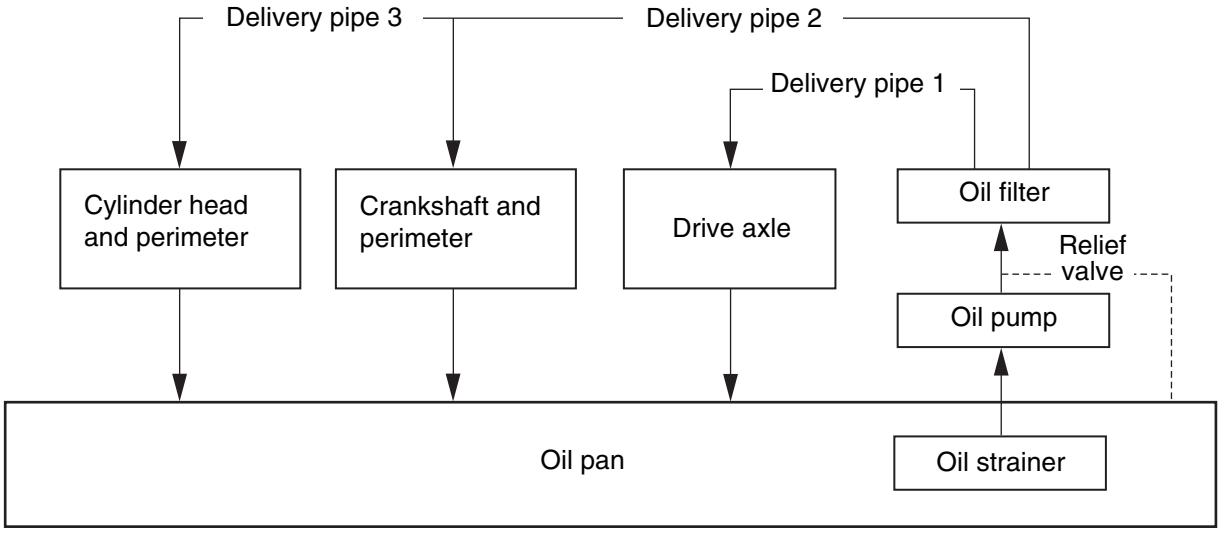

Downloaded from www.Manualslib.com manuals search engine

Item	Standard
Cylinder head tightening sequence: 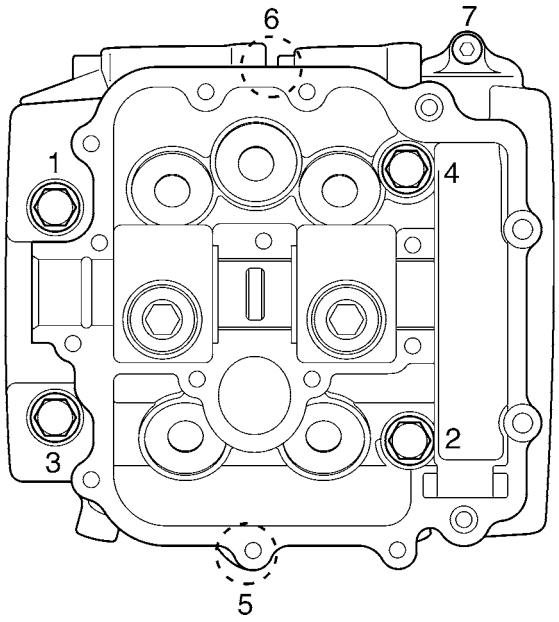	

Downloaded from www.Manualslib.com manuals search engine

Tightening torques

Part to be tightened	Part name	Thread size	Q'ty	Tightening torque			Remarks
				Nm	m·kg	ft·lb	
Cylinder head (exhaust pipe)	Stad bolt	M8	4	15	1.5	11	
Cylinder head	Bolt	M9	4	38	3.8	27	
	Bolt	M9	2	38	3.8	27	
	Bolt	M6	1	10	1.0	7.2	
Spark plug	—	M12	1	18	1.8	13	
Cylinder head cover	Bolt	M6	17	10	10	7.2	
Camshaft end cap	Bolt	M6	1	10	1.0	7.2	
Oil check bolt	Union bolt	M6	1	7	0.7	5.1	
Tappet cover (exhaust)	—	M32	2	12	1.2	8.7	
Tappet cover (intake)	Bolt	M6	4	10	1.0	7.2	
Cylinder	Bolt	M10	2	42	4.2	30	
	Bolt	M10	2	42	4.2	30	
	Bolt	M6	2	10	1.0	7.2	
Timing chain tensioner	Bolt	M6	2	10	1.0	7.2	
Timing chain tensioner cap	Bolt	M6	1	7	0.7	5.1	
Timing chain guide (intake)	Bolt	M6	2	8	0.8	5.8	G
Camshaft sprocket	Bolt	M7	2	20	2.0	14	
Rocker arm shaft	Bolt	M6	2	10	1.0	7.2	
Valve adjusting screw	Nut	M6	5	14	1.4	10	
Radiator	Bolt	M6	2	7	0.7	5.1	
Coolant drain bolt	Bolt	M6	1	10	1.0	7.2	
Engine oil drain bolt	Bolt	M14	1	30	3.0	22	
Oil delively pipe 1	Union bolt	M8	2	18	1.8	13	
Oil delively pipe 2	Union bolt	M14	2	35	3.5	25	
Oil delively pipe 3	Union bolt	M10	1	20	2.0	14	
	Bolt	M6	1	10	1.0	7.2	
Oil filter cartridge	—	M20	1	17	1.7	12	
Oil filter bolt	Union bolt	M20	1	63	6.3	46	E
Oil pump assembly	Bolt	M6	3	10	1.0	7.2	
Oil strainer	Bolt	M6	1	10	1.0	7.2	
Relief valve	Bolt	M6	2	10	1.0	7.2	
Carburetor joint	Bolt	M6	4	10	1.0	7.2	
Maffler and exhaust pipe	Bolt	M8	1	20	2.0	14	
Exhaust pipe protector	Bolt	M6	6	11	1.1	8	
Exhaust pipe	Nut	M8	4	14	1.4	10	
Maffler	Bolt	M8	1	20	2.0	14	
Exhaust pipe stay	Bolt	M6	2	14	1.4	10	
Recoil starter assembly	Bolt	M6	4	14	1.4	10	G
Starter pulley	Bolt	M10	1	55	5.5	40	
Crankcase cover	Bolt	M6	13	10	1.0	7.2	
Oil seal retainer	Screw	M5	3	7	0.7	5.1	
Drive belt cover	Bolt	M6	14	10	1.0	7.2	
Bearing housing	Bolt	M6	4	10	1.0	7.2	

Downloaded from www.Manualslib.com manuals search engine

Part to be tightened	Part name	Thread size	Q'ty	Tightening torque			Remarks
				Nm	m·kg	ft·lb	
Primary sheave assembly	Nut	M16	1	120	12.0	85	
Secondary sheave assembly	Nut	M16	1	100	10.0	72	
Secondary sheave spring retainer	Nut	M36	1	90	9.0	65	
Clutch carrier assembly	Nut	M22	1	160	16.0	115	
Balancer driven gear	Nut	M18	1	110	11.0	80	
Middle driven shaft bearing retainer	Screw	M8	4	29	2.9	21	
Middle driven shaft drive pinion gear	Nut	M22	1	145	14.5	105	
Middle drive shaft bearing housing	Bolt	M8	4	32	3.2	23	
Middle driven gear bearing retainer	Nut	M60	1	110	11.0	80	
Coupling (middle driven gear)	Nut	M14	1	97	9.7	70	
Yoke (middle driven gear)	Nut	M14	1	97	9.7	70	
Middle driven gear bearing housing	Bolt	M8	4	25	2.5	18	
Middle driven shaft bearing retainer	Nut	M55	1	80	8.0	58	Left-hand-threads
Sift arm	Bolt	M6	1	14	1.4	10	
Shift rod	Nut	M8	2	15	1.5	11	
Shift lever	Bolt	M6	1	14	1.4	10	
Shift control cable	—	M12	1	6	0.6	4.3	
Select lever unit	Bolt	M8	3	15	1.5	11	
Gear position switch	Bolt	M6	2	7	0.7	5.1	
Reverse switch	—	M10	1	20	2.0	14	
Stator assembly	Screw	M6	3	7	0.7	5.1	
Pickup coil	Bolt	M5	2	7	0.7	5.1	
Ignition coil	Bolt	M6	2	7	0.7	5.1	
Thermo switch (cylinder head)	—	M1/8	1	8	0.8	5.8	
Speed sensor	Bolt	M6	1	10	1.0	7.2	LS
Thermo switch (radiator)	—	M18	1	28	2.8	20	

Downloaded from www.Manualslib.com manuals search engine

CHASSIS

Item		Standard	Limit
Steering system:			
Steering bearing type		Ball and race bearing	----
Front suspension:			
Shock absorber travel		86 mm (3.39 in)	----
Fork spring free length		295 mm (11.61 in)	----
Spring fitting length		235.5 mm (9.27 in)	----
Spring rate	(K1)	20 N/mm (2.04 kg/mm, 114.2 lb/in)	----
Stroke	(K1)	0 ~ 86 mm (0 ~ 3.39 in)	----
Optional spring		No	----
Rear suspension:			
Shock absorber travel		95 mm (3.74 in)	----
Spring free length		277 mm (10.91 in)	----
Spring fitting length		235.5 mm (9.27 in)	----
Spring rate	(K1)	36.4 N/mm (3.71 kg/mm, 207.84 lb/in)	----
Stroke	(K1)	0 ~ 95 mm (0 ~ 3.74 in)	----
Optional spring		No	----
Front wheel:			
Type		Panel wheel	----
Rim size		12 × 6.0 AT	----
Rim material		Aluminum	----
Rim runout limit	radial	----	2 mm (0.08 in)
	lateral	----	2 mm (0.08 in)
Rear wheel:			
Type		Panel wheel	----
Rim size		12 × 7.5 AT	----
Rim material		Aluminum	----
Rim runout limit	radial	----	2 mm (0.08 in)
	lateral	----	2 mm (0.08 in)

Downloaded from www.Manualslib.com manuals search engine

Item		Standard	Limit
Front disc brake:			
Type		Dual	----
Disc outside diameter × thickness		220.0 × 3.5 mm (8.66 × 0.14 in)	----
Pad thickness	inner	4.2 mm (0.17 in)	1 mm (0.04 in)
Pad thickness	outer	4.2 mm (0.17 in)	1 mm (0.04 in)
Master cylinder inside diameter		14 mm (0.55 in)	----
Caliper cylinder inside diameter		32 mm (1.26 in)	----
Brake fluid type		DOT 4	----
Rear disc brake:			
Type		Single	----
Disc outside diameter × thickness		150.0 × 8.5 mm (5.91 × 0.33 in)	----
Pad thickness	inner	7.0 mm (0.28 in)	1 mm (0.04 in)
Pad thickness	outer	7.0 mm (0.28 in)	1 mm (0.04 in)
Master cylinder inside diameter		14 mm (0.55 in)	----
Caliper cylinder inside diameter		22.65 mm (0.89 in)	----
Brake fluid type		DOT 4	----
Brake lever and brake pedal:			
Brake lever free play (left)		0.5 ~ 2 mm (0.02 ~ 0.08 in)	----
Brake pedal position		45 mm (1.77 in)	----
Throttle lever free play		3 ~ 5 mm (0.12 ~ 0.20 in)	----

Downloaded from www.Manualslib.com manuals search engine

Tightening torques

Part to be tightened	Thread size	Tightening torque			Remarks
		Nm	m·kg	ft·lb	
Engine bracket and engine	M8	33	3.3	24	
Engine bracket and rubber damper (front)	M8	33	3.3	24	
Engine bracket and rubber damper (front)	M6	10	1.0	7.2	
Engine and rubber damper (rear)	M10	56	5.6	40	
Engine and rubber damper (rear)	M6	10	1.0	7.2	
Rubber damper and frame	M10	42	4.2	30	
Front wheel and front wheel hub	M10	55	5.5	40	
Front wheel hub and constant velocity joint	M16	200	20.0	145	
Front brake disc and front wheel hub	M8	30	3.0	22	
Front brake caliper and front wheel hub	M8	30	3.0	22	
Rear wheel and rear wheel hub	M10	55	5.5	40	
Rear wheel hub and constant velocity joint	M16	200	20.0	145	
Rear brake disc and brake disc hub	M6	10	1.0	7.2	
Front brake pad holding bolt	M10	18	1.8	13	
Rear brake pad holding bolt	M10	18	1.8	13	
Front brake master cylinder and handlebar	M6	7	0.7	5.1	
Front brake hose union bolt	M10	27	2.7	19	
Rear brake master cylinder and master cylinder bracket	M6	23	2.3	17	
Rear brake hose union bolt	M10	30	3.0	22	
Front brake caliper retaining bolt	M8	23	2.3	17	
Front brake caliper bleed screw	M8	6	0.6	4.3	
Rear brake caliper and drive pinion gear bearing housing	M10	40	4.0	29	
Rear brake caliper bleed screw	M8	6	0.6	4.3	
Handlebar holder	M8	20	2.0	14	
Steering stem bearing retainer	M42	40	4.0	29	
Steering stem and pitman arm	M14	180	18.0	130	
Steering stem and frame	M8	23	2.3	17	
Pitman arm and tie-rod	M10	25	2.5	18	
Steering knuckle and tie-rod	M10	25	2.5	18	
Steering knuckle and front arm (upper)	M10	25	2.5	18	
Steering knuckle and front arm (lower)	M10	48	4.8	35	
Steering knuckle and brake disc guard	M6	7	0.7	5.1	
Steering knuckle and brake hose holder	M6	10	1.0	7.2	
Front shock absorber and frame	M10	45	4.5	32	
Front shock absorber and front arm (upper)	M10	45	4.5	32	
Front arm (upper) and frame	M10	45	4.5	32	
Front arm (lower) and frame	M10	45	4.5	32	
Stabilizer and frame	M8	30	3.0	22	
Stabilizer joint and stabilizer	M10	48	4.8	35	
Stabilizer joint and rear frame	M10	48	4.8	35	

Downloaded from www.Manualslib.com manuals search engine

Part to be tightened	Thread size	Tightening torque			Remarks
		Nm	m·kg	ft·lb	
Rear knuckle and rear frame (upper)	M10	45	4.5	32	
Rear knuckle and rear frame (lower)	M10	45	4.5	32	
Rear shock absorber and frame	M10	45	4.5	32	
Rear shock absorber and rear arm (lower)	M10	45	4.5	32	
Rear arm (upper) and frame	M10	45	4.5	32	
Rear arm (lower) and frame	M10	45	4.5	32	
Differential gear case and frame	M10	55	5.5	40	
Differential gear case filler bolt	M14	23	2.3	16	
Differential gear case drain bolt‘	M10	10	1.0	7.2	
Differential gear case cover and differential gear case	M8	25	2.5	18	
Gear motor and differential gear case cover	M8	13	1.3	9.4	
Universal joint yoke and drive pinion gear	M14	62	6.2	45	
Final drive gear case and frame	M10	55	5.5	40	
Final drive gear case filler plug	M20	23	2.3	16	
Final drive gear case drain bolt	M14	23	2.3	16	
Final drive gear oil check bolt	M8	10	1.0	7.2	
Ring gear bearing housing and final drive gear case	M10	40	4.0	29	
Ring gear bearing housing and final drive gear case	M8	23	2.3	16	
Drive pinion gear bearing housing and final drive case	M8	23	2.3	16	
Coupling gear and final drive pinion gear	M12	70	7.0	50	

Downloaded from www.Manualslib.com manuals search engine

ELECTRICAL

Item	Standard	Limit
Voltage:	12 V	----
Ignition system:		
Ignition timing (B.T.D.C.)	12°/ 1,500 r/min	----
Advancer type	Digital type	----
C.D.I.:		
Magneto model/manufacturer	F4T46471/MITSUBISHI	----
Pickup coil resistance/color	459 ~ 561 Ω at 20 °C (68 °F)/ White/Red – White/Green	----
Rotor ratation direction sensing coil resistance/color	0.104 ~ 0.127 Ω at 20 °C (68 °F)/ Red – White/Blue	----
C.D.I. unit model/manufacturer	F8T36472/MITSUBISHI	----
Ignition coil:		
Model/manufacturer	2JN/YAMAHA	----
Minimum spark gap	6 mm (0.24 in)	----
Primary winding resistance	0.18 ~ 0.28 Ω at 20 °C (68 °F)	----
Secondary winding resistance	6.32 ~ 9.48 kΩ at 20 °C (68 °F)	----
Spark plug cap:		
Type	Resin type	----
Resistance	10 kΩ	----
Charging system:		
Type	A.C. magneto generator	----
Model/manufacturer	F4T496/MITSUBISHI	----
Nominal output	14 V 21 A at 5,000 r/min	----
Charging coil resistance/color	0.32 ~ 0.43 Ω at 20 °C (68 °F)/ White – White	----
Rectifier/regulator:		
Regulator type	Semi conductor-shortcircuit	----
Model/manufacturer	SH650D-11/SHINDENGEN	----
No load regulated voltage (DC)	14.1 ~ 14.9 V	----
Capacity	18 A	----
Withstand voltage	200 V	----
Electric starter system:		
Type	Constantmesh type	----
Starter motor		
Model/manufacturer	SM-13/MITSUBA	----
I.D. number	SM-13	----
Output	0.8 kW	----
Armature coil resistance	0.025 ~ 0.035 Ω at 20 °C (68 °F)	----
Brush overall length	12.5 mm (0.49 in)	5 mm (0.20 in)
Spring force	7.65 ~ 10.01 N (27.54 ~ 36.03 oz)	----
Commutator diameter	28 mm (1.10 in)	27 mm (1.06 in)
Mica undercut	0.7 mm (0.03 in)	----

Downloaded from www.Manualslib.com manuals search engine

Item	Standard	Limit
Starter relay		
Model/manufacturer	MS5F-561/JIDECO	----
Amperage rating	180 A	----
Coil winding resistance	4.18 ~ 4.62 Ω at 20 °C (68 °F)	----
Electric fan:		
Running rpm	2,880 r/min	----
Thermostat switch:		
Thermostat switch 1		
Model/manufacturer	5KM/DENSO	----
Thermostat switch 2		
Model/manufacturer	5GM/NIPPON THERMOSTAT	----
Circuit breaker:		
Type	Fuse	----
Amperage for individual circuit		
Main fuse	30 A × 1	----
Headlight fuse	15 A × 1	----
Ignition fuse	10 A × 1	----
Auxiliary DC jack fuse	10 A × 1	----
Four-wheel drive fuse	3 A × 1	----
Signaling system fuse	10 A × 1	----
Backup fuse (odometer)	10 A × 1	----
Reserve	30 A × 1	----
Reserve	15 A × 1	----
Reserve	10 A × 1	----
Reserve	3 A × 1	----

Downloaded from www.Manualslib.com manuals search engine

EB201000

HOW TO USE THE CONVERSION TABLE

All specification data in this manual are listed in SI and METRIC UNITS.
Use this table to convert METRIC unit data to IMPERIAL unit data.

Ex.

METRIC		MULTIPLIER		IMPERIAL
** mm	×	0.03937	=	** in
2 mm	×	0.03937	=	0.08 in

CONVERSION TABLE

METRIC TO IMPERIAL			
	Metric unit	Multiplier	Imperial unit
Torque	m·kg m·kg cm·kg cm·kg	7.233 86.794 0.0723 0.8679	ft·lb in·lb ft·lb in·lb
Weight	kg g	2.205 0.03527	lb oz
Speed	km/hr	0.6214	mph
Distance	km m m cm mm	0.6214 3.281 1.094 0.3937 0.03937	mi ft yd in in
Volume/ Capacity	cc (cm^3) cc (cm^3) lt (liter) lt (liter)	0.03527 0.06102 0.8799 0.2199	oz (IMP liq.) cu·in qt (IMP liq.) gal (IMP liq.)
Misc.	kg/mm kg/cm^2 Centigrade (°C)	55.997 14.2234 9/5+32	lb/in psi (lb/in^2) Fahrenheit (°F)

EB202001

GENERAL TORQUE SPECIFICATIONS

This chart specifies torque for standard fasteners with standard I.S.O. pitch threads. Torque specifications for special components or assemblies are provided for each chapter of this manual. To avoid warpage, tighten multi-fastener assemblies in a crisscross fashion, in progressive stages, until the specified torque is reached. Unless otherwise specified, torque specifications require clean, dry threads. Components should be at room temperature.

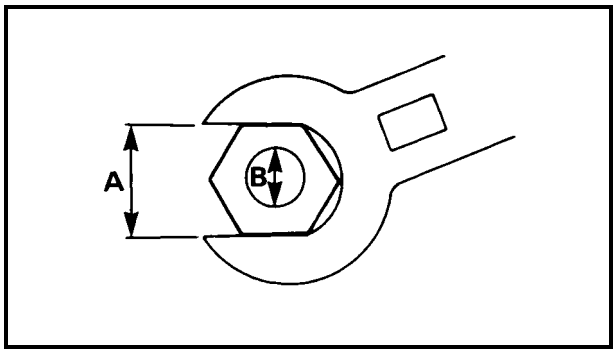

A: Distance between flats
B: Outside thread diameter

A (nut)	B (bolt)	General torque specifications		
		Nm	m•kg	ft•lb
10 mm	6 mm	6	0.6	4.3
12 mm	8 mm	15	1.5	11
14 mm	10 mm	30	3.0	22
17 mm	12 mm	55	5.5	40
19 mm	14 mm	85	8.5	61
22 mm	16 mm	130	13.0	94

Downloaded from www.Manualslib.com manuals search engine

LUBRICATION POINTS AND LUBRICANT TYPES

ENGINE

Lubrication points	Lubricant type
Oil seal lips (all)	LS
O-ring (all)	LS
Bearings (all)	E
Crank pin	E
Connecting rod (bearing)	E
Camshaft sprocket/timing chain	M
Crankshaft	E
Piston surface/piston rings	E
Piston pin	E
Baffer boss	E
Valve stem/valve stem end	M
Rocker arm shaft	E
Rocker arm	M
Camshaft lobe/journal	M
Cylinder head bolt	E
Oil pump shaft, rotor, housing	M
Oil filter O-ring	LS
Starter idle gear shaft	M
Transmission gear (wheel/pinion)	M
Axle (main/drive)	M
Shift fork/guide bar	E
Shift cam/shift shaft/shift cam stopper ball	E
Shift lever (select lever)/shift guide	LS
Shift cam lever	M
Stopper lever	E
Clutch carrier assembly	E
One-way bearing	M
Drive chain/sprocket	E
Crankcase mating surfaces	Sealant (Quick Gasket®) Yamaha Bond No.1215
Stater lead grommet (left side crankcase)	Sealant (Quick Gasket®) Yamaha Bond No.1215

Downloaded from www.Manualslib.com manuals search engine

COOLANT FLOW DIAGRAMS

① Radiator
② Radiator cap
③ Thermo switch
④ Radiator inlet hose
⑤ Thermostat assembly breather hose
⑥ Water pump outlet pipe
⑦ Water pump outlet hose
⑧ Radiator outlet hose

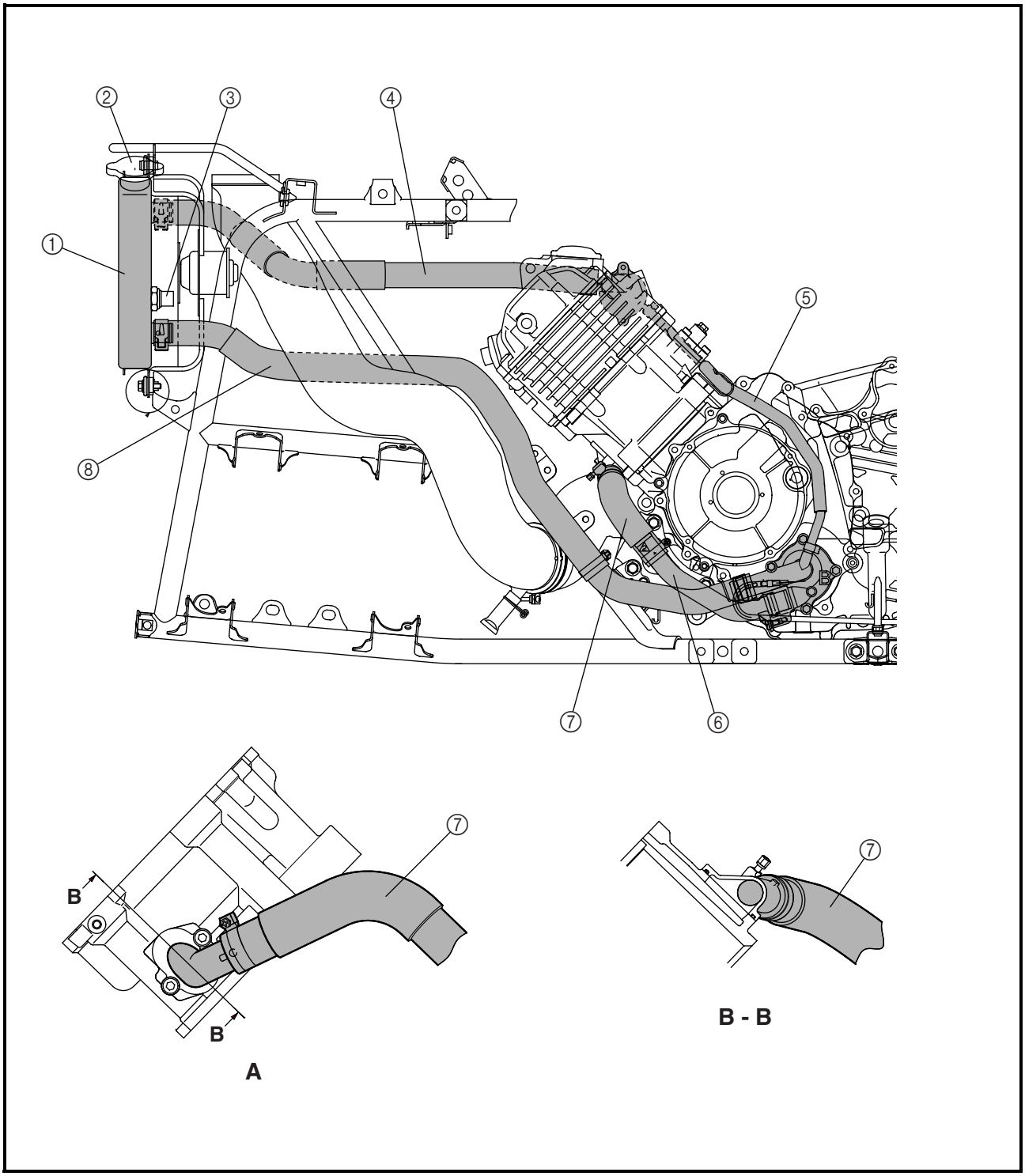

Downloaded from www.Manualslib.com manuals search engine

① Thermostat
② Radiator inlet hose
③ Radiator
④ Radiator outlet hose

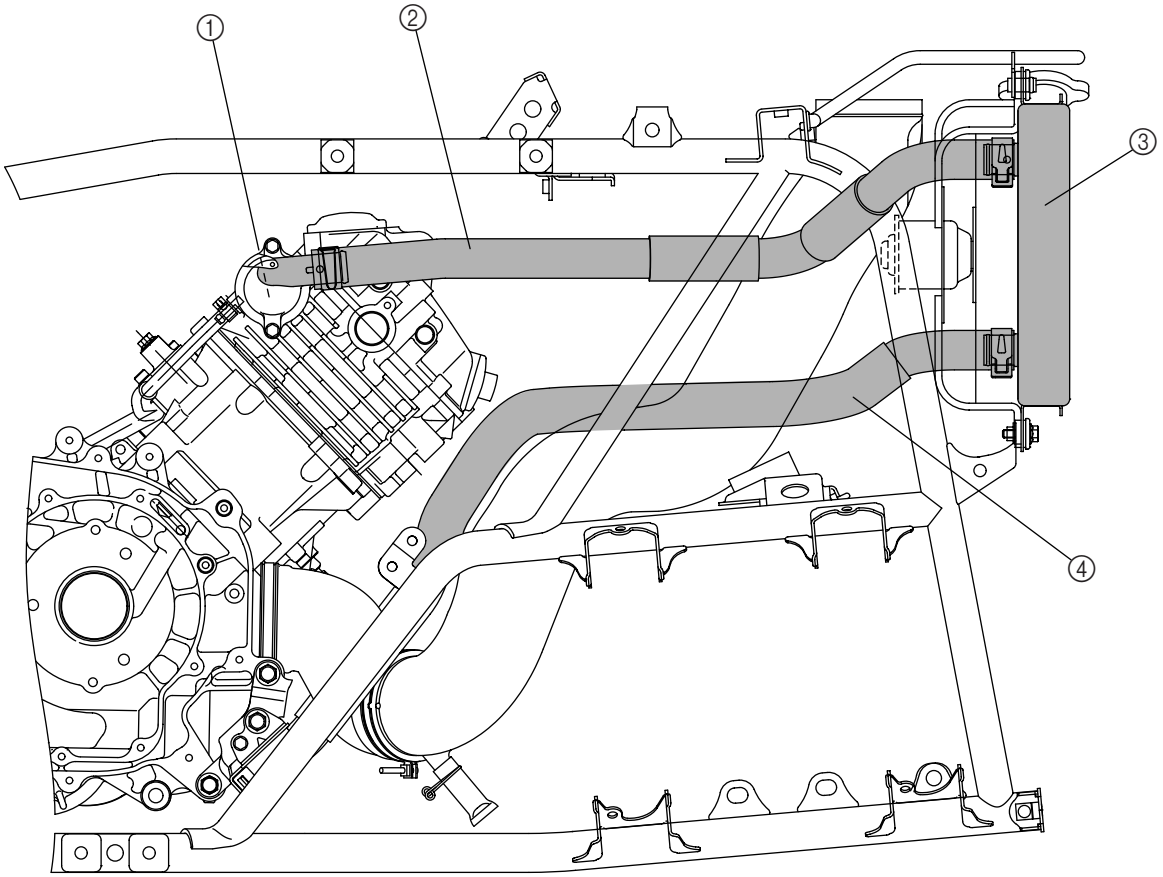

Downloaded from www.Manualslib.com manuals search engine

OIL FLOW DIAGRAMS

① Camshaft
② Oil delively pipe 2
③ Oil delively piep 3
④ Crankshaft

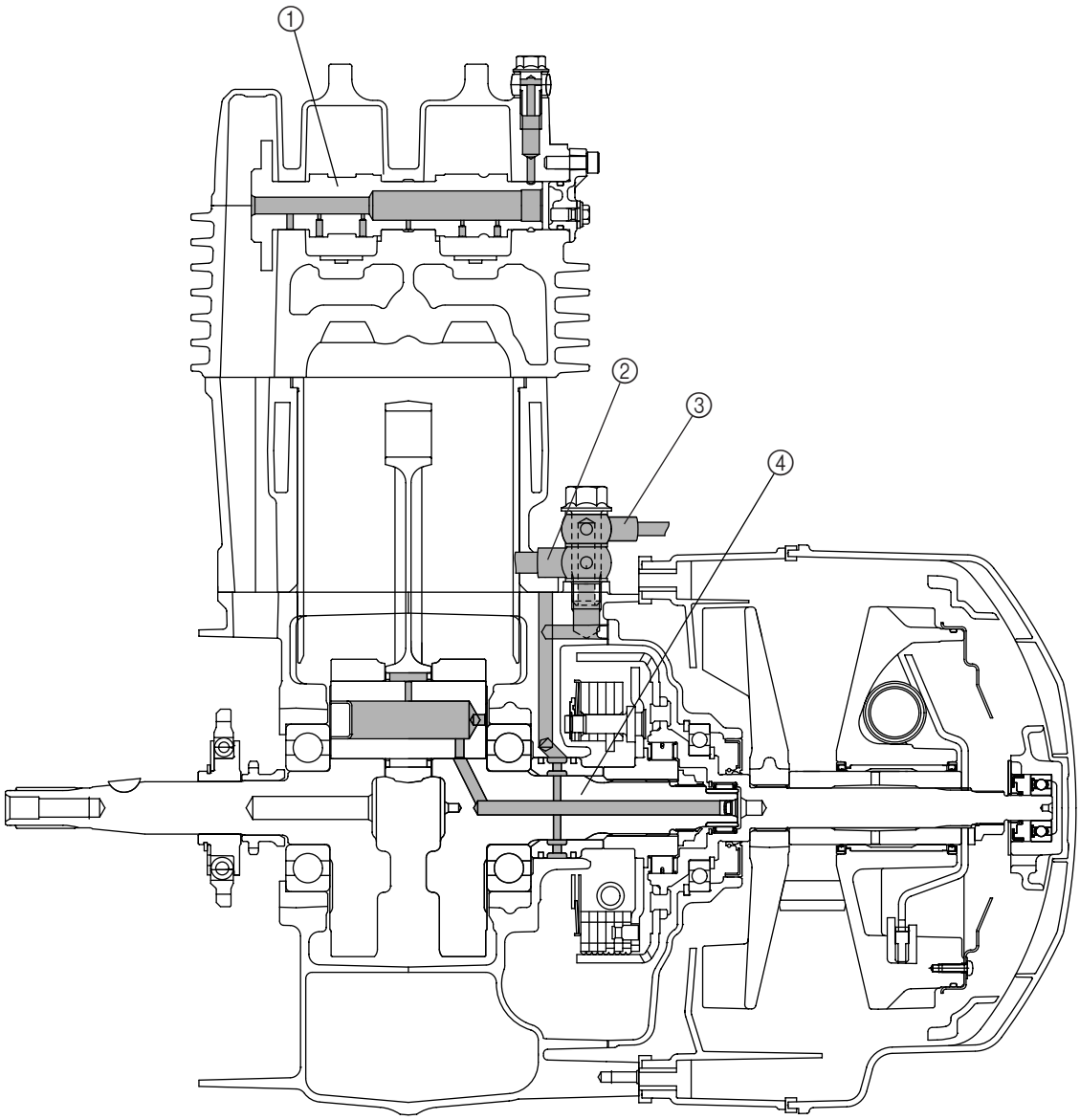

Downloaded from www.Manualslib.com manuals search engine

① Oil delively pipe 1
② Oil delively pipe 2
③ Oil delively pipe 3
④ Oil pump
⑤ Oil strainer

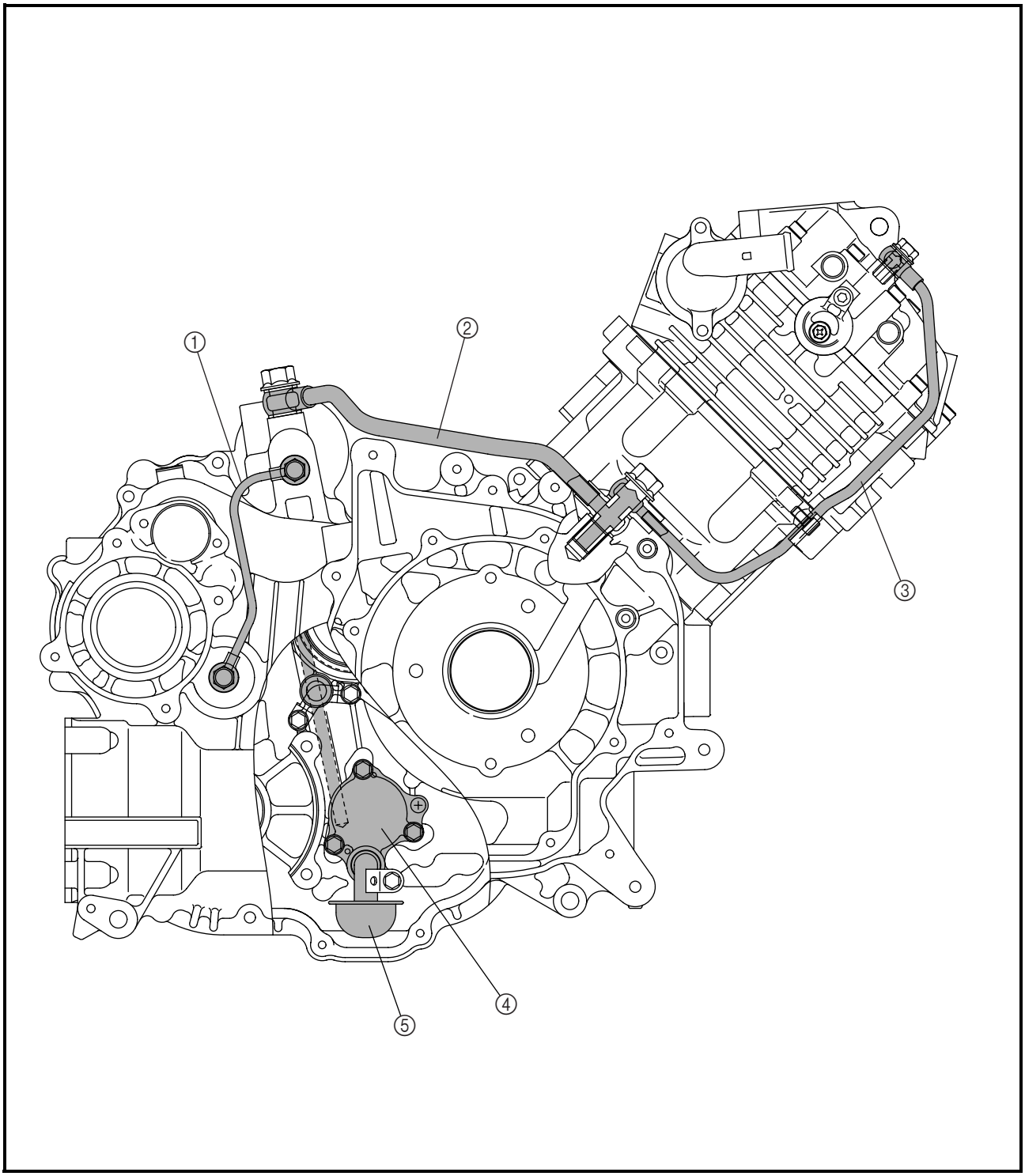

Downloaded from www.Manualslib.com manuals search engine

① Oil filter
② Oil delively pipe 2
③ Oil delively pipe 1
④ Drive axle
⑤ Relief valve
⑥ Oil pump
⑦ Oil strainer

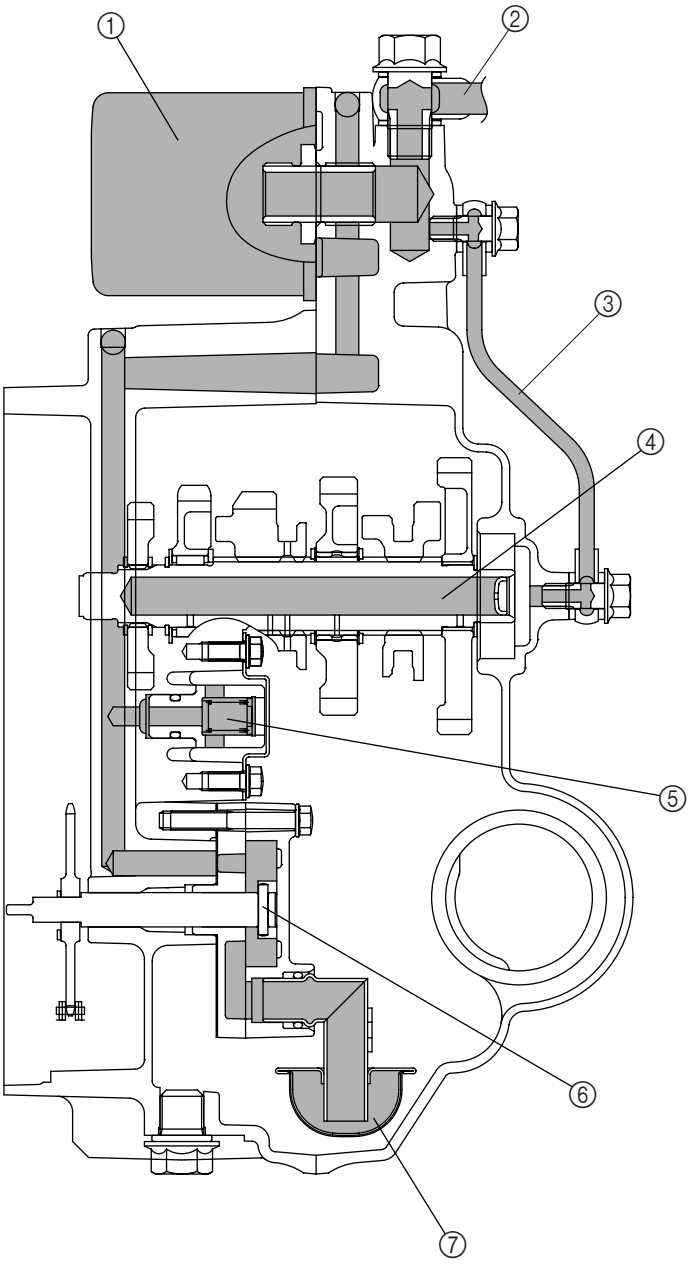

Downloaded from www.Manualslib.com manuals search engine

CABLE ROUTING

① Rear brake light switch
② Rear brake cable
③ Starter cable
④ Front brake hose
⑤ Throttle cable
⑥ On-command four-wheel drive switch and differential gear lock switch lead
⑦ Front brake light switch lead
⑧ Handlebar switch lead
⑨ Rear brake light switch lead
⑩ Fan motor lead
⑪ Sub-wire harness (to gear motor)
⑫ Differential gear case breather hose

A Pass the cable, hose, and leads between the meter assembly and plastic cover.

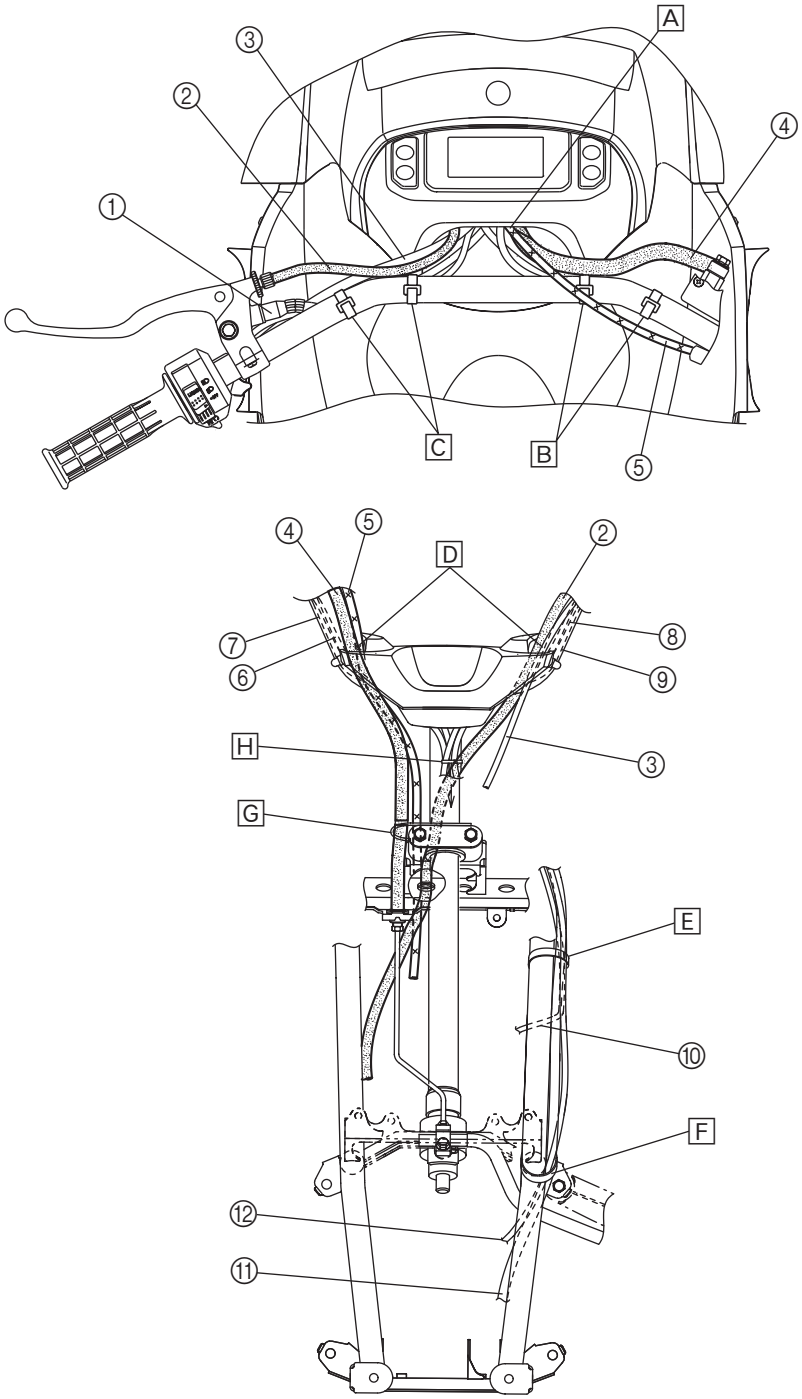

Downloaded from www.Manualslib.com manuals search engine

[B] Fasten the front brake light switch lead, and the on-command four-wheel drive switch and differential gear lock switch lead behind the handlebar with a plastic band.
[C] Fasten the handlebar switch lead and rear brake switch lead behind the handlebar with a plastic band.
[D] Pass the cable, hose, and leads through the slit of the handlebar cover.
[E] Fasten the thermo switch 2 lead, fan motor lead, coolant reservoir breather hose, coolant reservoir hose, gear motor lead and differential gear case breather hose with a plastic band. Install the plastic band facing inward.
[F] Fasten the gear motor lead and differential gear case breather hose with a plastic band. Be sure not to pinch the hose. Install the plastic band facing inward.

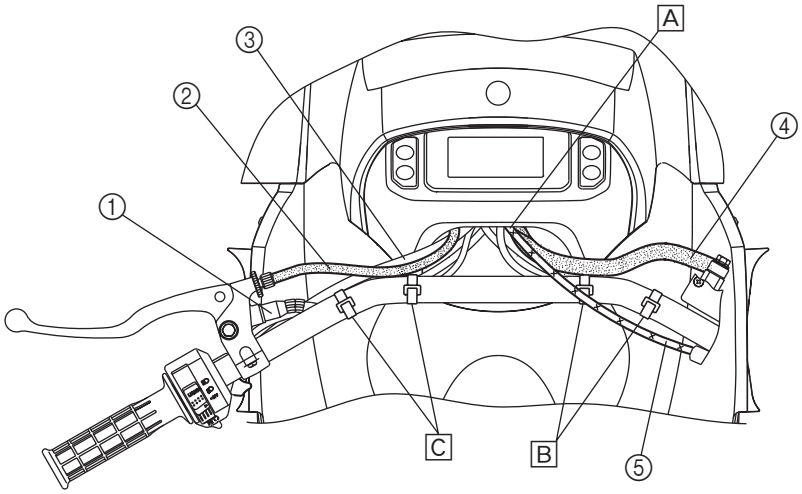

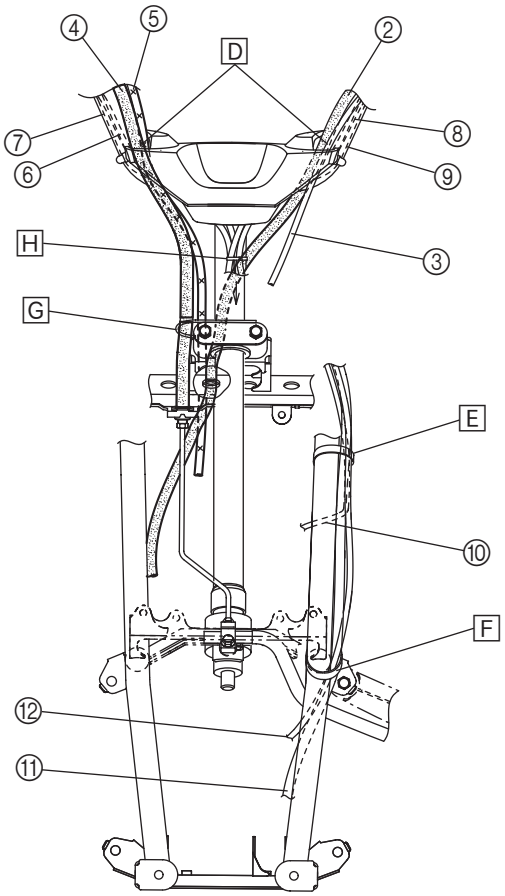

Downloaded from www.Manualslib.com manuals search engine

G Pass the brake hose through the hose guide.
H Fasten the on-command four-wheel drive switch and differential gear lock switch lead, front brake light switch lead, handlebar switch lead, and rear brake light switch lead on the front side on the steering stem with a plastic locking tie.

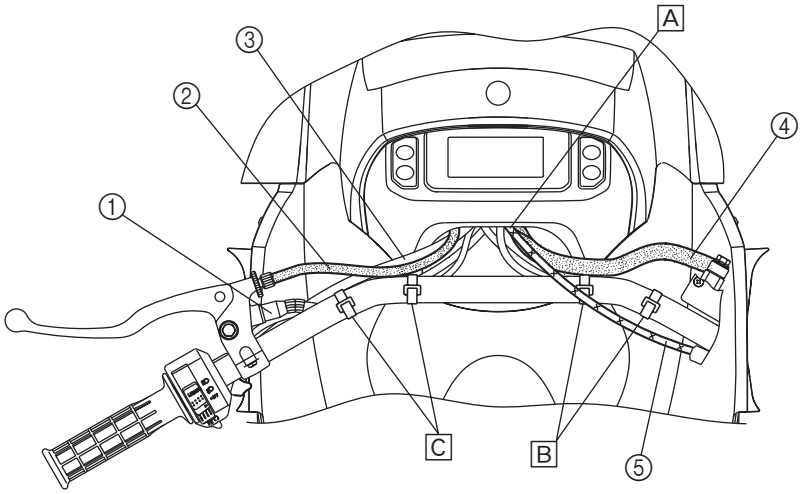

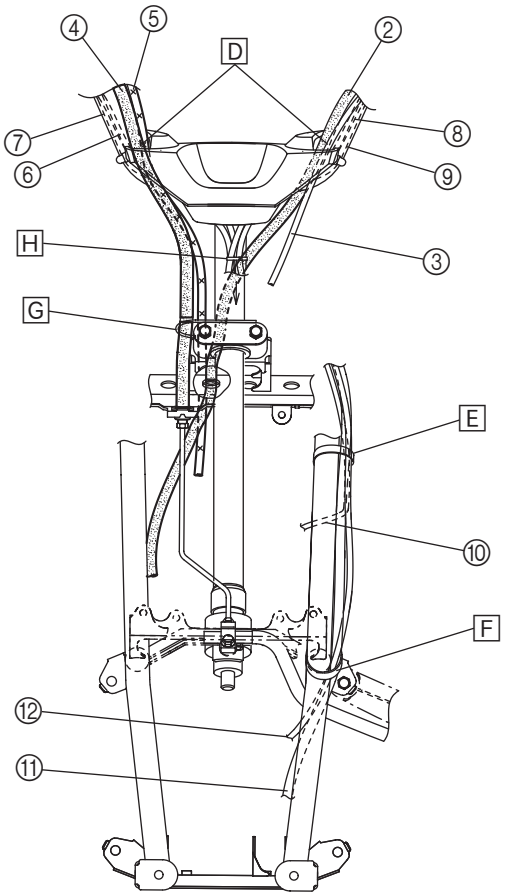

Downloaded from www.Manualslib.com manuals search engine

① Park brake light switch
② On-command four-wheel drive switch and differential gear lock switch lead
③ Headlight lead
④ Coolant reservoir breather hose
⑤ Differential gear case breather hose
⑥ Fan motor breather hose
⑦ Main switch lead
⑧ Auxiliary DC jack lead

A To the front brake light switch, on-command four-wheel drive switch and differential gear lock switch, handlebar switch, and rear brake light switch.
B After routing all leads and couplers fasten them together with a plastic band.
C Pass the on-command four-wheel drive switch and differential gear lock switch lead and headlight lead through the guide on the front fender.
D Pass the coolant reservoir breather hose and differential gear case breather hose through the guide on the front fender.

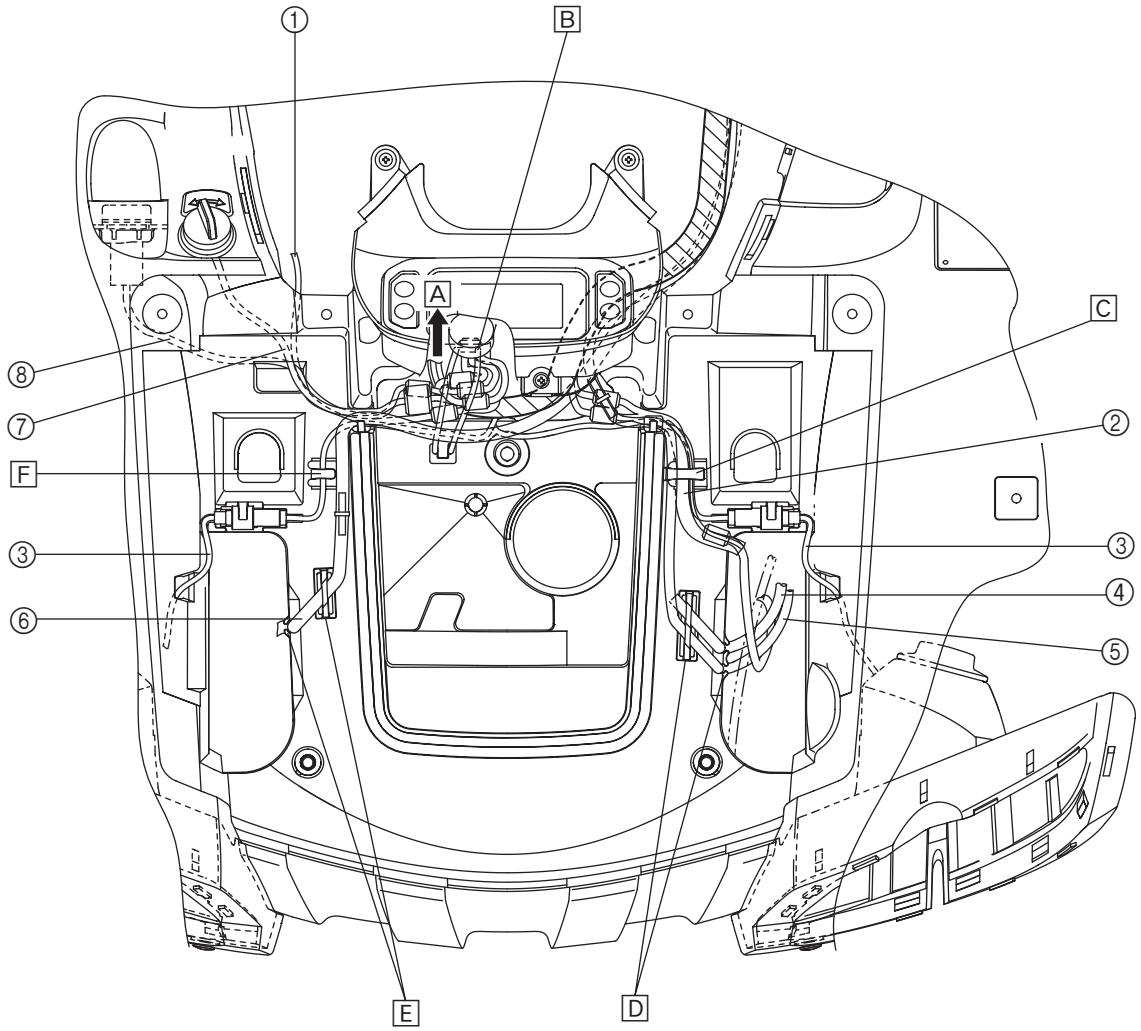

Downloaded from www.Manualslib.com manuals search engine

E Pass the fan motor breather hose through the guide on the front fender.
F Pass the headlight lead through the guide on the front fender.

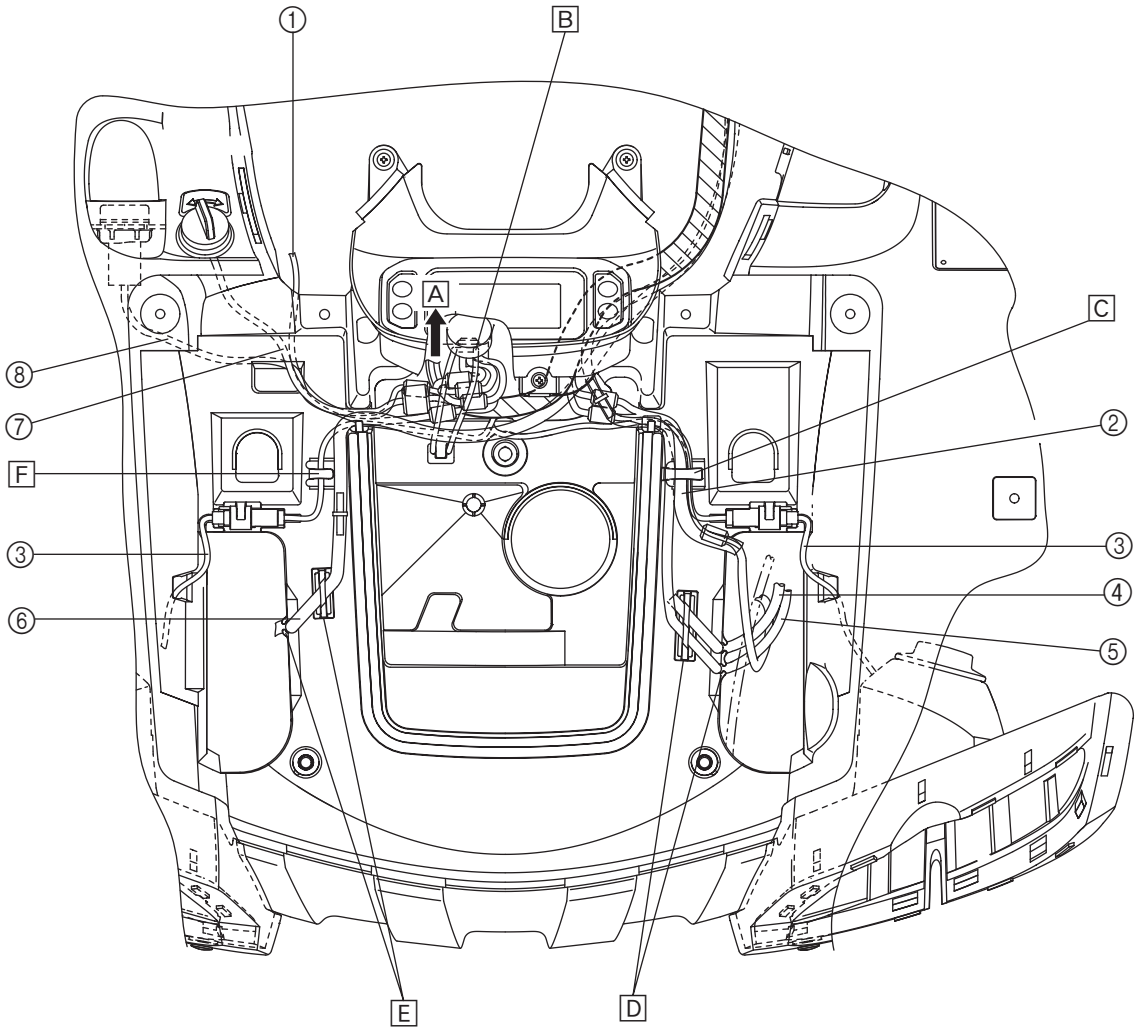

Downloaded from www.Manualslib.com manuals search engine

① Coolant reservoir hose
② Fan motor lead
③ Ignition coil coupler
④ Starter cable
⑤ Fuel tank breather hose
⑥ Coolant reservoir breather hose
⑦ Gear motor lead
⑧ Differential gear case breather hose
⑨ Thermo switch 2 lead

A Connect the ignition coil coupler under the front fender.
B Pass the starter cable through the cable guide at the front of plastic cover.
C Route the fuel tank breather hose behind the plastic cover.
D Insert the fuel tank breather hose into the hole into the handlebar cover.
E Make sure that the starter cable does not have any slack between the cable holder plastic cover and the plastic clamp.

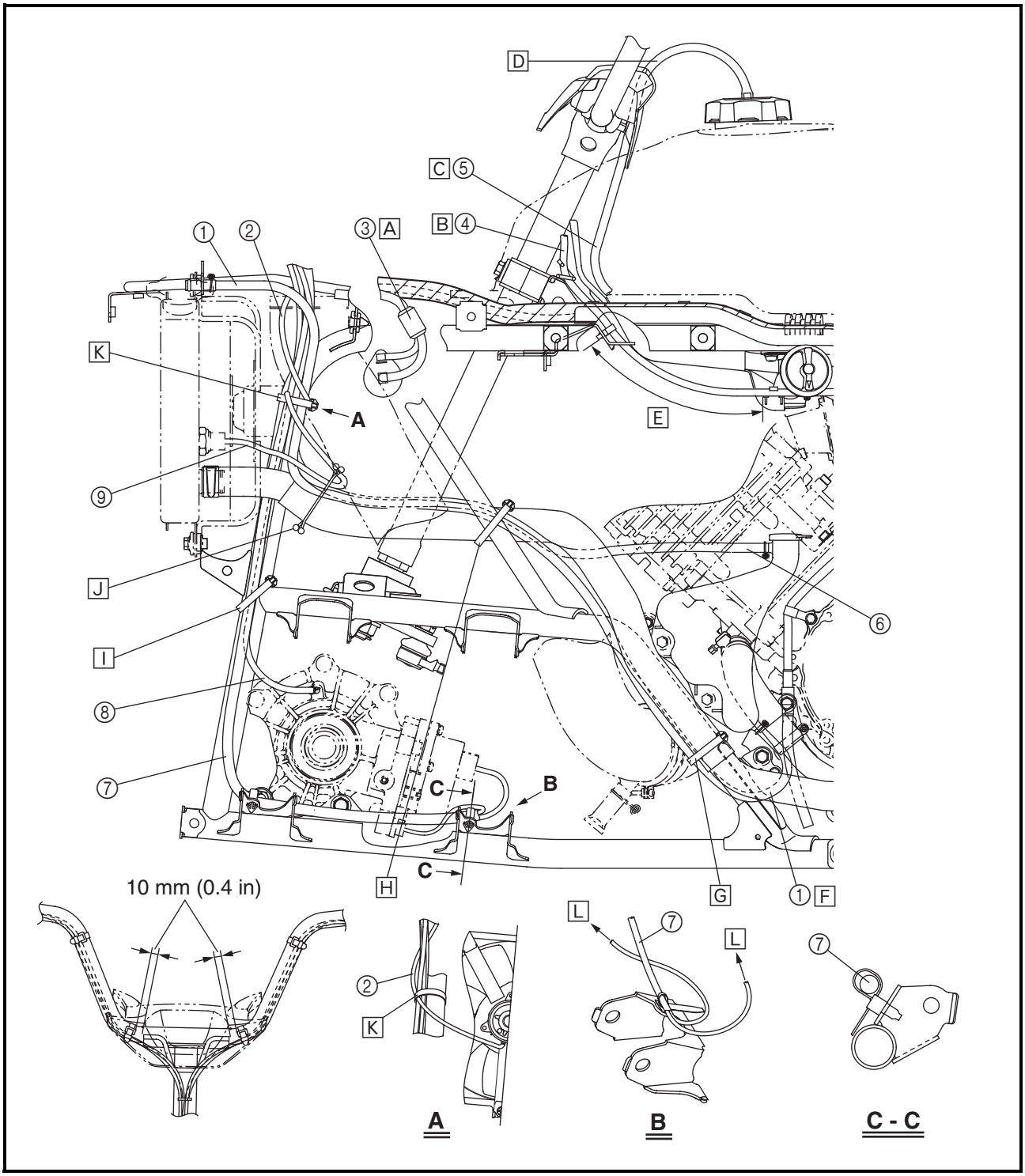

Downloaded from www.Manualslib.com manuals search engine

[F] Slacken the coolant reservoir hose, and then insert it between the frame and the water pump inlet. Be sure not to pinch the hose.
[G] Fasten the coolant reservoir hose and water pump inlet hose with a plastic band. Be sure to not pinch the hoses. Install the plastic band facing inward.
[H] Fasten the coolant reservoir breather hose, coolant reservoir hose, and water pump inlet hose with a plastic band. Be sure not to pinch the hoses. Install the plastic band facing inward.
[I] Fasten the gear motor lead and differential gear case breather hose with a plastic band. Be sure not to pinch the hose. Install the plastic band facing inward.
[J] Clamp the water pump inlet hose and thermo switch 2 lead with a plastic clamp.
[K] Fasten the thermo switch 2 lead, fan motor lead, coolant reservoir breather hose, coolant reservoir hose, gear motor lead, and differential gear case breather hose with a plastic band. Install the plastic band facing inward.
[L] To the differential gear

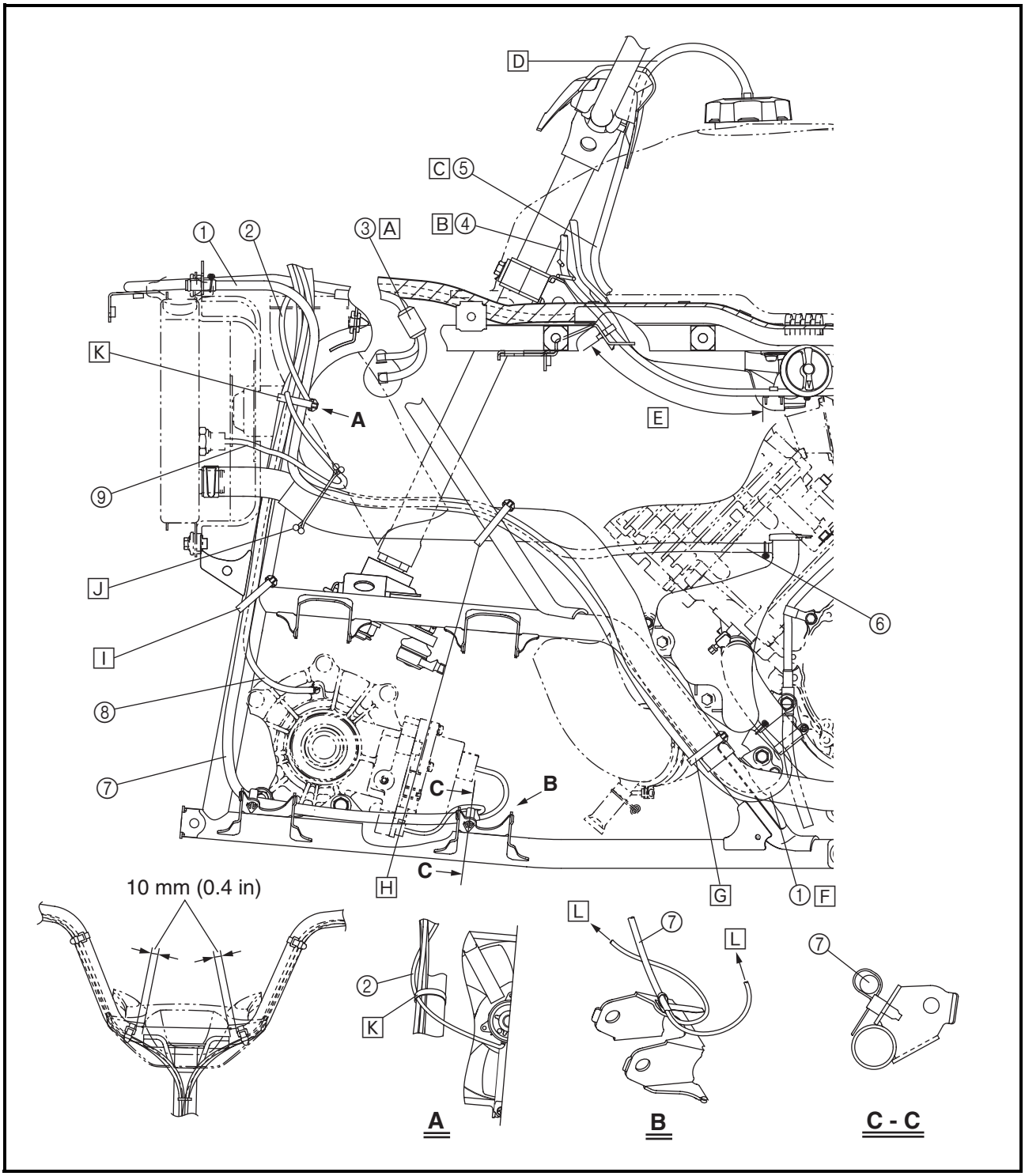

Downloaded from www.Manualslib.com manuals search engine

① Fuel sender lead
② Differential gear case breather hose
③ Vacuum chamber breather hose
④ Starter motor lead
⑤ Wireharness
⑥ Gear position switch lead
⑦ Final drive gear case breather hose
⑧ Ground lead
⑨ Speed sensor lead
⑩ AC magneto lead
⑪ Carburetor breather hose
⑫ Starter cable
⑬ Fuel hose
⑭ Thermo switch 1 lead
⑮ Reverse switch lead
⑯ AC magneto coupler
⑰ Gear position switch coupler
⑱ Speed sensor coupler
⑲ Radiator fan breather hose
⑳ Rectifier/regulator lead
㉑ Water pump breather hose

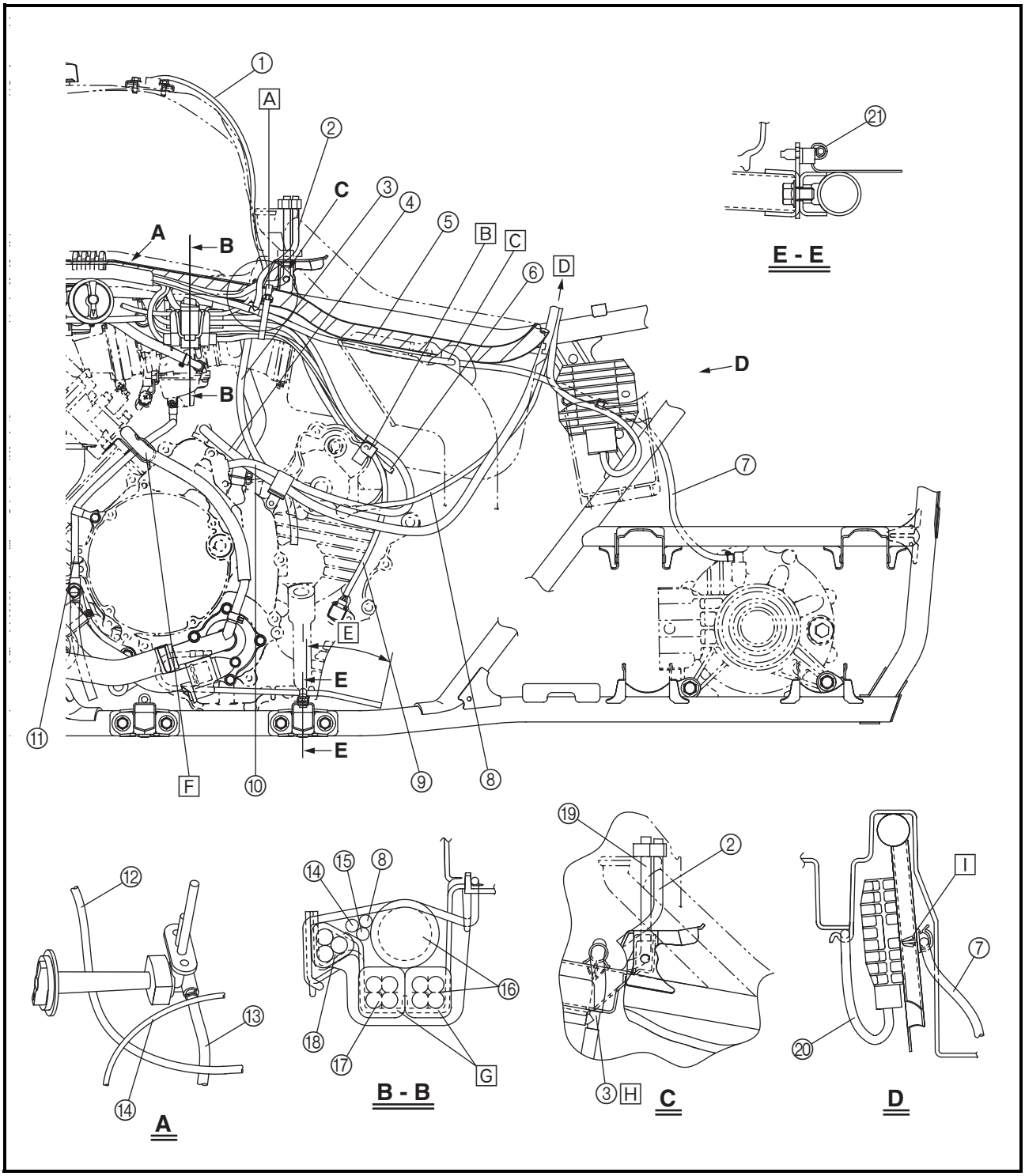

Downloaded from www.Manualslib.com manuals search engine

[A] Fasten the final drive gear case breather hose, speed sensor lead, ground lead, gear position switch lead, AC magneto lead, wire harness, and reverse indicator light lead with a plastic locking tie. Be careful not to pinch the breather hose.
[B] Fasten the leads in the following order: ground lead, reverse switch lead, speed sensor lead, gear position switch lead, and AC magneto lead.
[C] Pass the final drive gear case breather hose through the hole in air duct assembly 3.
[D] To the rear fender
[E] 70 ~ 90 mm (2.8 ~ 3.5 in)
[F] Clamp the thermostat assembly breather hose and carburetor breather hose with the cable guide.
[G] Face the coupler release tab upward.

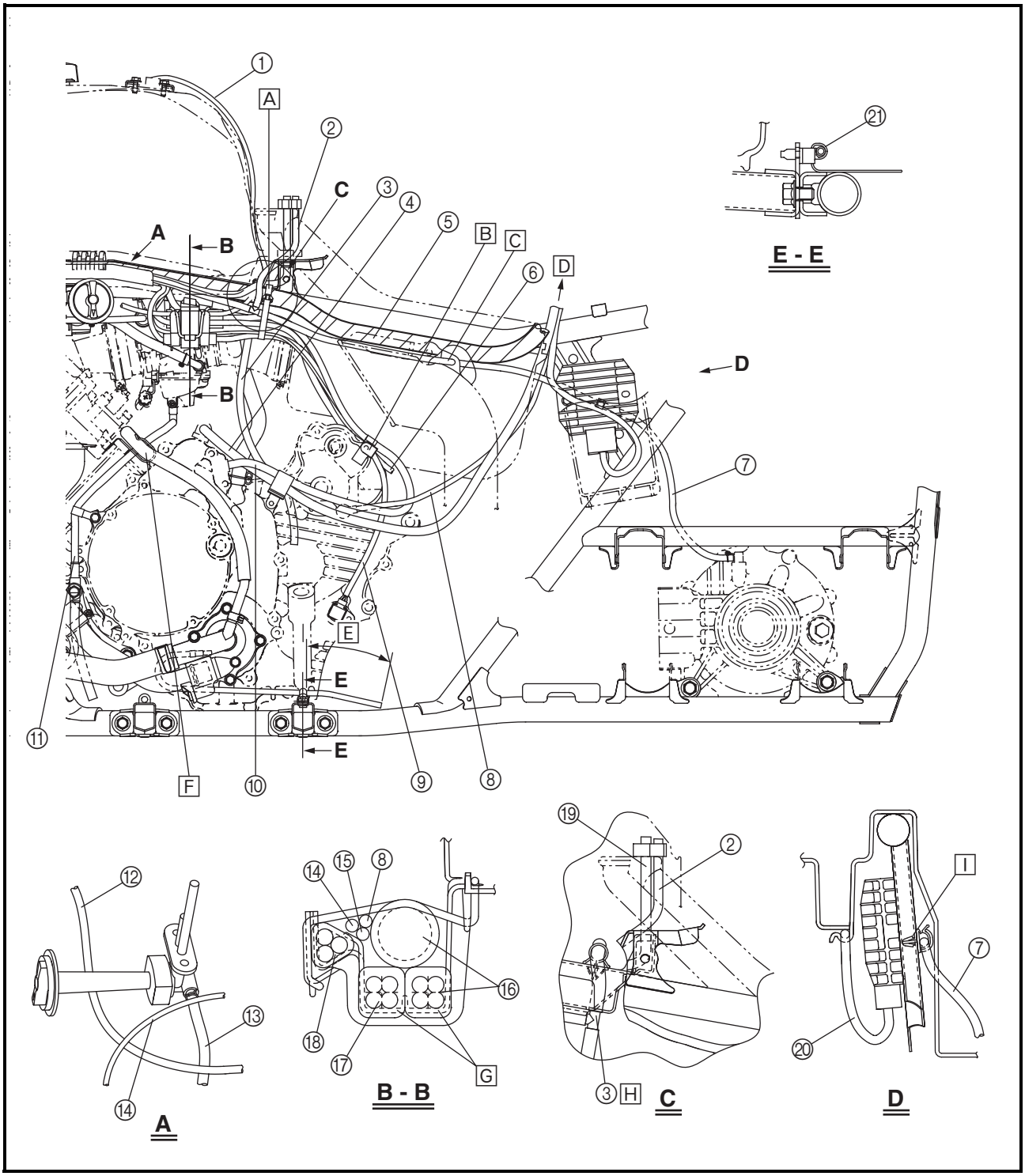

Downloaded from www.Manualslib.com manuals search engine

H Pass the vacuum chamber breather hose through the plastic cover hole.
I Insert a clamp into the third hole from the top of the rectifier/regulator bracket, and then clamp the final drive gear case breather hose with the clamp.

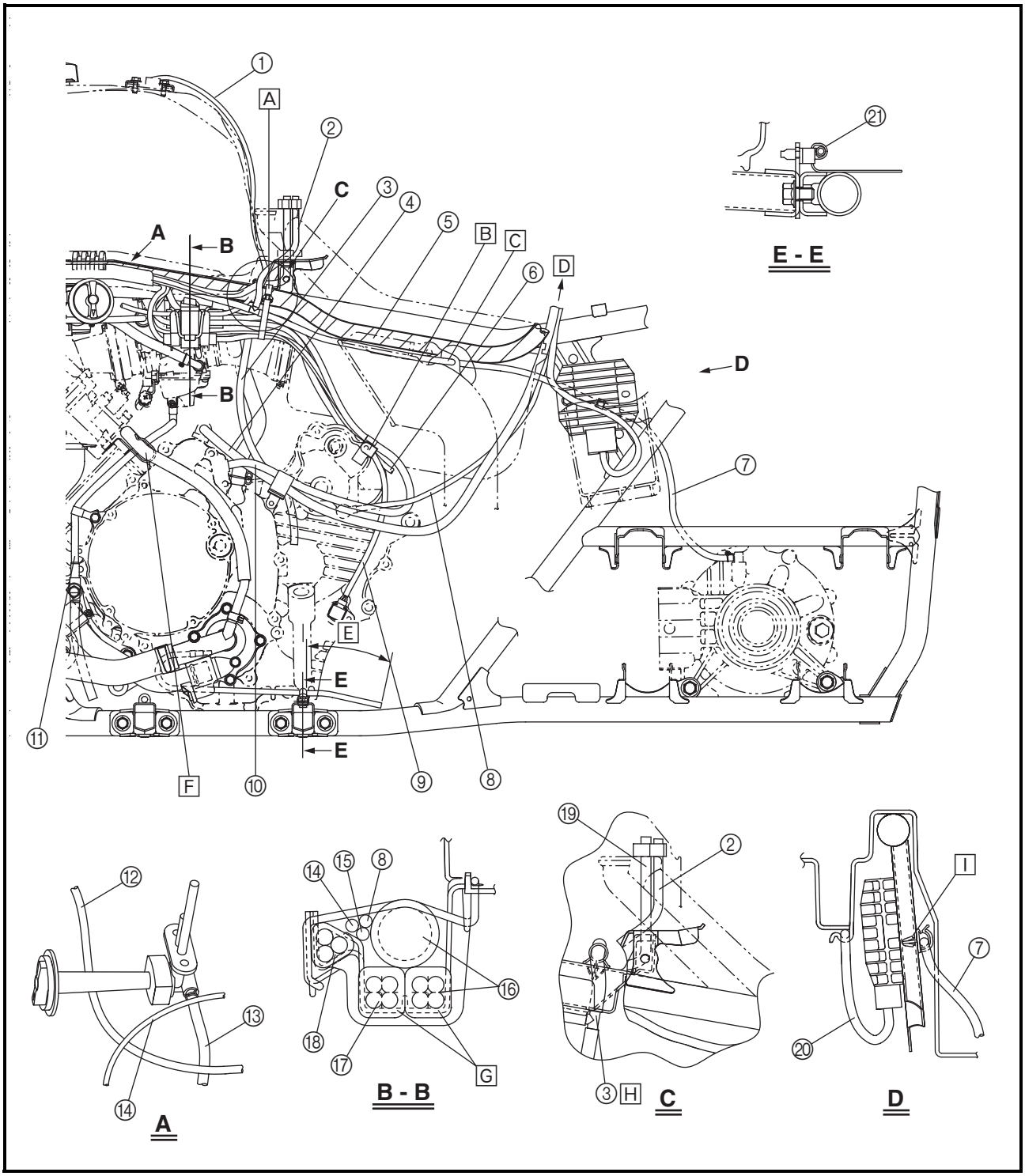

Downloaded from www.Manualslib.com manuals search engine

① Gear position switch
② Reverse switch
③ Crankcase breather hose
④ Select lever control cable
⑤ Rear brake cable
⑥ Front brake hose
⑦ Rear brake light switch lead
⑧ Spark plug lead
⑨ Fan motor breather hose
⑩ Fan motor lead
⑪ Bake fluid reservoir hose
⑫ Rear brake hose

A Pass the rear brake cable and throttle cable through the cable guide.
B Pass the rear brake light switch lead and the main switch lead and auxiliary DC jack lead over the front fender.

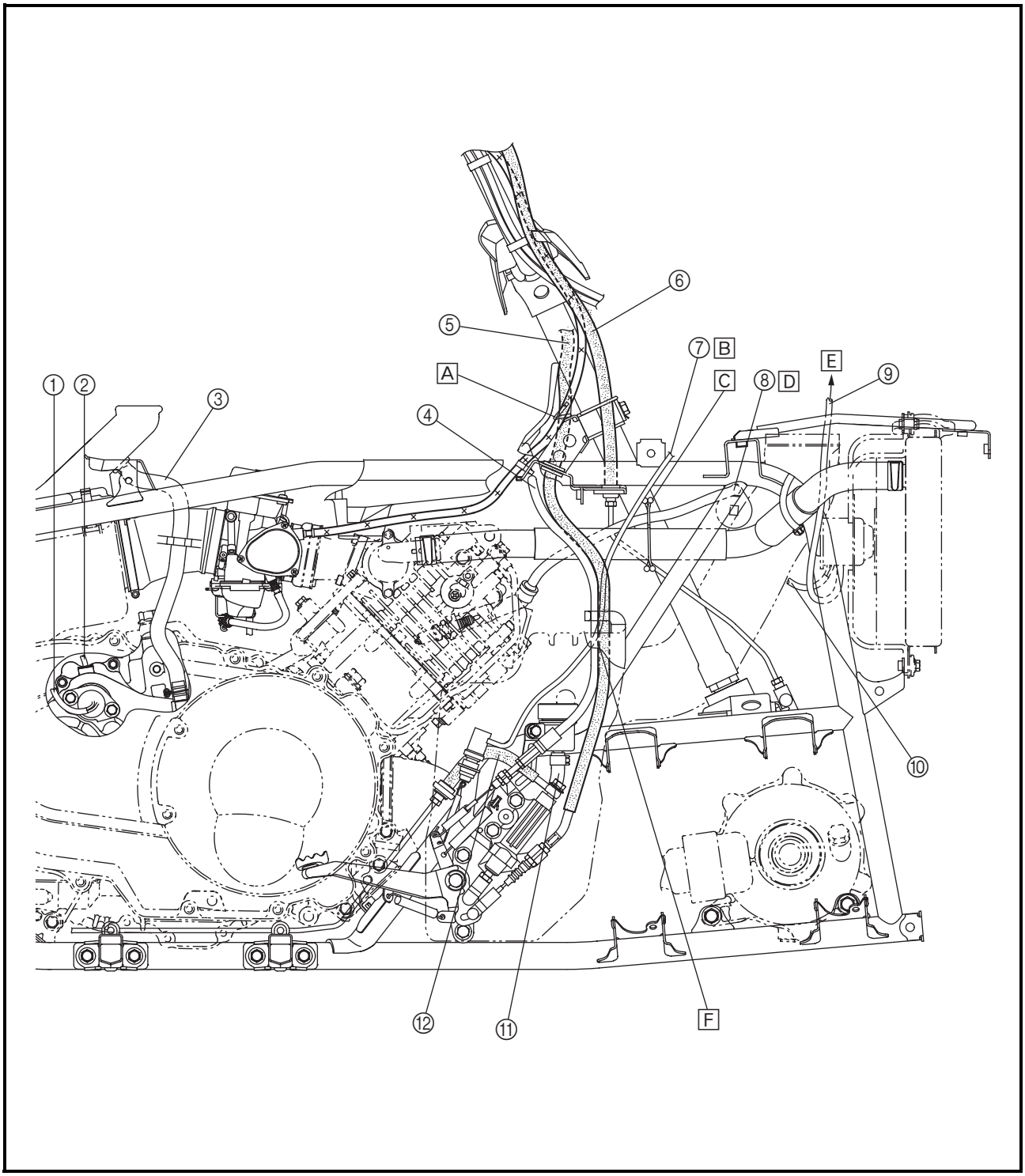

Downloaded from www.Manualslib.com manuals search engine

[C] Clamp the spark plug lead and radiator inlet hose with a plastic clamp.
[D] When installing the ignition coil, face the spark lead to the right side of the frame.
[E] To the rear fender hole
[F] Pass the brake light switch lead on the inside of the rear brake cable and select lever control cable, and through the cable guide of the brake master cylinder cover.

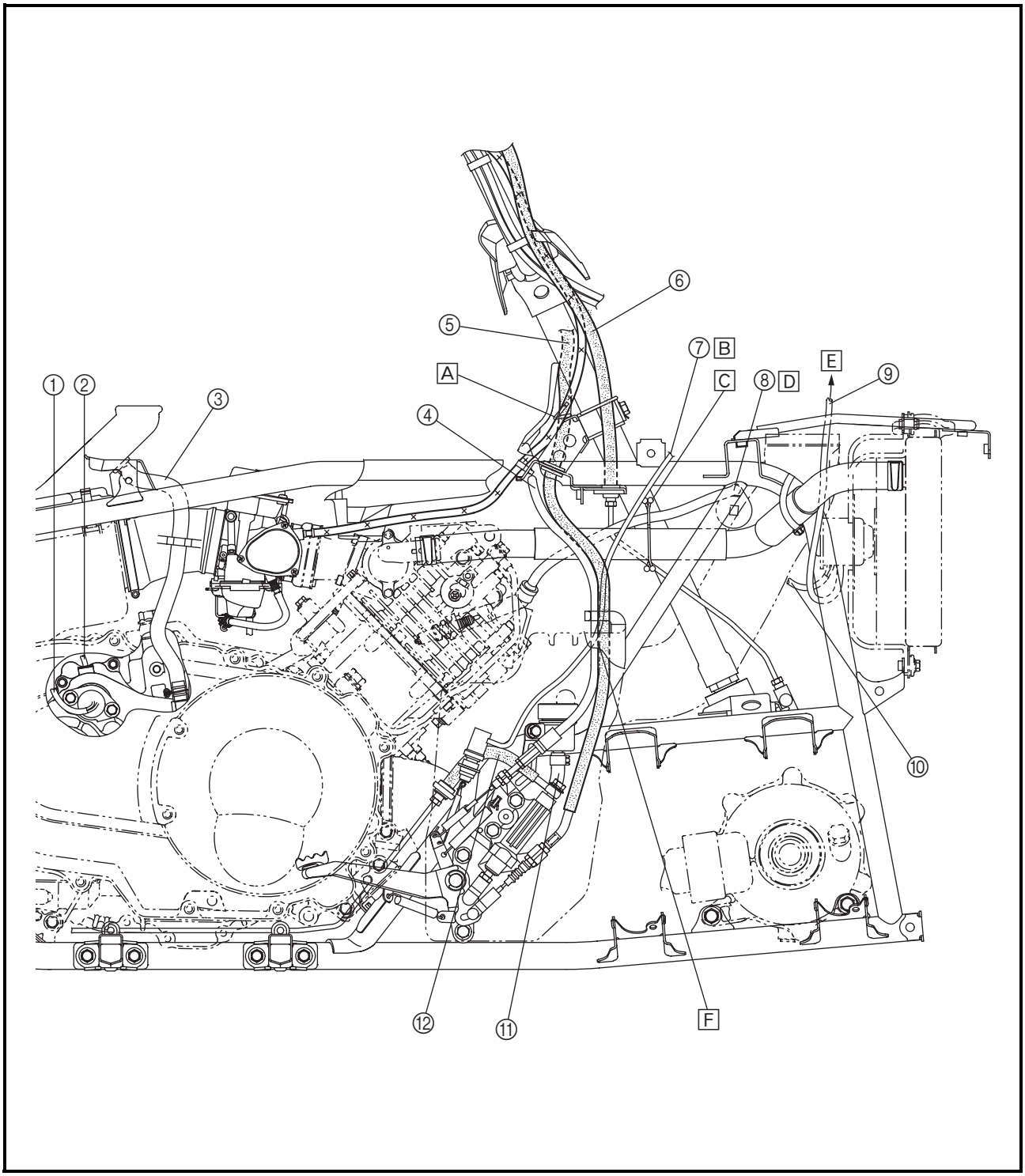

Downloaded from www.Manualslib.com manuals search engine

① Negative battery lead
② Tail/brake light lead
③ Fuse box
④ Four-wheel drive relay 3
⑤ Four-wheel drive relay 2
⑥ Four-wheel drive relay 1
⑦ Positive battery lead
⑧ Starter motor lead
⑨ Wire harness

A Pass the tail/brake light lead through the lead guide.
B Position the wire harness tape at the end of the rear fender guide.
C Pass the wire harness through the cable guide of rear fender.

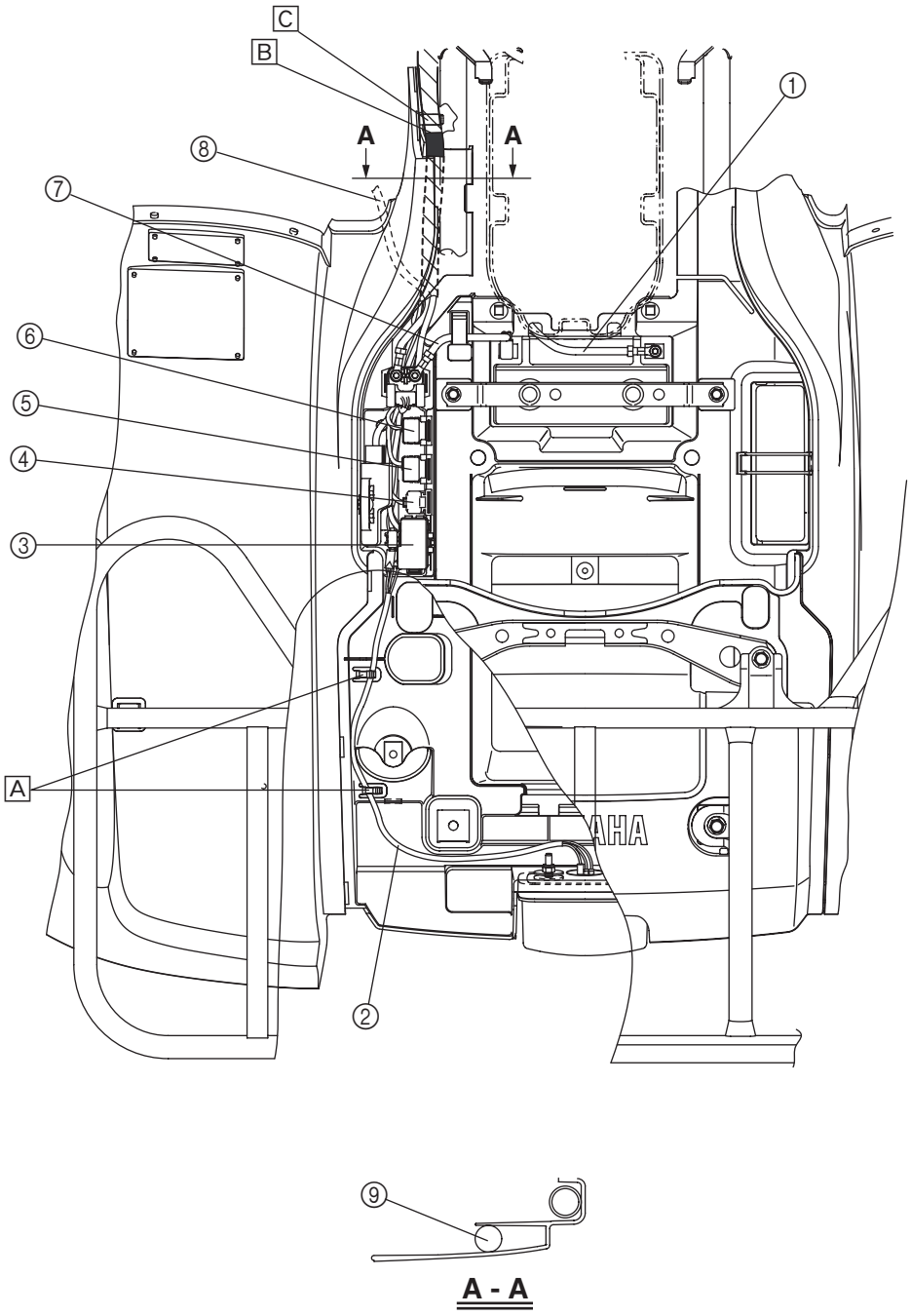

Downloaded from www.Manualslib.com manuals search engine

① Front brake hose
② Throttle cable
③ Thermo switch 1 lead
④ Crankcase breather hose
⑤ Fuel sender lead
⑥ Differential gear case breather hose
⑦ Starter cable
⑧ Select lever control cable
⑨ Wire harness
⑩ Fan motor breather hose

[A] Pass the thermo sensor 1 lead through the lead guide.
[B] Pass the crankcase breather hose through the hose guide.
[C] Pass the fuel sender lead through the lead guide.
[D] Pass the select lever control cable through the hole of the select lever unit bracket.
[E] Clamp the starter cable with a plastic clamp.
[F] Pass the throttle cable through the cable guide.

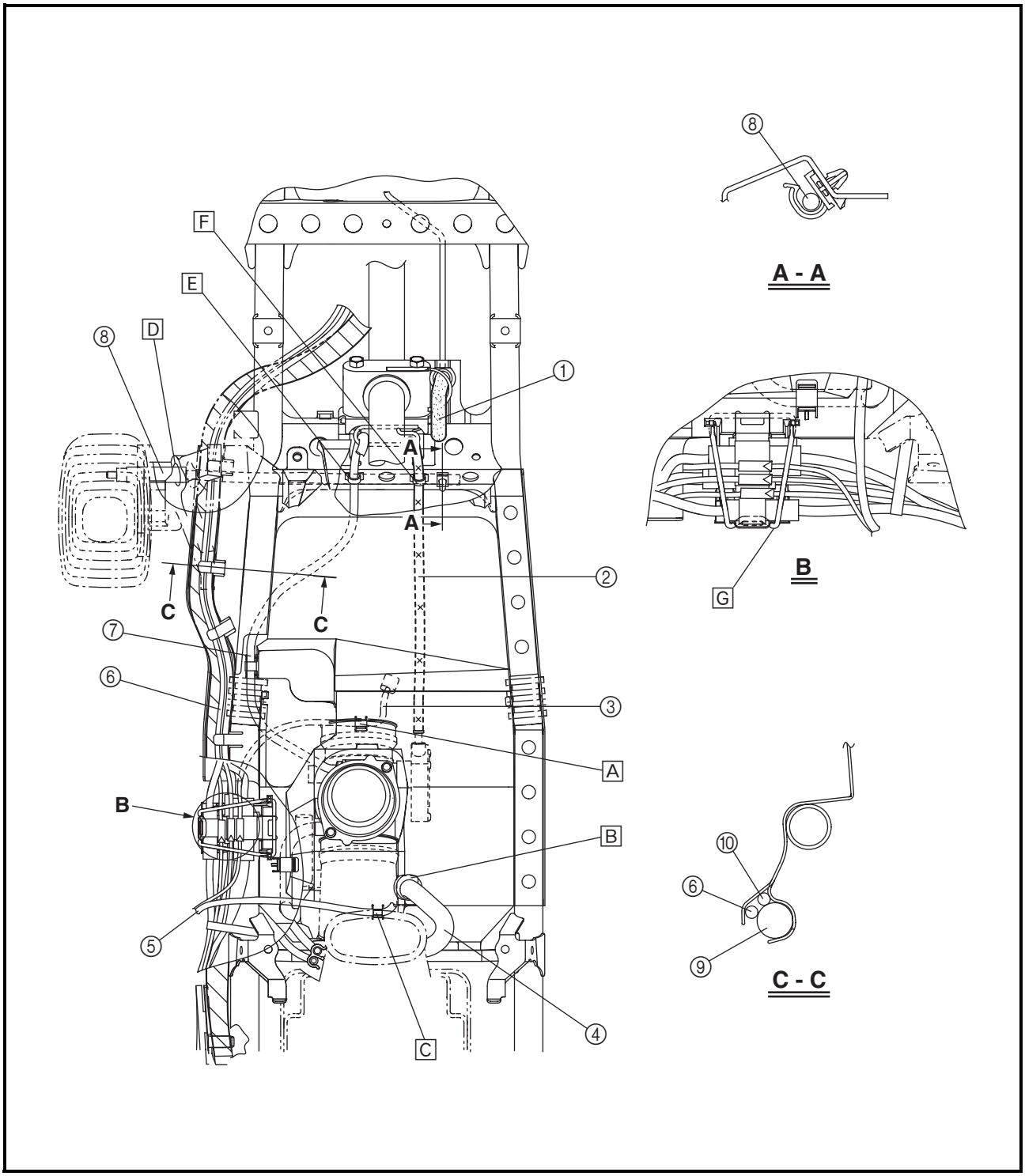

Downloaded from www.Manualslib.com manuals search engine

[G] Fasten the speed sensor coupler, thermo switch 1 lead, reverse switch lead, ground lead, gear position switch lead, and AC magneto couplers with a band.

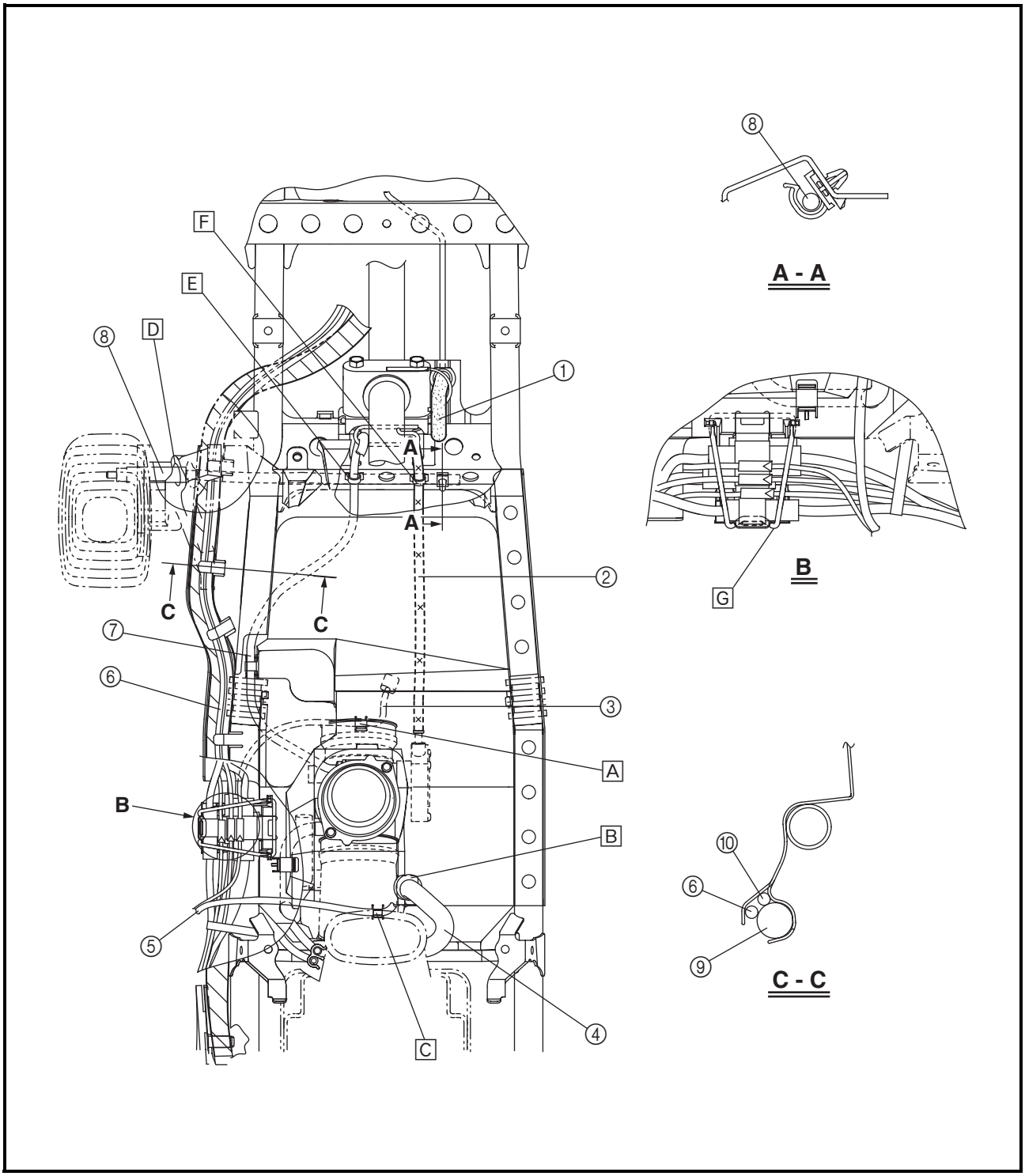

Downloaded from www.Manualslib.com manuals search engine

EB300000

PERIODIC CHECKS AND ADJUSTMENTS

INTRODUCTION

This chapter includes all information necessary to perform recommended inspections and adjustments. These preventive maintenance procedures, if followed, will ensure more reliable vehicle operation and a longer service life. The need for costly overhaul work will be greatly reduced. This information applies to vehicles already in service as well as to new vehicles that are being prepared for sale. All service technicians should be familiar with this entire chapter.

EB301000

PERIODIC MAINTENANCE/LUBRICATION INTERVALS

ITEM	ROUTINE	Whichever comes first ⇨		INITIAL			EVERY	
			mile (km)	200 (320)	750 (1,200)	1,500 (2,400)	1,500 (2,400)	3,000 (4,800)
			hours	20	75	150	150	300
Valves* **(See page 3-13)**	• Check valve clearance. • Adjust if necessary.			○		○	○	○
Cooling system **(See page 3-31)**	• Check coolant leakage. • Repair if necessary. • Replace coolant every 24 months.			○	○	○	○	○
Spark plug **(See page 3-22)**	• Check condition. • Adjust gap and clean. • Replace if necessary.			○	○	○	○	○
Air filter **(See page 3-29)**	• Clean. • Replace if necessary.			Every 20 ~ 40 hours (More often in wet or dusty areas.)				
Carburetor* **(See page 3-16)**	• Check and adjust idle speed/starter operation. • Adjust if necessary.				○	○	○	○
Crankcase breather system*	• Check breather hose for cracks or damage. • Replace if necessary.					○	○	○
Exhaust system*	• Check for leakage. • Retighten if necessary. • Replace gasket(s) if necessary.					○	○	○
Spark arrester **(See page 3-37)**	• Clean.					○	○	○
Fuel line*	• Check fuel hose for cracks or damage. • Replace if necessary.					○	○	○
Engine oil **(See page 3-26)**	• Replace (warm engine before draining).			○		○	○	○
Engine oil filter cartridge	• Replace.			○		○		○
Final gear oil **(See page 3-48)** **Differential gear oil** **(See page 3-49)**	• Check oil level/oil leakage. • Replace.			○				○
Front brake* **(See page 3-39)**	• Check operation/fluid leakage/see NOTE page 3-2. • Correct if necessary.			○	○	○	○	○
Rear brake* **(See page 3-39)**	• Check operation/fluid leakage/see NOTE page 3-2. • Correct if necessary.			○	○	○	○	○
V-belt* **(See page 3-36)**	• Check operation. • Check for cracks or damage.			○			○	○
Wheels* **(See page 3-56)**	• Check balance/damage/runout. • Repair if necessary.			○		○	○	○
Wheel bearing*	• Check bearing assemblies for looseness/damage. • Replace if damaged.			○		○	○	○

Downloaded from www.Manualslib.com manuals search engine

ITEM	ROUTINE	Whichever comes first ⇨		INITIAL			EVERY	
			mile (km)	200 (320)	750 (1,200)	1,500 (2,400)	1,500 (2,400)	3,000 (4,800)
			hours	20	75	150	150	300
Front and rear suspension* (See page 8-48, 8-53)	• Check operation. • Correct if necessary.					○		○
Steering system* (See page 3-51)	• Check operation/replace if damaged. • Check toe-in/adjust if necessary.			○	○	○	○	○
Rear upper and lower knuckle pivots*	• Lubricate.**					○	○	○
Drive shaft universal joint*	• Lubricate.**					○	○	○
Engine mount*	• Check for cracks or damage.					○	○	○
Front and rear axle boots*	• Check operation. • Replace if damaged.			○				○
Stabilizer bushes*	• Check for cracks or damage.					○	○	○
Fittings and Fasteners*	• Check all chassis fittings and fasteners. • Correct if necessary.			○	○	○	○	○

* It is recommended that these items be serviced by a Yamaha dealer.
** Lithium-soap-based grease

NOTE:

- Recommended brake fluid: DOT 4
- Brake fluid replacement:

1. When disassembling the master cylinder or caliper, replace the brake fluid. Normally check the brake fluid level and add fluid as required.
2. On the inner parts of the master cylinder and caliper, replace the oil seals every two years.
3. Replace the brake hoses every four years, or if cracked or damaged.

⚠ WARNING

Indicates a potential hazard that could result in serious injury or death.

Downloaded from www.Manualslib.com manuals search engine

SEAT, CARRIERS, FENDERS AND FUEL TANK

SEAT AND SIDE PANELS

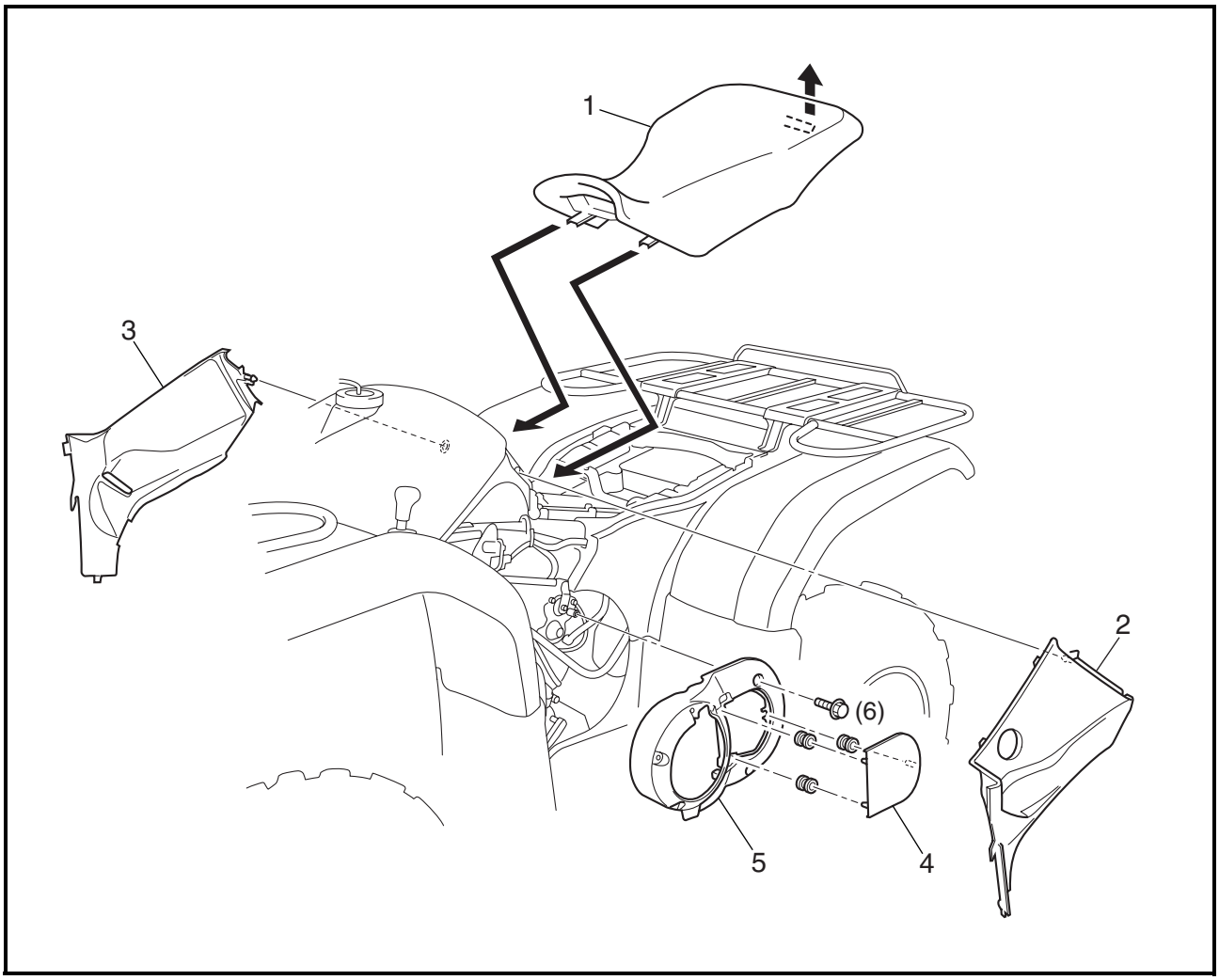

Order	Job name/Part name	Q'ty	Remarks
	Removing the seat and side panels		Remove the parts in the order below.
1	Seat	1	**NOTE:** Pull up the seat lock lever, then pull up on the rear of the seat.
2	Fuel tank side panel (left)	1	
3	Fuel tank side panel (right)	1	
4	Engine side panel	1	
5	Engine side cover	1	
			For installation, reverse the removal procedure.

Downloaded from www.Manualslib.com manuals search engine

FRONT CARRIER, FRONT BUMPER AND FRONT GRILL

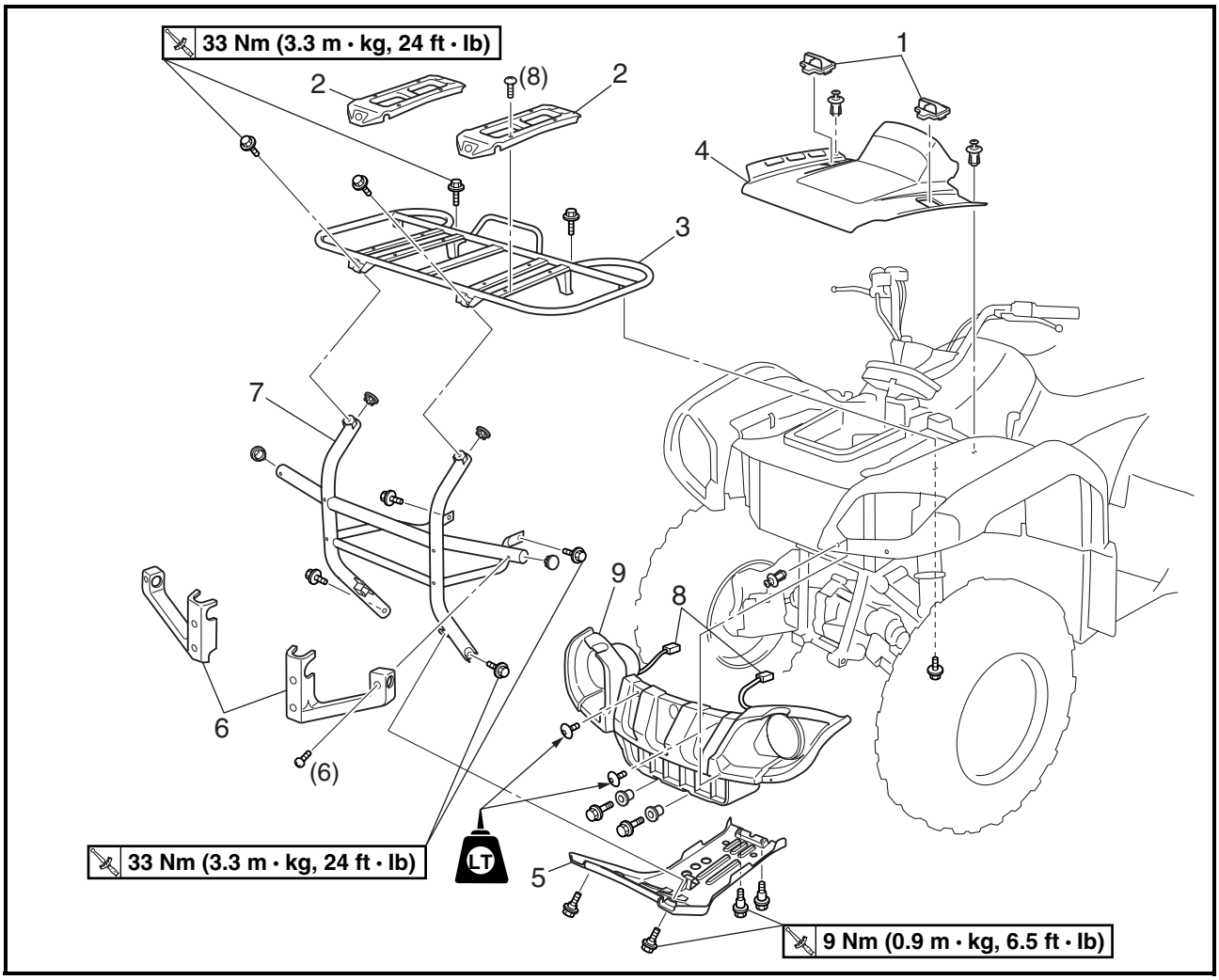

Order	Job name/Part name	Q'ty	Remarks
	Removing the front carrier, front bumper and front grill		Remove the parts in the order below.
	Seat and fuel tank side panels		Refer to "SEAT AND SIDE PANELS".
1	Cap	2	
2	Front carrier cover	2	
3	Front carrier	1	
4	Front fender panel	1	
5	Engine skid plate (front)	1	
6	Front bumper protector	2	
7	Front bumper	1	
8	Headlight coupler	2	Disconnect.
9	Front grill	1	
			For installation, reverse the removal procedure.

Downloaded from www.Manualslib.com manuals search engine

HANDLEBAR COVER, FUEL TANK COVER AND FRONT FENDER

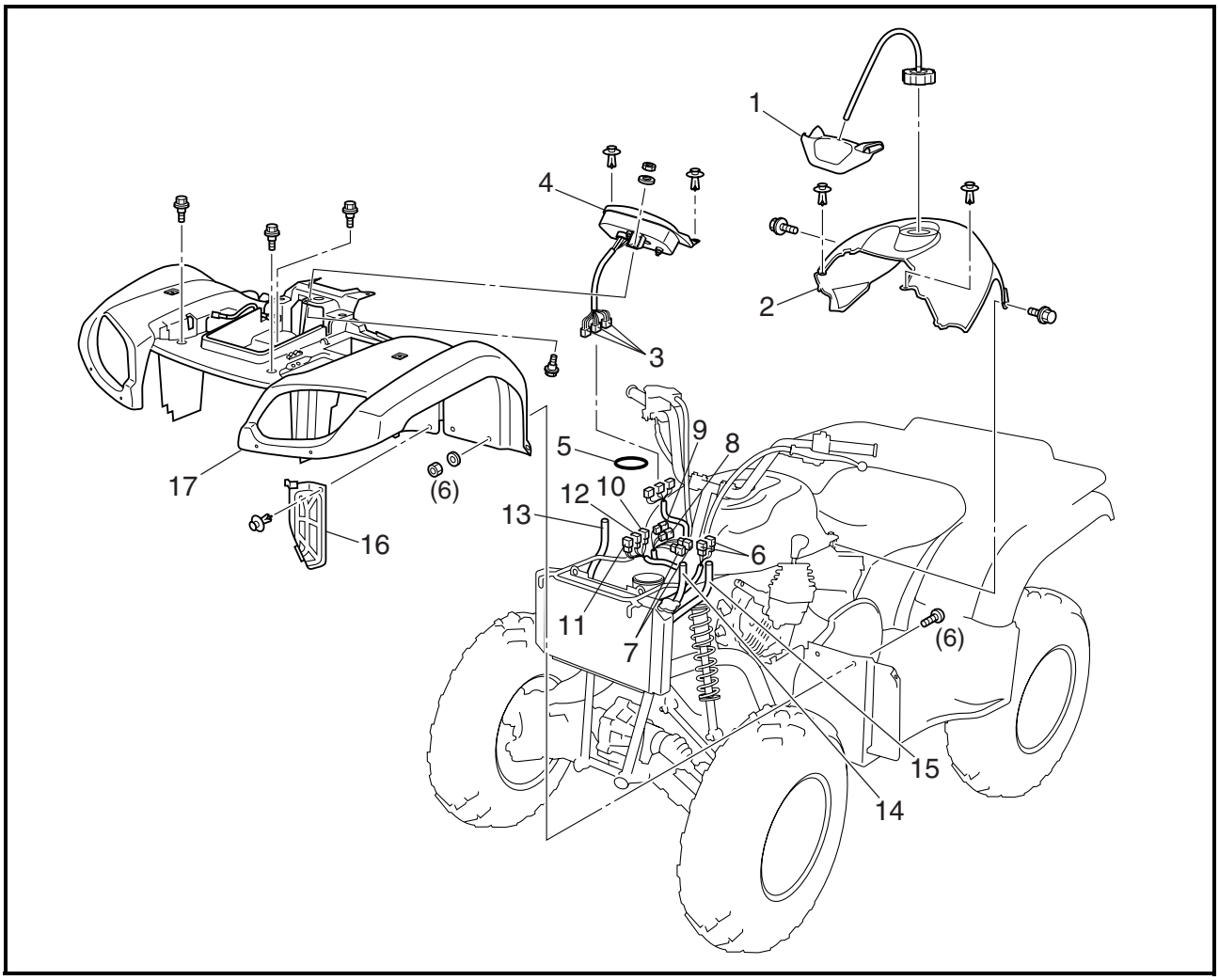

Order	Job name/Part name	Q'ty	Remarks
	Removing the handlebar cover, fuel tank cover and front fender		Remove the parts in the order below.
	Seat and fuel tank side panels		Refer to "SEAT AND SIDE PANELS".
	Front carrier, front bumper and front grill		Refer to "FRONT CARRIER, FRONT BUMPER AND FRONT GRILL".
1	Handlebar cover	1	
2	Fuel tank cover	1	
3	Meter assembly coupler	3	Disconnect.
4	Meter assembly	1	
5	Band	1	
6	Sub-wire harness 1 coupler	2	Disconnect.
7	Handlebar switch (left) coupler	2	Disconnect.

Downloaded from www.Manualslib.com manuals search engine

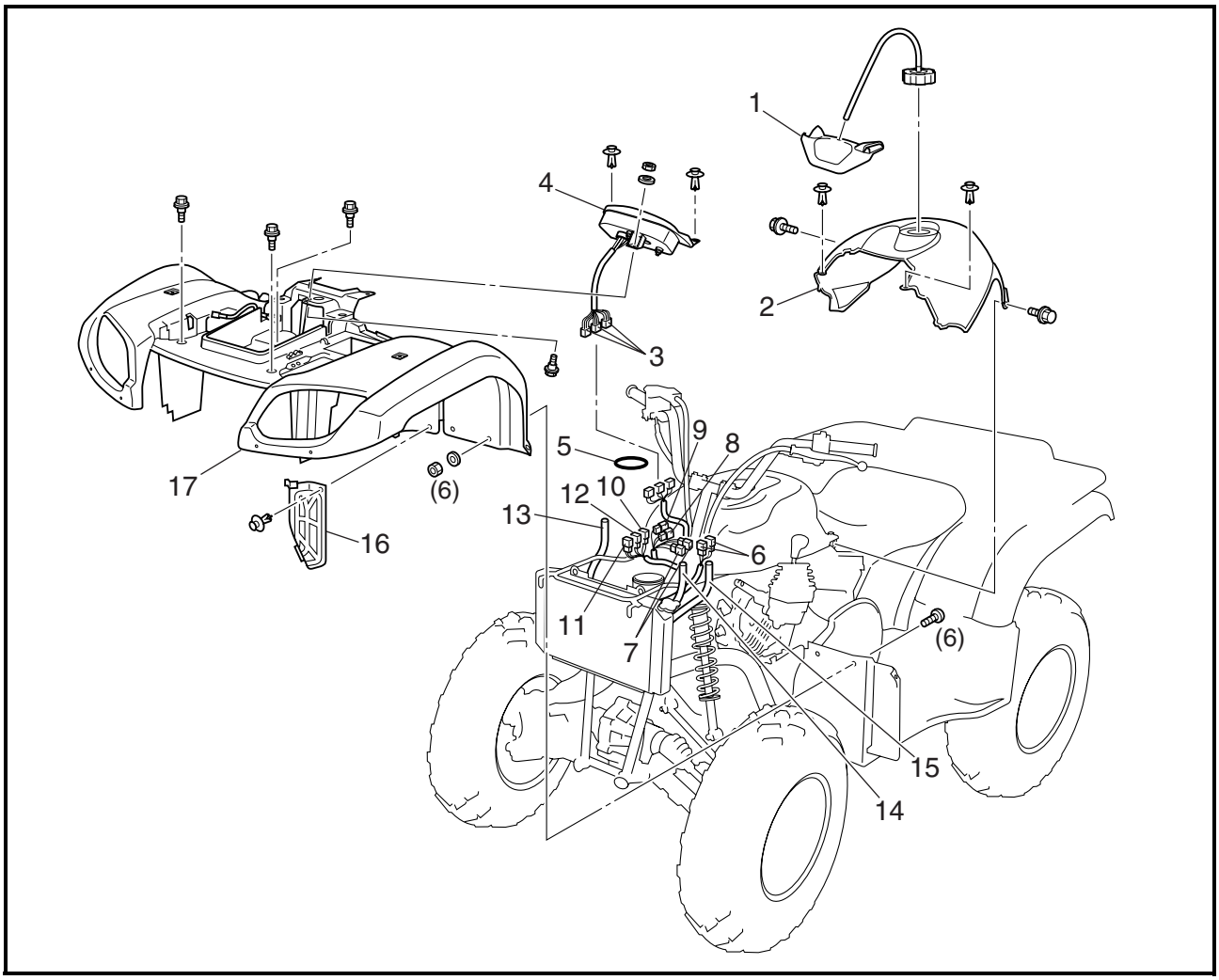

Order	Job name/Part name	Q'ty	Remarks
8	Rear brake switch coupler	1	Disconnect.
9	Front brake light switch coupler	1	Disconnect.
10	Rear brake light switch coupler	1	Disconnect.
11	Main switch coupler	1	Disconnect.
12	Auxiliary DC jack coupler	1	Disconnect.
13	Fan motor breather hose	1	
14	Differential gear case breather hose	1	
15	Coolant reservoir breather hose	1	
16	Coolant reservoir cover	1	
17	Front fender	1	
			For installation, reverse the removal procedure.

Downloaded from www.Manualslib.com manuals search engine

REAR CARRIER AND REAR FENDER

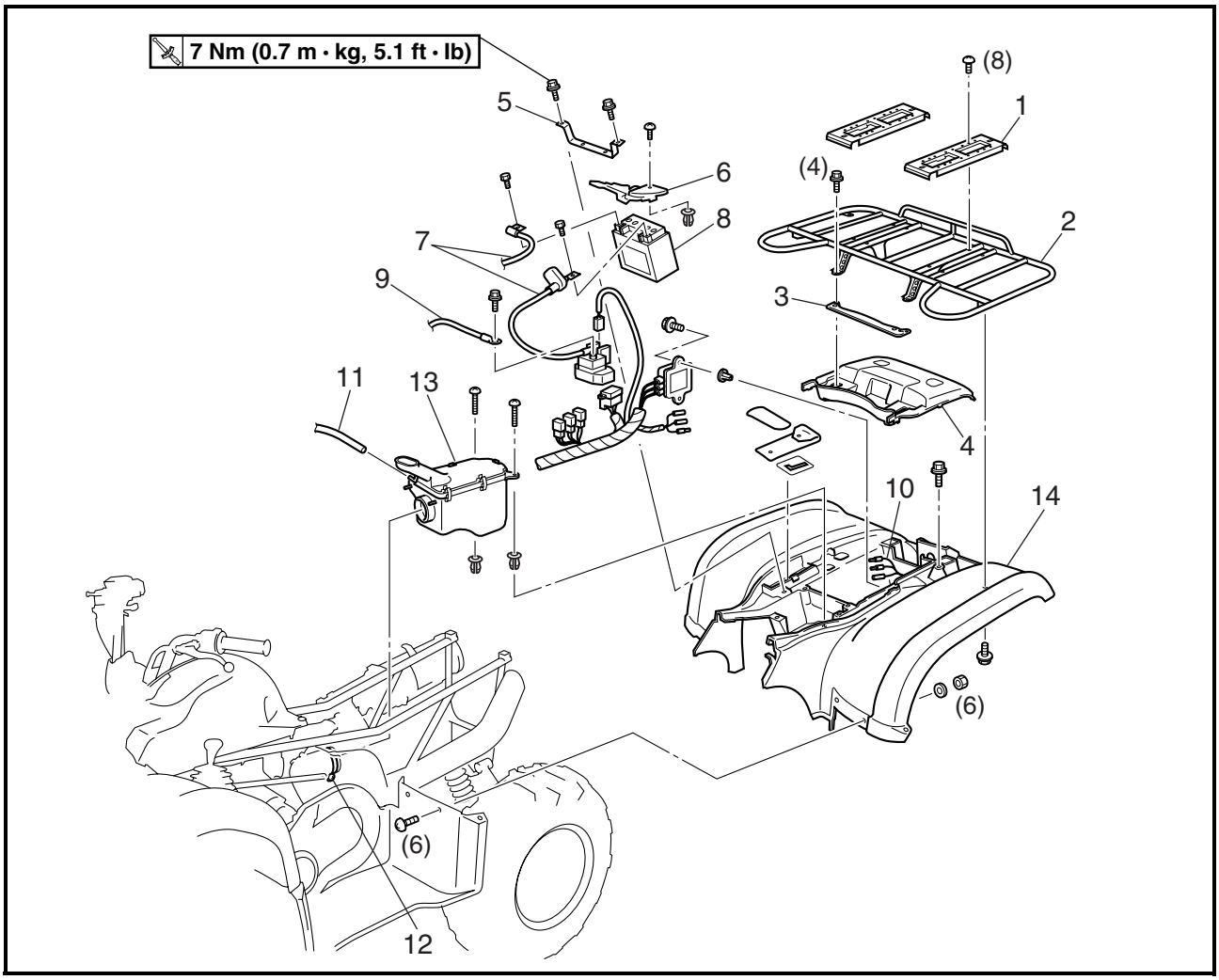

Order	Job name/Part name	Q'ty	Remarks
	Removing the rear carrier and rear fender		Remove the parts in the order below.
	Seat and fuel tank side panels		Refer to "SEAT AND SIDE PANELS".
1	Rear carrier cover	2	
2	Rear carrier	1	
3	Rear carrier bracket	1	
4	Rear fender panel	1	
5	Battery holding bracket	1	
6	Battery lead cover	1	
7	Battery lead	2	Disconnect. **CAUTION:** **First disconnect the negative lead, then disconnect the positive lead.**

Downloaded from www.Manualslib.com manuals search engine

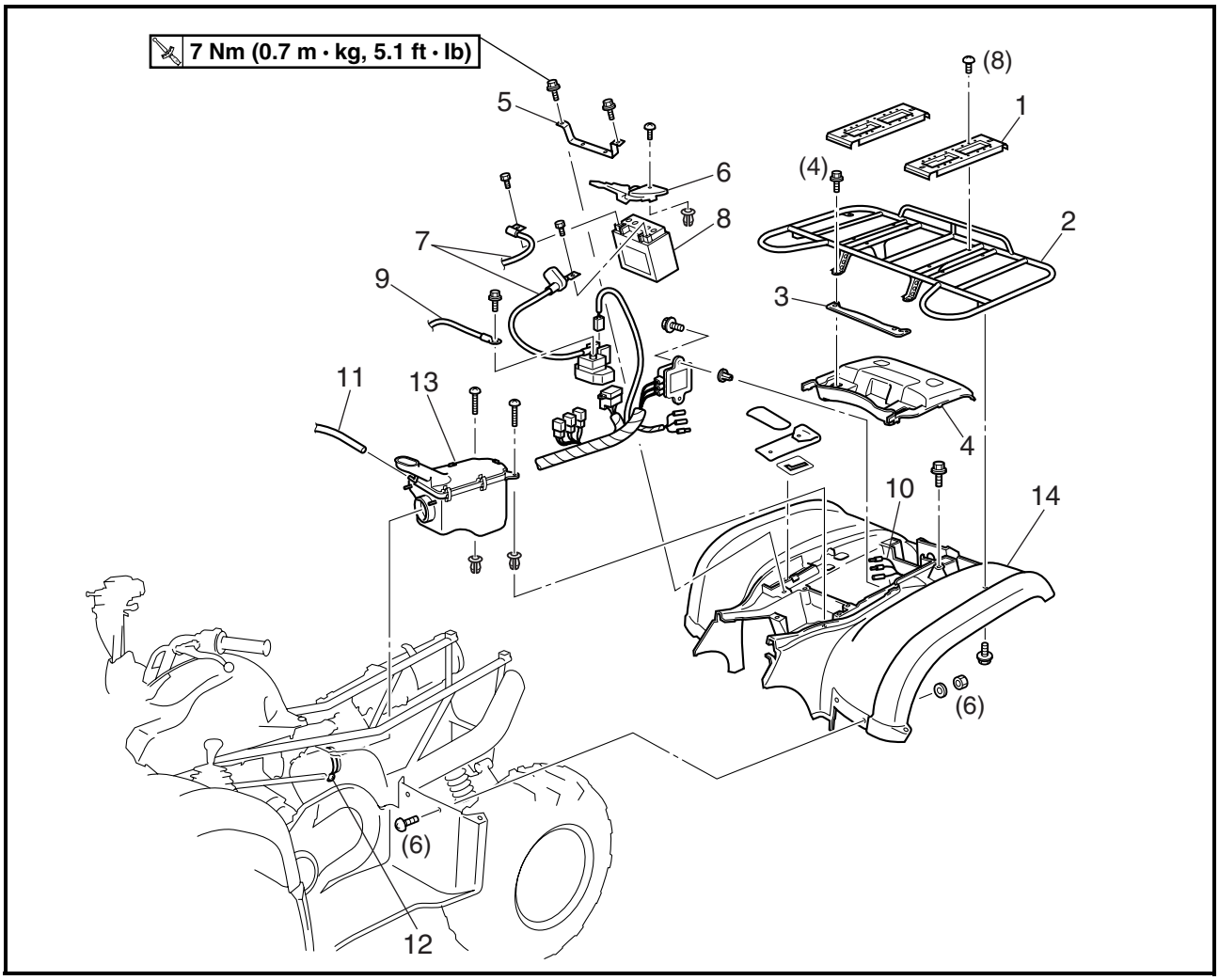

Order	Job name/Part name	Q'ty	Remarks
8	Battery		
9	Starter relay ground lead	1	Disconnect.
10	Taillight connector	3	Disconnect.
11	Crankcase breather hose	1	
12	Clamp screw	1	Loosen.
13	Air filter case	1	
14	Rear fender	1	
			For installation, reverse the removal procedure.

Downloaded from www.Manualslib.com manuals search engine

ENGINE SKID PLATE (CENTER) AND ENGINE SKID PLATE (REAR)

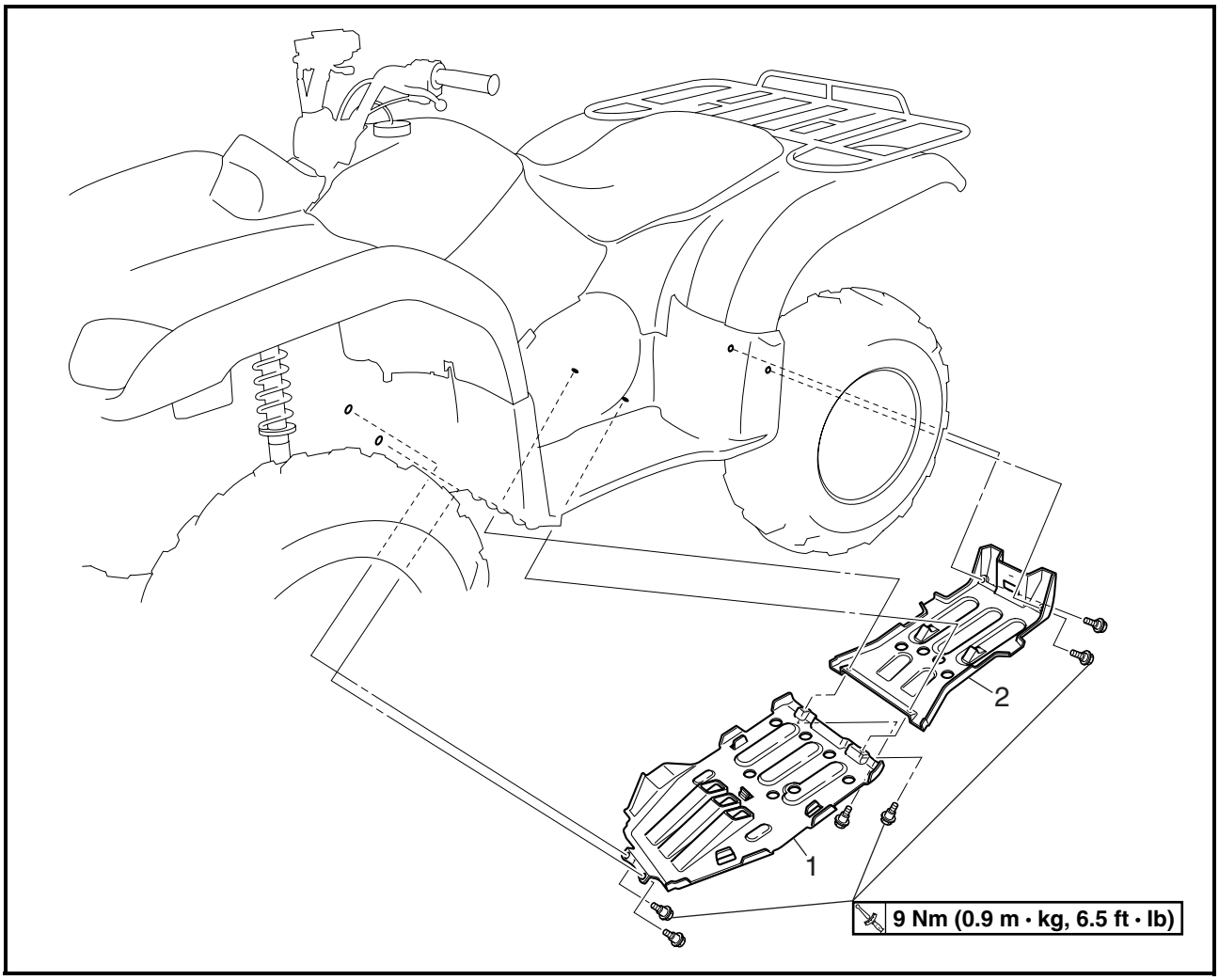

Order	Job name/Part name	Q'ty	Remarks
	Removing the engine skid plate (center) and engine skid plate (rear)		Remove the parts in the order below.
1	Engine skid plate (center)	1	
2	Engine skid plate (rear)	1	
			For installation, reverse the removal procedure.

Downloaded from www.Manualslib.com manuals search engine

FUEL TANK

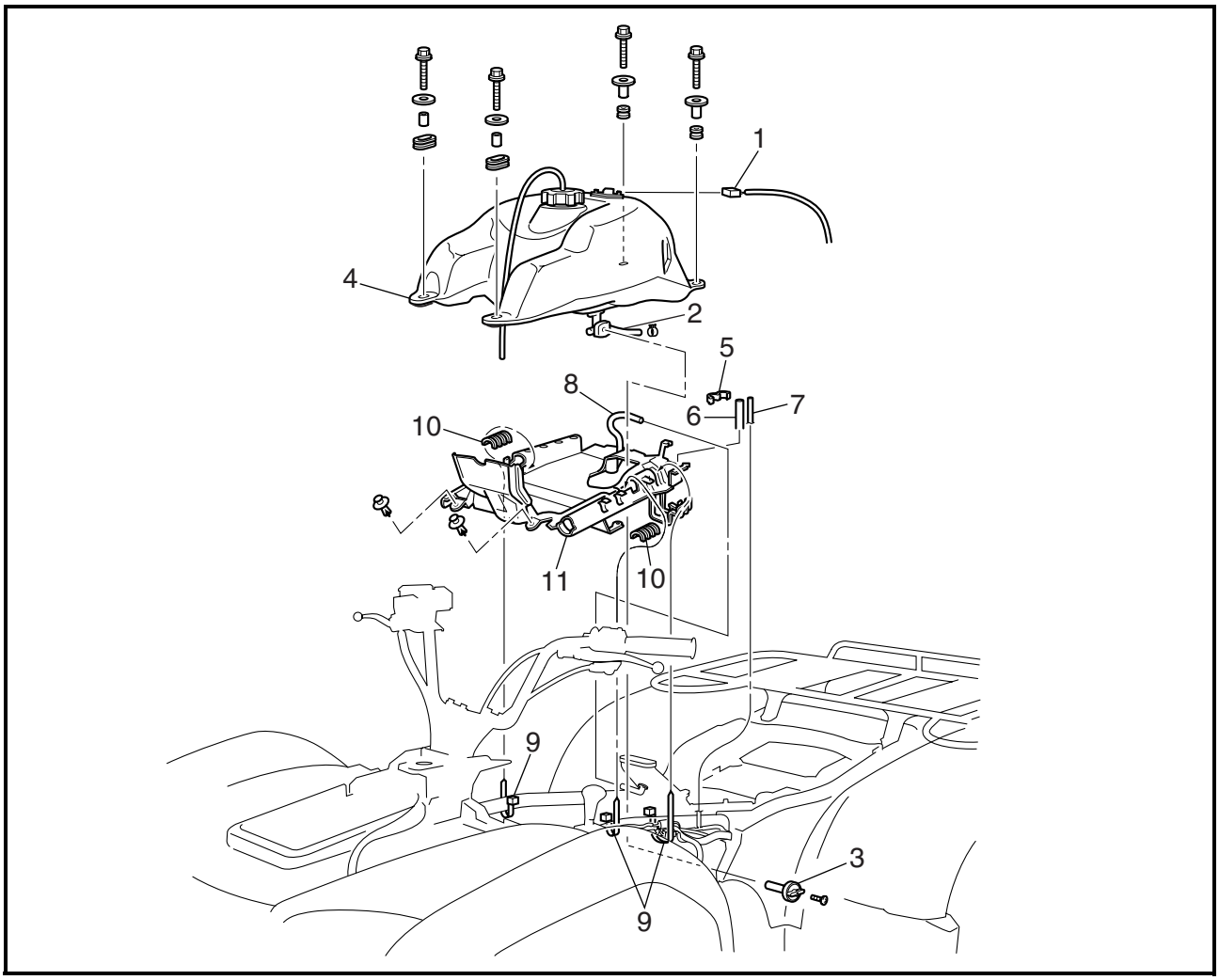

Order	Job name/Part name	Q'ty	Remarks
	Removing the fuel tank		Remove the parts in the order below.
	Seat and side panels		Refer to "SEAT AND SIDE PANELS".
	Fuel tank cover		Refer to "HANDLEBAR COVER, FUEL TANK COVER AND FRONT FENDER".
1	Fuel sender coupler	1	Disconnect.
2	Fuel hose	1	**NOTE:** Before disconnecting the fuel hose, turn the fuel cock to "OFF".
3	Fuel cock lever	1	
4	Fuel tank	1	**NOTE:** When installing the fuel tank, pass the fuel tank breather hose through the hole in the handlebar protector.

Downloaded from www.Manualslib.com manuals search engine

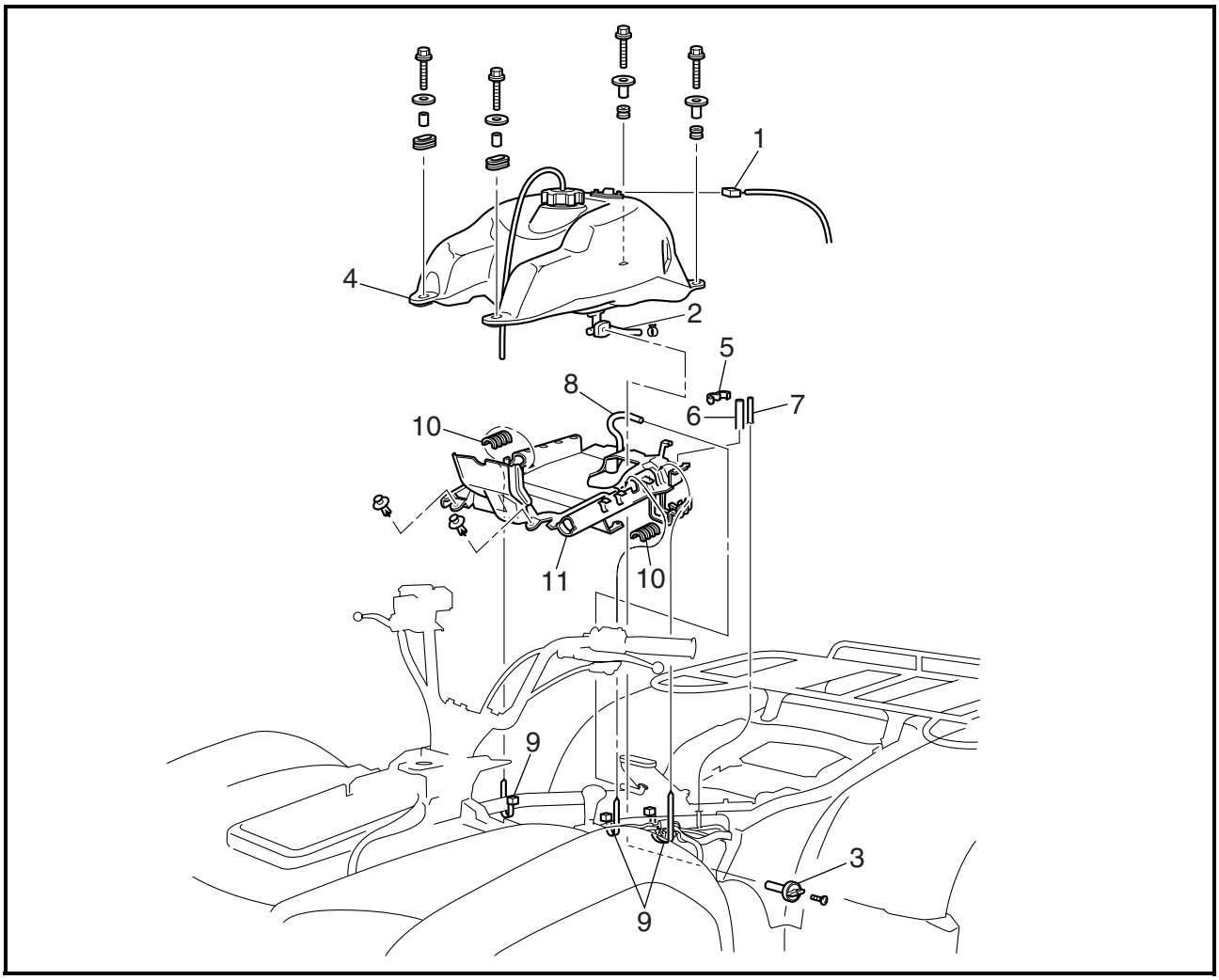

Order	Job name/Part name	Q'ty	Remarks
5	Clamp	1	
6	Vacuum chamber breather hose	1	
7	Differential gear case breather hose	1	
8	Crankcase breather hose	1	
9	Plastic band	3	
10	Bushing	2	
11	Plastic cover	1	
			For installation, reverse the removal procedure.

Downloaded from www.Manualslib.com manuals search engine

FOOTREST BOARDS

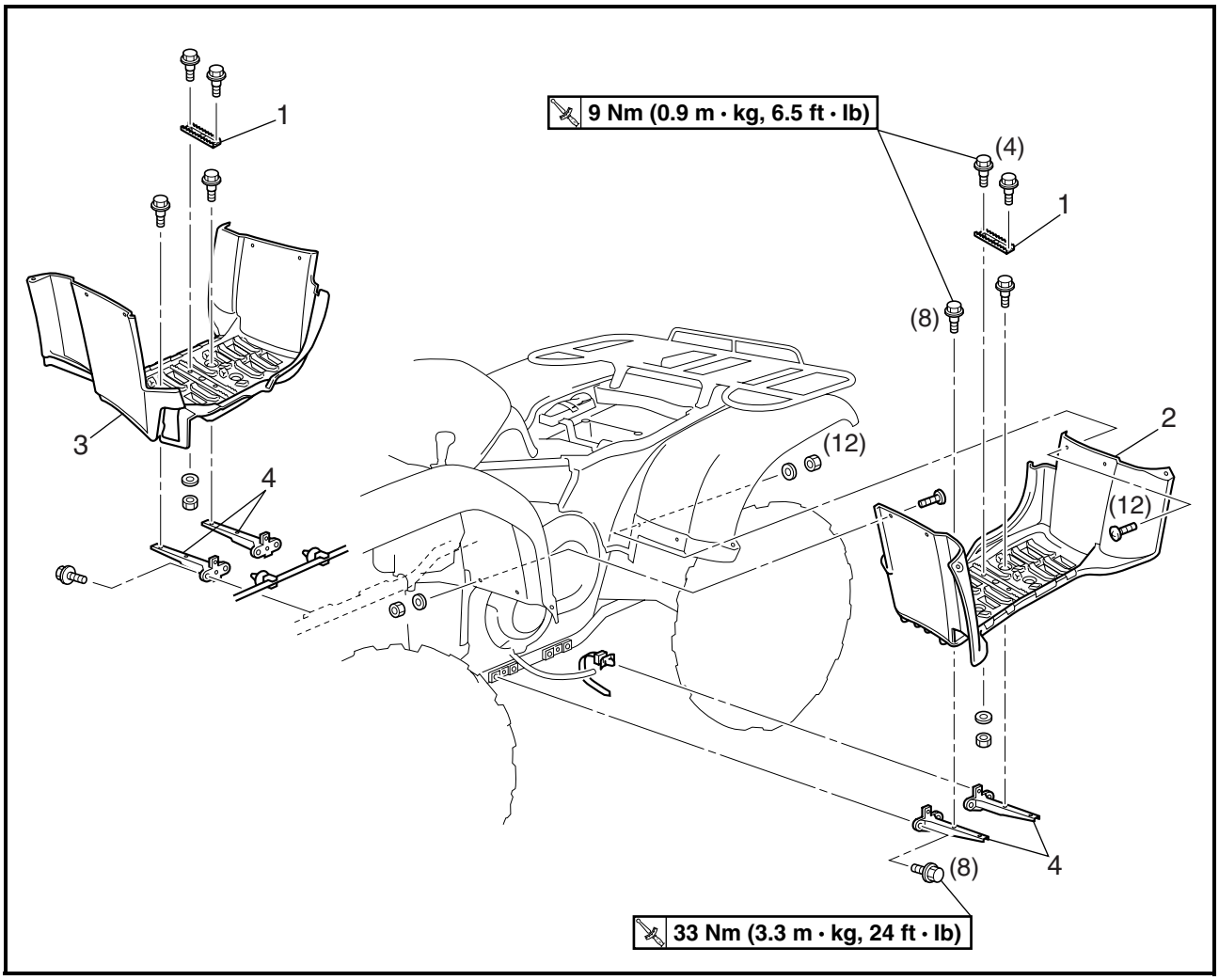

Order	Job name/Part name	Q'ty	Remarks
	Removing the footrest boards		Remove the parts in the order below.
	Fuel tank side panels		Refer to "SEAT AND SIDE PANELS".
1	Footrest	2	
2	Left footrest board	1	
3	Right footrest board	1	
4	Footrest bracket	4	
			For installation, reverse the removal procedure.

Downloaded from www.Manualslib.com manuals search engine

ENGINE

ADJUSTING THE VALVE CLEARANCE

NOTE:
- The valve clearance must be adjusted when the engine is cool to the touch.
- Adjust the valve clearance when the piston is at the Top Dead Center (T.D.C.) on the compression stroke.

1.Remove:
- Seat
- Front carrier
- Front fender
- Fuel tank
- Engine side cover

Refer to “SEAT, CARRIERS, FENDERS AND FUEL TANK”.

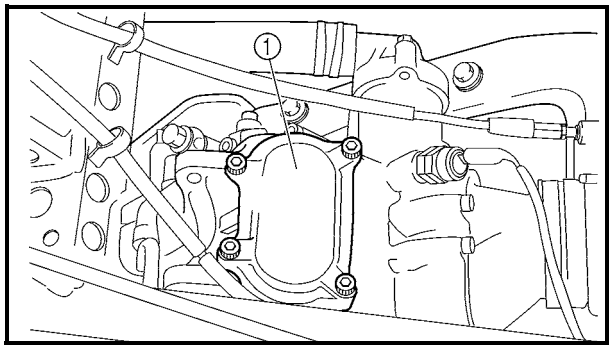

2.Remove:
- Tappet cover (intake) ①
- Tappet covers (exhaust) ②

3.Disconnect:
- Spark plug cap ③

4.Remove:
- Spark plug

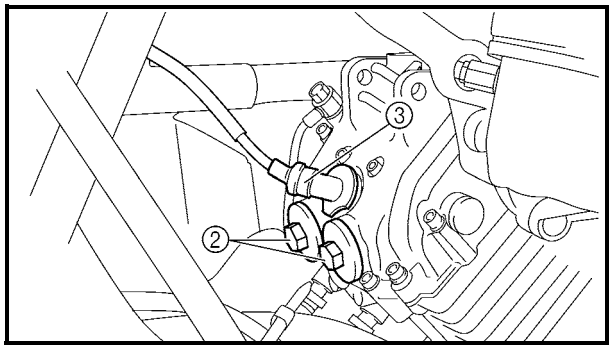

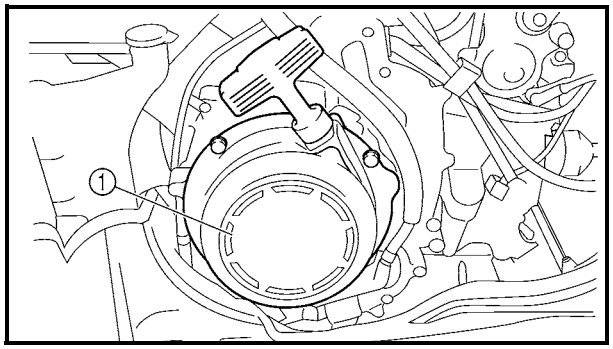

5.Remove:
- Recoil starter ①

Downloaded from www.Manualslib.com manuals search engine

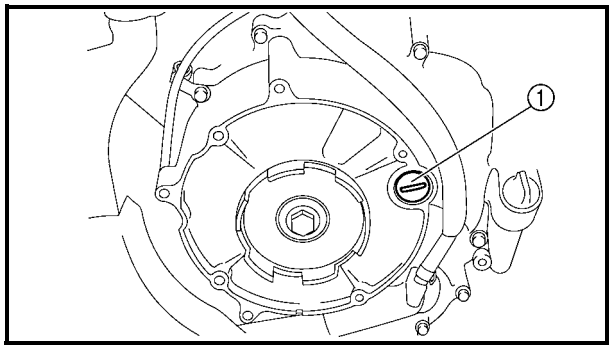

6.Remove:
- Timing plug ①

7.Check:
- Valve clearance
  Out of specification → Adjust.

Valve clearance (cold):
Intake:
0.10 ~ 0.15 mm
(0.0039 ~ 0.0059 in)
Exhaust:
0.15 ~ 0.20 mm
(0.0059 ~ 0.0079 in)

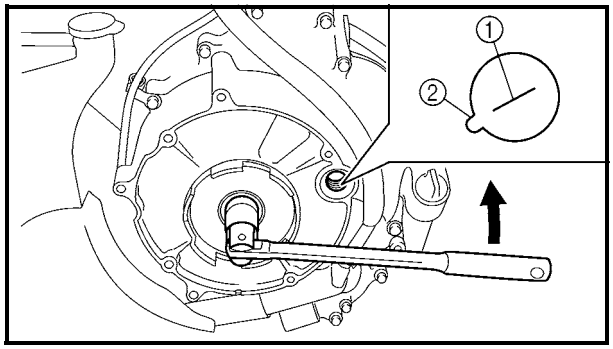

****

Checking steps:
- Turn the crankshaft counterclockwise with a wrench.
- Align the "I" mark ① on the rotor with the stationary pointer ② on the crankcase cover. When the "I" mark is aligned with the stationary pointer, the piston is at the Top Dead Center (T.D.C.).

NOTE:
- When the piston is at the Top Dead Center (T.D.C.) on the compression stroke, there should be clearance between the valve stem tips and their respective rocker arm adjusting screws.
- If there is no clearance, rotate the crankshaft counterclockwise one turn.

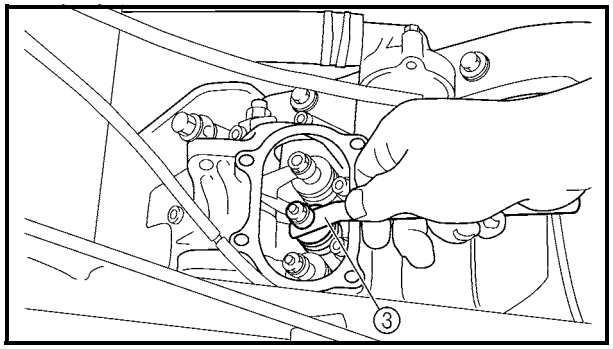

- Measure the valve clearance using a feeler gauge ③.

****

Downloaded from www.Manualslib.com manuals search engine

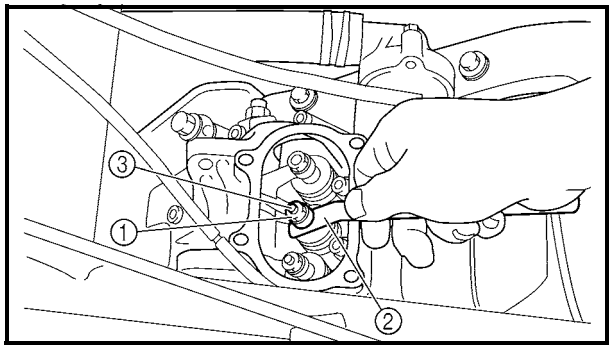

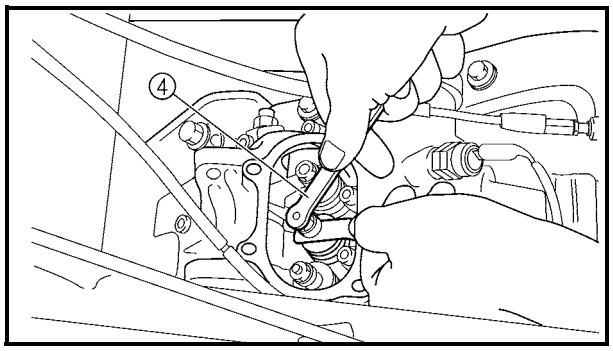

8.Adjust:
- Valve clearance

****

Adjustment steps:
- Loosen the locknut ①.
- Insert a feeler gauge ② between the adjuster end and the valve end.
- Turn the adjuster ③ clockwise or counter-clockwise with the tappet adjusting tool ④ until the proper clearance is obtained.

	Tappet adjusting tool: **P/N. YM-08035, 90890-01311**

- Hold the adjuster to prevent it from moving and then tighten the locknut.

	Locknut: **14 Nm (1.4 m • kg, 10 ft • lb)**

- Measure the valve clearance.
- If the clearance is incorrect, repeat the above steps until the proper clearance is obtained.

****

9.Install:
- All removed parts

NOTE:
Install all removed parts in the reverse order of their disassembly. Note the following points.

10.Install:
- Recoil starter ¬ LT
  14 Nm (1.4 m • kg, 10.1 ft • lb)
- Spark plug **18 Nm (1.8 m • kg, 13 ft • lb)**
- Tappet covers (exhaust)
  12 Nm (1.2 m • kg, 8.7 ft • lb)
- Tappet cover (intake)
  10 Nm (1.0 m • kg, 7.2 ft • lb)

Downloaded from www.Manualslib.com manuals search engine

11.Install:
- Engine side cover
- Fuel tank
- Front fender
- Front carrier
- Seat

  Refer to “SEAT, CARRIERS, FENDERS AND FUEL TANK”.

ADJUSTING THE TIMING CHAIN

Adjustment free.

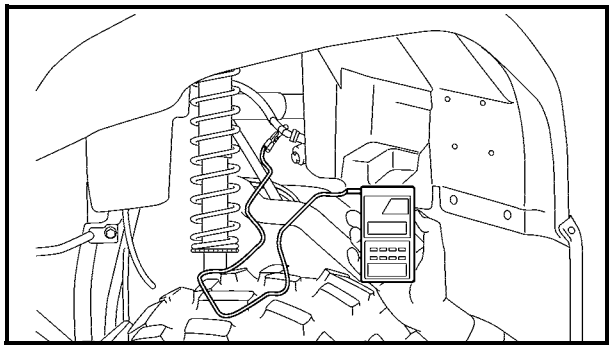

ADJUSTING THE IDLING SPEED

1.Start the engine and let it warm up for several minutes.

2.Remove:
- Seat
- Fuel tank side panels

  Refer to “SEAT, CARRIERS, FENDERS AND FUEL TANK”.

3.Attach:
- Tachometer

  (to the spark plug lead)

Inductive tachometer:
P/N. YU-8036-A
Engine tachometer:
P/N. 90890-03113

4.Check:
- Engine idling speed

  Out of specification → Adjust.

Engine idling speed:
1,450 ~ 1,550 r/min

Downloaded from www.Manualslib.com manuals search engine

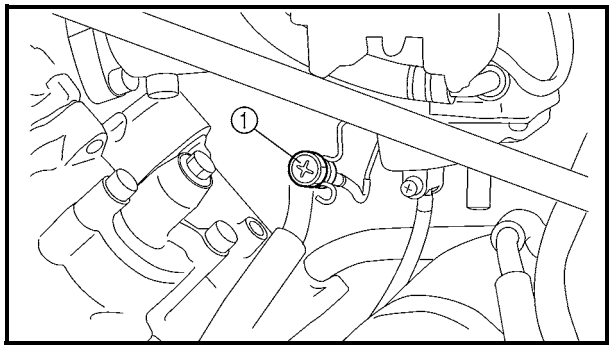

5.Adjust:
- Engine idling speed

****

Adjustment steps:

- Turn the throttle stop screw ① in or out until the specified idling speed is obtained.

Turning in	**Idling speed becomes higher.**
Turning out	**Idling speed becomes lower.**

****

6.Detach:
- Tachometer

7.Adjust:
- Throttle lever free play
  Refer to "ADJUSTING THE THROTTLE LEVER FREE PLAY".

	Throttle lever free play: **3 ~ 5 mm (0.12 ~ 0.20 in)**

8.Install:
- Fuel tank side panels
- Seat
  Refer to "SEAT, CARRIERS, FENDERS AND FUEL TANK".

ADJUSTING THE THROTTLE LEVER FREE PLAY

NOTE:
Engine idling speed should be adjusted properly before adjusting the throttle lever free play.

Downloaded from www.Manualslib.com manuals search engine

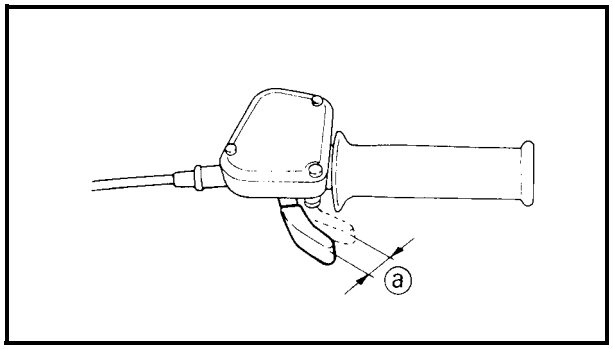

1.Check:
- Throttle lever free play ⓐ
  Out of specification → Adjust.

	Throttle lever free play: **3 ~ 5 mm (0.12 ~ 0.20 in)**

2.Remove:
- Seat
- Fuel tank side panel (right)
  Refer to "SEAT, CARRIERS, FENDERS AND FUEL TANK".

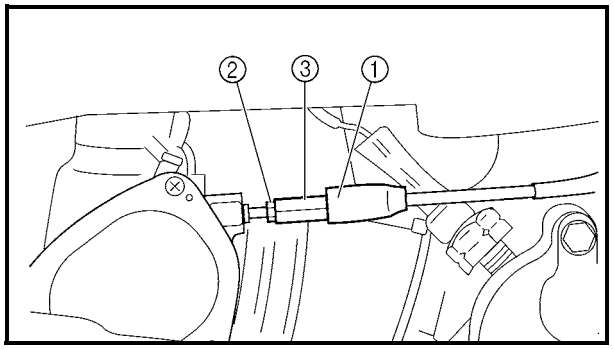

3.Adjust:
- Throttle lever free play

****

Adjustment steps:
First step:
- Pull back the adjuster cover ①.
- Loosen the locknut ② on the carburetor side.
- Turn the adjuster ③ in or out until the correct free play is obtained.

Turning in	**Free play is increased.**
Turning out	**Free play is decreased.**

- Tighten the locknut ②.
- Push in the adjuster cover ①.

NOTE:
If the free play cannot be adjusted here, adjust it at the throttle lever side of the cable.

Downloaded from www.Manualslib.com manuals search engine

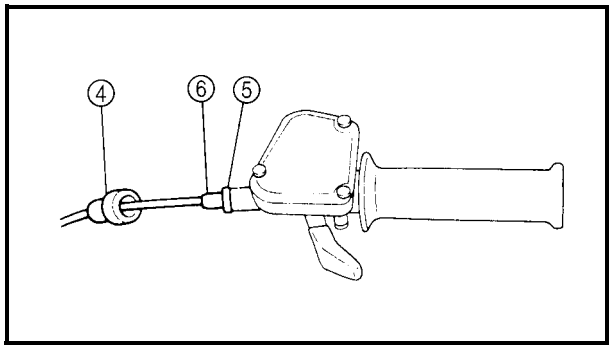

Second step:
- Pull back the adjuster cover ④.
- Loosen the locknut ⑤.
- Turn the adjuster ⑥ in or out until the correct free play is obtained.

Turning in	**Free play is increased.**
Turning out	**Free play is decreased.**

- Tighten the locknut ⑤.
- Push in the adjuster cover ④.

⚠ WARNING

After adjusting the free play, turn the handlebar to the right and left to make sure that the engine idling speed does not increase.

****

4.Install:
- Fuel tank side panel (right)
- Seat
  Refer to “SEAT, CARRIERS, FENDERS AND FUEL TANK”.

ADJUSTING THE SPEED LIMITER

The speed limiter keeps the carburetor throttle from becoming fully-opened even when the throttle lever is applied to the maximum position. Screwing in the adjuster stops the engine speed from increasing.

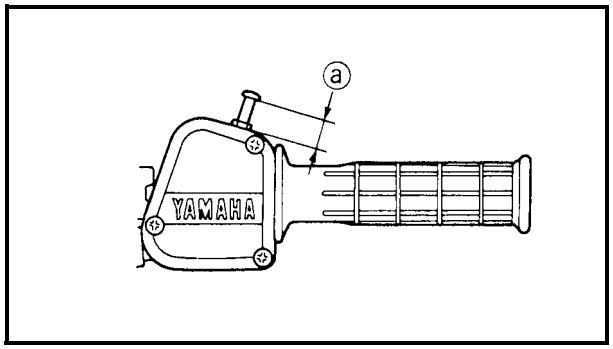

1.Check:
- Speed limiter length ⓐ
  Out of specification → Adjust.

	Speed limiter length: **12 mm (0.47 in)**

Downloaded from www.Manualslib.com manuals search engine

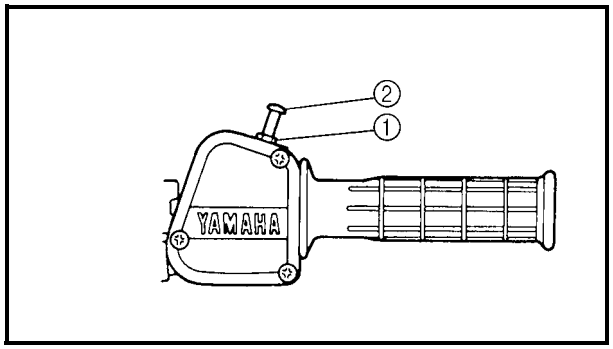

2.Adjust:
- Speed limiter length

****

Adjustment steps:
- Loosen the locknut ①.
- Turn the adjuster ② in or out until the specified speed limiter length is obtained.

Turning in	**Speed limiter length is decreased.**
Turning out	**Speed limiter length is increased.**

- Tighten the locknut.

⚠ WARNING

- **Particularly for a beginner rider, the speed limiter should be screwed in completely. Screw it out little by little as their riding technique improves. Never remove the speed limiter for a beginning rider.**
- **For proper throttle lever operation do not turn out the adjuster more than 12 mm (0.47 in). Also, always adjust the throttle lever free play to 3 ~ 5 mm (0.12 ~ 0.20 in).**

****

Downloaded from www.Manualslib.com manuals search engine

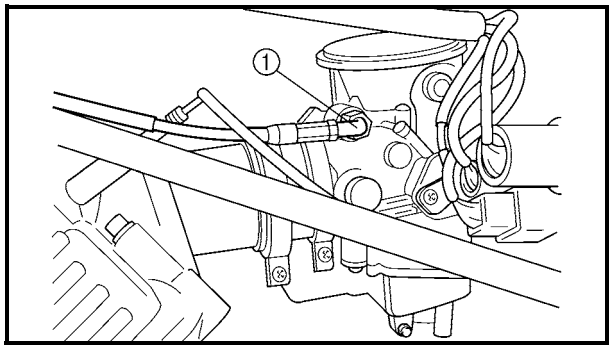

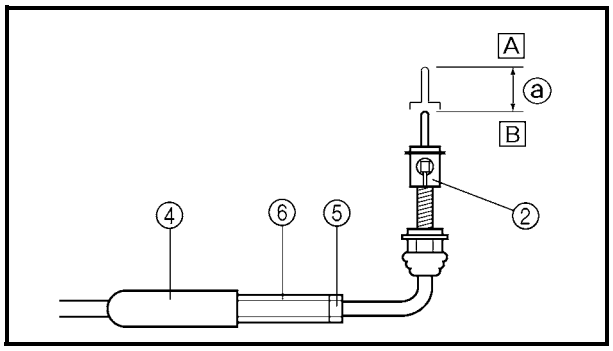

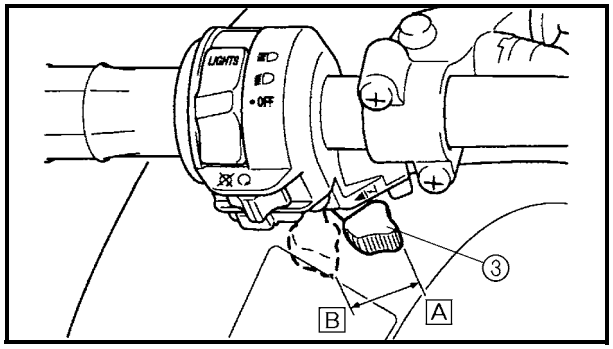

ADJUSTING THE STARTER CABLE

1.Remove:
- Seat
- Fuel tank side panel (left)

2.Adjust:

****

Adjustment steps:

- Disconnect the starter cable ① from the carburetor body.

NOTE:

Do not remove the starter plunger ② from the starter cable.

- Measure the starter plunger stroke distance ⓐ of the starter lever ③ fully close to fully open position. If the distance is out of specification adjust it as described below.

	Starter plunger stroke distance: 15 mm (0.59 in)

A Fully closed position
B Fully open position

- Pull back the boot ④.
- Loosen the locknut ⑤.
- Turn the adjuster ⑥ in or out until the correct distance is obtained.

Turning in	**Distance increased.**
Turning out	**Distance decreased.**

- Tighten the locknut ⑤.
- Push in the boot ④.
- Connect the starter cable to the carburetor.

⚠ WARNING

After adjusting the cable, turn the handlebar to right and left, and make sure that the engine idling speed dose not increase.

****

3.Install:
- Fuel tank side panel (left)
- Seat

Downloaded from www.Manualslib.com manuals search engine

CHECKING THE SPARK PLUG

1.Remove:
- Spark plug

2.Check:
- Spark plug type
  Incorrect → Replace.

Standard spark plug:
DPR8EA-9/NGK

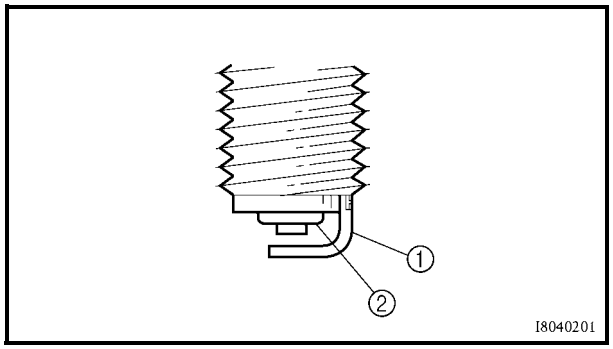

3.Check:
- Electrode ①
  Wear/damage → Replace.
- Insulator ②
  Abnormal color → Replace.
  Normal color is a medium-to-light tan color.

4.Clean the spark plug with a spark plug cleaner or wire brush.

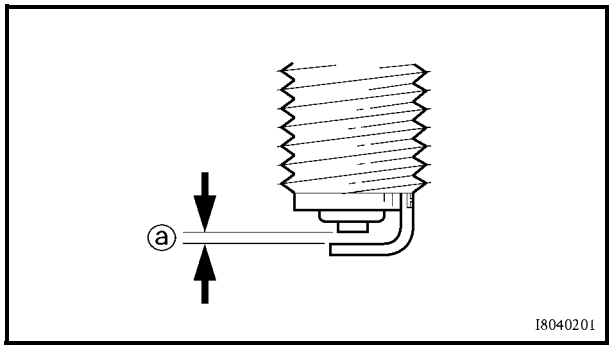

5.Measure:
- Plug gap ⓐ
  Use a wire gauge or feeler gauge.
  Out of specification → Regap.

Spark plug gap:
0.8 ~ 0.9 mm (0.031 ~ 0.035 in)

6.Install:
- Spark plug — **18 Nm (1.8 m • kg, 13 ft • lb)**

NOTE:
Before installing a spark plug, clean the gasket surface and plug surface.

Downloaded from www.Manualslib.com manuals search engine

CHECKING THE IGNITION TIMING

NOTE:
Engine idling speed and throttle cable free play should be adjusted properly before checking the ignition timing.

1.Remove:
- Seat
- Fuel tank side panel (left)
- Engine side cover
  Refer to "SEAT, CARRIERS, FENDERS AND FUEL TANK".

2.Attach:
- Tachometer
- Timing light
  (to the spark plug lead)

Inductive tachometer:
P/N. YU-8036-A
Engine tachometer:
P/N. 90890-03113
Timing light:
P/N. YM-33277-A, 90890-03141

3.Check:
- Ignition timing

****

Checking steps:
- Warm up the engine and keep it at the specified speed.

Engine speed:
1,450 ~ 1,550 r/min

- Remove the recoil starter ①.
- Remove the timing plug ②.
- Visually check the stationary pointer ③ to verify it is within the required firing range ④ indicated on the flywheel.
  Incorrect firing range → Check the pulser coil assembly.
- Install the timing plug.
- Install the recoil starter.

Recoil starter bolt:
14 Nm (1.4 m • kg, 10.1 ft • lb)
LOCTITE®

****

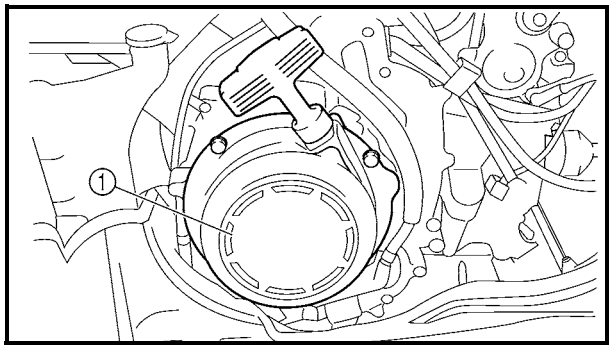

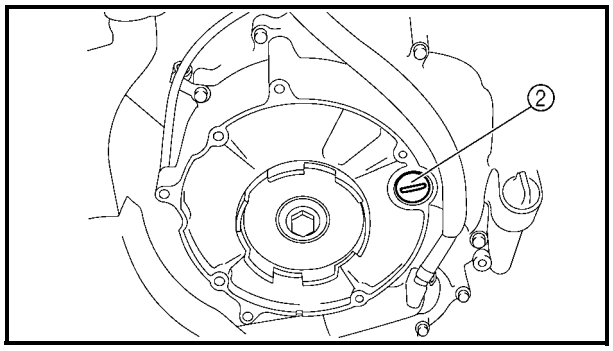

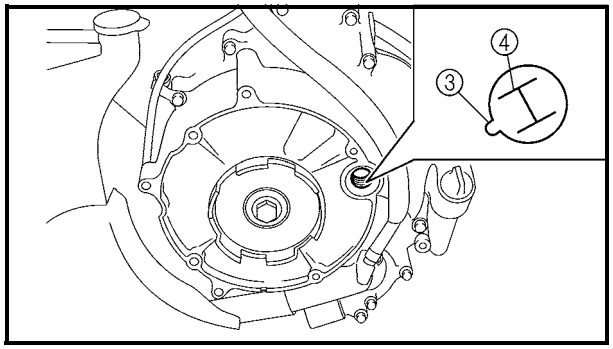

Downloaded from www.Manualslib.com manuals search engine

4.Detach:
- Timing light
- Tachometer

5.Install:
- Engine side cover
- Fuel tank side panel (left)
- Seat
  Refer to “SEAT, CARRIERS, FENDERS AND FUEL TANK”.

MEASURING THE COMPRESSION PRESSURE

NOTE:
Insufficient compression pressure will result in a loss of performance.

1.Check:
- Valve clearance
  Out of specification → Adjust.
  Refer to “ADJUSTING THE VALVE CLEARANCE”.

2.Start the engine and let it warm up for several minutes.
3.Stop the engine.
4.Remove:
- Spark plug

5.Attach:
- Adapter
- Compression gauge ①

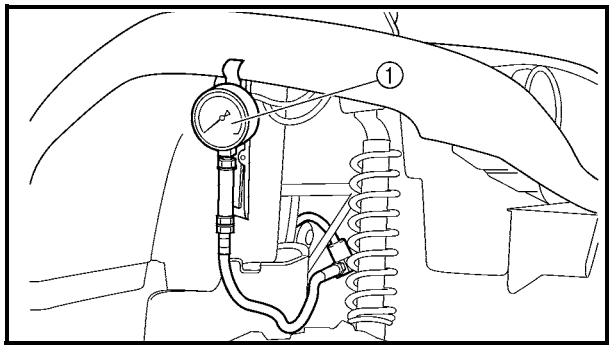

Compression gauge:
P/N. YU-33223, 90890-03081
Adapter:
P/N. YU-33223-3, 90890-04082

Downloaded from www.Manualslib.com manuals search engine

6.Measure:
- Compression pressure
  Above the maximum pressure:
  Inspect the cylinder head, valve surfaces, and piston crown for carbon deposits.
  Below the minimum pressure:
  Squirt a few drops of oil into the affected cylinder and measure again.
  Refer to the table below.

Compression pressure (with oil introduced into cylinder)	
Reading	**Diagnosis**
Higher than without oil	**Worn or damaged pistons**
Same as without oil	**Defective ring(s), valves, cylinder head gasket or piston is possible.**

Compression pressure (at sea level):
Standard:
1,324 kPa
(13.24 kg/cm^2, 188.31 psi)
Minimum:
1,150 kPa
(11.5 kg/cm^2, 163.57 psi)
Maximum:
1,480 kPa
(14.8 kg/cm^2, 210.50 psi)

****

Measurement steps:
- Crank over the engine with the electric starter (be sure the battery is fully charged) with the throttle wide-open until the compression reading on the gauge stabilizes.

WARNING
When cranking the engine, ground the spark plug lead to prevent sparking.

****

7.Install:
- Spark plug **18 Nm (1.8 m • kg, 13 ft • lb)**

Downloaded from www.Manualslib.com manuals search engine

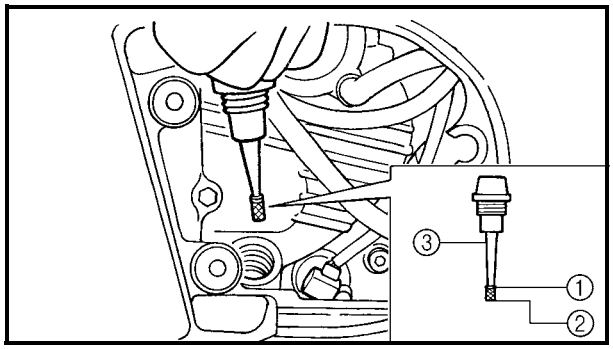

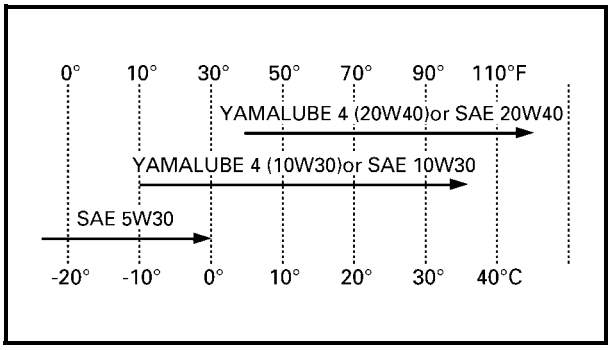

CHECKING THE ENGINE OIL LEVEL

1.Place the machine on a level surface.
2.Remove:
- Engine side panel
  Refer to “SEAT, CARRIERS, FENDERS AND FUEL TANK”.

3.Check:
- Engine oil level
  Oil level should be between the maximum ① and minimum ② marks.
  Oil level low → Add oil to the proper level.

NOTE:
Do not screw the dipstick ③ in when checking the oil level.

Recommended oil:
Follow the left chart.

NOTE:
Recommended oil classification:
API Service “SE”, “SF” type or equivalent (e.g. “SF–SE–CC”, “SF–SE–SD” etc.)

CAUTION:
Do not allow foreign material to enter the crankcase.

4.Start the engine and let it warm up for several minutes.
5.Stop the engine and check the oil level again.

NOTE:
Wait a few minutes until the oil settles before inspecting the oil level.

WARNING
Never remove the dipstick just after high speed operation because the heated oil could spurt out. Wait until the oil cools down before removing the dipstick.

6.Install:
- Engine side panel

Downloaded from www.Manualslib.com manuals search engine

CHANGING THE ENGINE OIL

1. Start the engine and let it warm up for several minutes.
2. Stop the engine and place an oil pan under the engine.
3. Remove:
- Seat
- Fuel tank side panel (left)
- Engine side cover

  Refer to "SEAT, CARRIERS, FENDERS AND FUEL TANK".
4. Remove:
- Engine oil filler plug (dipstick) ①
- Engine oil drain bolt ②

  Drain the engine oil from the crank case.

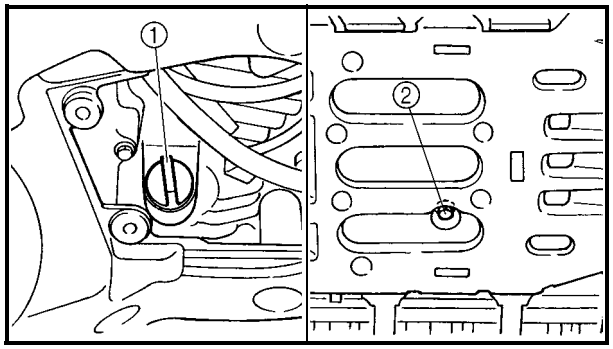

5. If the oil filter cartridge is also to be replaced, perform the following procedure.

****

Replacement steps:

- Remove the oil filter cartridge ① with an oil filter wrench ②.

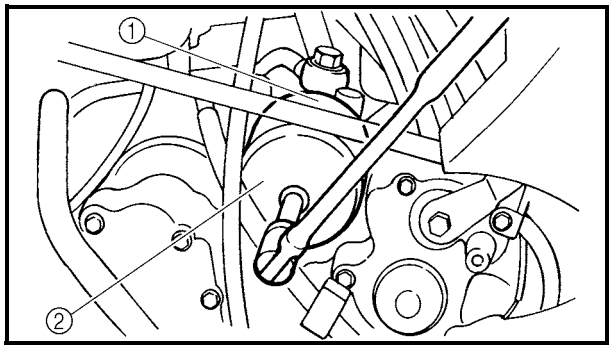

	Oil filter wrench: **P/N. YU-38411, 90890-01426**

- Lubricate the O-ring ③ of the new oil filter cartridge with a thin coat of engine oil.

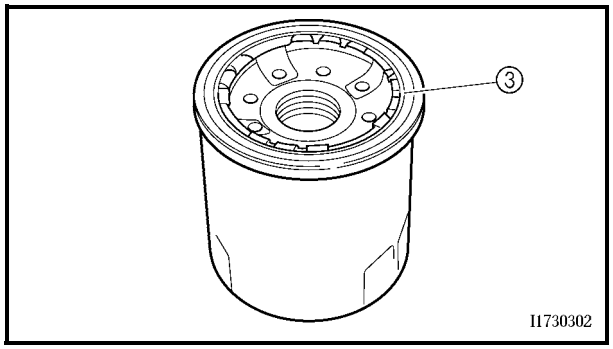

CAUTION:

Make sure that the O-ring ③ is positioned correctly in the groove of the oil filter cartridge.

- Tighten the new oil filter cartridge to specification with an oil filter wrench.

	Oil filter cartridge: **17 Nm (1.7 m • kg, 12 ft • lb)**

****

Downloaded from www.Manualslib.com manuals search engine

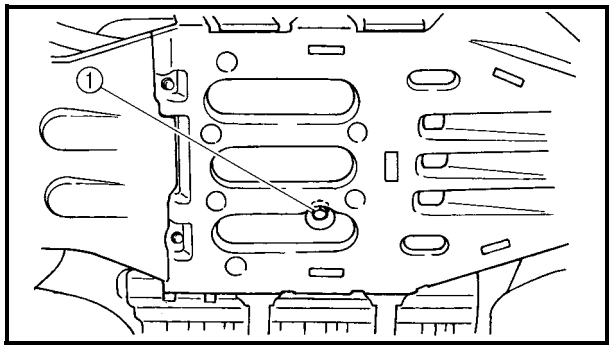

6.Install:
- Engine oil drain bolt ①

30 Nm (3.0 m • kg, 22 ft • lb)

7.Fill:
- Crankcase
  (with sufficient oil to reach the specified level)
  Refer to "CHECKING THE ENGINE OIL LEVEL".

Oil quantity:
Periodic oil change:
1.9 L (1.7 Imp qt, 2.0 US qt)
With oil filter replacement:
2.0 L (1.8 Imp qt, 2.1 US qt)
Total amount:
2.2 L (1.9 Imp qt, 2.3 US qt)

8.Install:
- Engine oil filler plug

9.Warm up the engine for a few minutes, then stop the engine.

10.Check:
- Engine
  (for engine oil leaks)
- Oil level
  Refer to "CHECKING THE ENGINE OIL LEVEL".

11.Check:
- Engine oil pressure

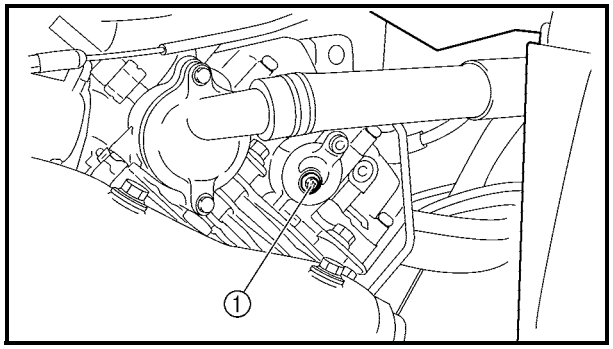

****

- Slightly loosen the oil gallery bolt ①.
- Start the engine and keep it idling until engine oil starts to seep from the oil gallery bolt. If no engine oil comes out after one minute, turn the engine off so that it will not seize.
- Check the engine oil passages, the oil filter cartridge and the oil pump for damage or leakage. Refer to "CRANKSHAFT AND OIL PUMP" in CHAPTER 4.

Downloaded from www.Manualslib.com manuals search engine

- Start the engine after solving the problem(-s) and check the engine oil pressure again.
- Tighten the oil gallery bolt to specification.

	Oil gallery bolt: **7 Nm (0.7 m • kg, 5.1 ft • lb)**

****

12.Install:
- Engine side cover
- Fuel tank side panel (left)
- Seat

  Refer to “SEAT, CARRIERS, FENDERS AND FUEL TANK”.

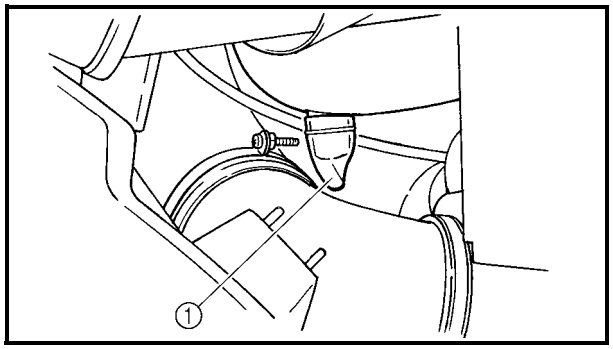

CLEANING THE AIR FILTER

NOTE:

There is a check hose ① at the bottom of the air filter case. If dust and/or water collects in this hose, clean the air filter element and air filter case.

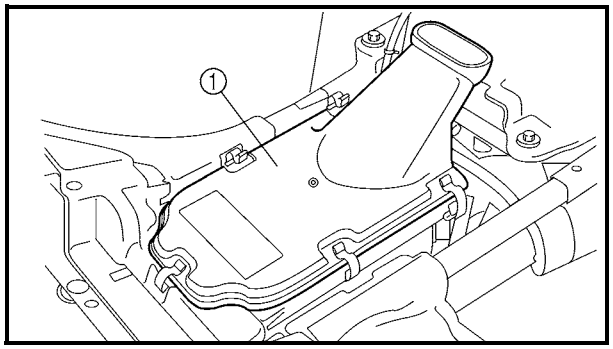

1.Remove:
- Seat
- Fuel tank cover

  Refer to “SEAT, CARRIERS, FENDERS AND FUEL TANK”.

2.Remove:
- Air filter case cover ①

Downloaded from www.Manualslib.com manuals search engine

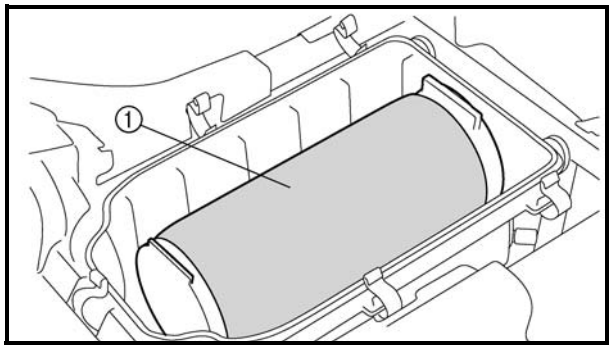

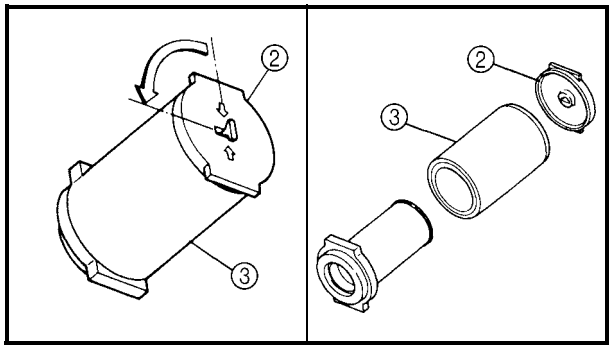

3.Remove:
- Air filter element assembly ①
- Air filter element cap
- Air filter element

NOTE:
When removing the air filter element, rotate the air filter element cap 1/4 of a turn and remove the element.

② Air filter element cap
③ Air filter element

CAUTION:
Never operate the engine with the air filter element removed. This will allow unfiltered air to enter, causing rapid wear and possible engine damage. Additionally, operation without the filter element will affect carburetor tuning with subsequent poor performance and possible engine overheating.

4.Check:
- Air filter element
  Damaged → Replace.

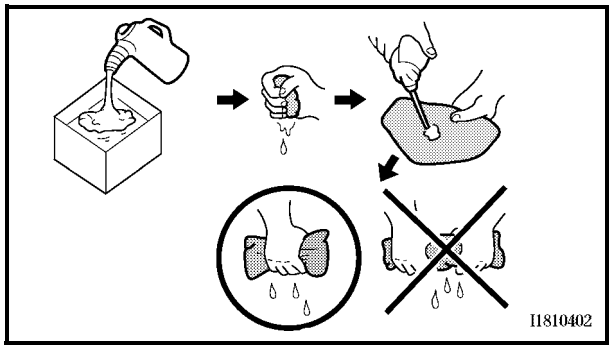

5.Clean:
- Air filter element

****

Cleaning steps:
- Wash the element gently, but thoroughly in solvent.

WARNING
Use a cleaning solvent which is designed to clean parts only. Never use gasoline or low flash point solvents as they may cause a fire or explosion.

Downloaded from www.Manualslib.com manuals search engine

- Squeeze the excess solvent out of the element and let it dry.

CAUTION:

Do not twist or wring out the element. This could damage the foam material.

- Apply engine oil to the element.
- Squeeze out the excess oil.

NOTE:

The element should be wet but not dripping.

****

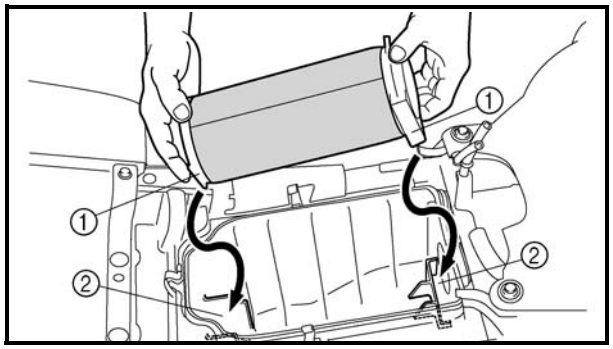

6.Install:
- Air filter element
- Air filter case cover

NOTE:

- Insert the lobes ① on the filter element into the receptacles ② on the filter case.
- To prevent air leaks make sure that the sealing surface of the element matches the sealing surface of the case.

7.Install:
- Fuel tank cover
- Seat

  Refer to “SEAT, CARRIERS, FENDERS AND FUEL TANK”.

CHECKING THE COOLANT LEVEL

1.Place the machine on a level surface.

2.Remove:
- Seat
- Fuel tank side panel (left)

Downloaded from www.Manualslib.com manuals search engine

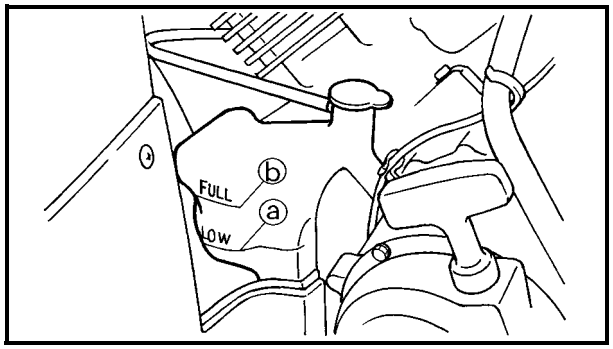

3.Check:
- Coolant level
  The coolant level should be between the minimum level mark ⓐ and maximum level mark ⓑ.
  Below the minimum level mark → Add the recommended coolant to the proper level.

CAUTION:
- **Adding water instead of coolant lowers the antifreeze content of the coolant. If water is used instead of coolant, check and if necessary, correct the antifreeze concentration of the coolant.**
- **Use only distilled water. However, soft water may be used if distilled water is not available.**

4.Start the engine, warm it up for several minutes, and then turn it off.
5.Check:
- Coolant level

NOTE:
Before checking the coolant level, wait a few minutes until the coolant has settled.

6.Install:
- Fuel tank side panel (left)
- Seat
  Refer to “SEAT, CARRIERS, FENDERS AND FUEL TANK”.

CHANGING THE COOLANT
1.Remove:
- Seat
- Fuel tank side panel (left)
- Engine side cover
- Front carrier
- Front fender panel
- Coolant reservoir cover
  Refer to “SEAT, CARPIERS, FENDERS AND FUEL TANK”.
- Left footrest board
  Refer to “FOOTREST BOARDS”.

Downloaded from www.Manualslib.com manuals search engine

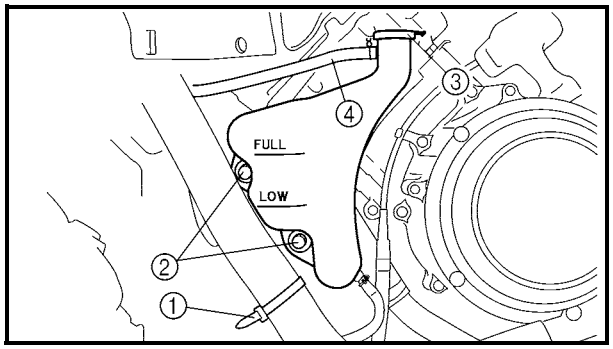

2.Remove:
- Plastic band ①
- Coolant reservoir bolts ②
- Coolant reservoir cap ③

3.Disconnect:
- Coolant reservoir breather hose ④

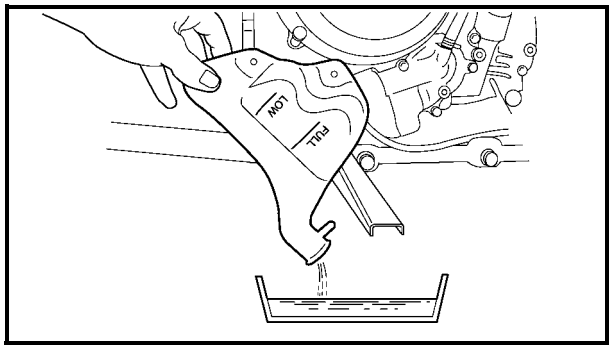

4.Drain:
- Coolant
  (from the coolant reservoir)

5.Connect:
- Coolant reservoir breather hose

6.Install:
- Coolant reservoir bolts
- Plastic band

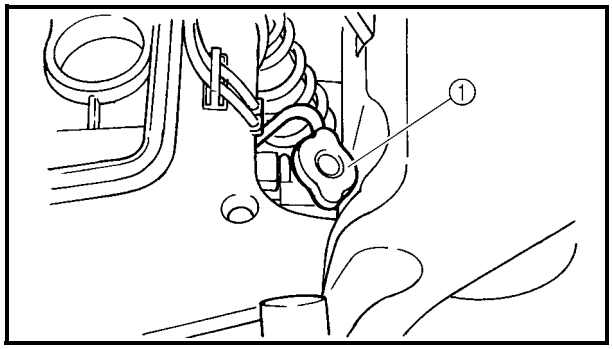

7.Remove:
- Radiator cap ①

⚠ WARNING

A hot radiator is under pressure. Therefore, do not remove the radiator cap when the engine is hot. Scalding hot fluid and steam may be blown out, which could cause serious injury. When the engine has cooled, open the radiator cap as follows:
Place a thick rag or a towel over the radiator cap and slowly turn the radiator cap counterclockwise toward the detent to allow any residual pressure to escape. When the hissing sound has stopped, turn the radiator cap counterclockwise while pressing down on it and then remove it.

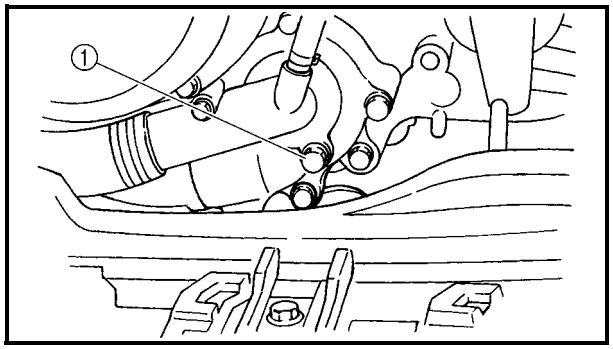

8.Remove:
- Coolant drain bolt (water pump) ①
  (along with the copper washer)

9.Drain:
- Coolant

Downloaded from www.Manualslib.com manuals search engine

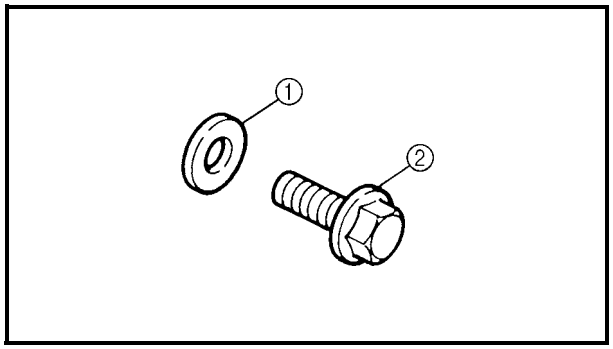

10.Check:
- Copper washer ①
- Coolant drain bolt ②
  Damage → Replace.

11.Install:
- Coolant drain bolt (water pump)

10 Nm (1.0 m • kg, 7.2 ft • lb)

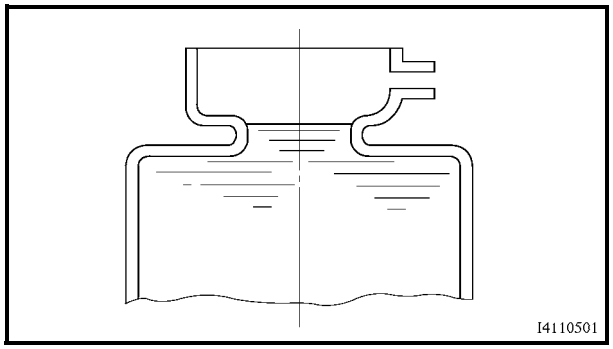

12.Fill:
- Cooling system
  (with the specified amount of the recommended coolant)

Recommended antifreeze
High-quality ethylene glycol antifreeze containing corrosion inhibitors for aluminum engines
Mixing ratio
1 : 1 (antifreeze : water)
Quantity
Total amount
1.8 L
(1.58 Imp qt, 1.90 US qt)
Coolant reservoir capacity
0.3 L
(0.26 Imp qt, 0.32 US qt)

Handling notes for coolant
Coolant is potentially harmful and should be handled with special care.

⚠ WARNING
- **If coolant splashes in your eyes, thoroughly wash them with water and consult a doctor.**
- **If coolant splashes on your clothes, quickly wash it away with water and then with soap and water.**
- **If coolant is swallowed, induce vomiting and get immediate medical attention.**

Downloaded from www.Manualslib.com manuals search engine

CAUTION:

- **Adding water instead of coolant lowers the antifreeze content of the coolant. If water is used instead of coolant, check, and if necessary, correct the antifreeze concentration of the coolant.**
- **Use only distilled water. However, soft water may be used if distilled water is not available.**
- **If coolant comes into contact with painted surfaces, immediately wash them with water.**
- **Do not mix different types of antifreeze.**

13.Install:
- Radiator cap

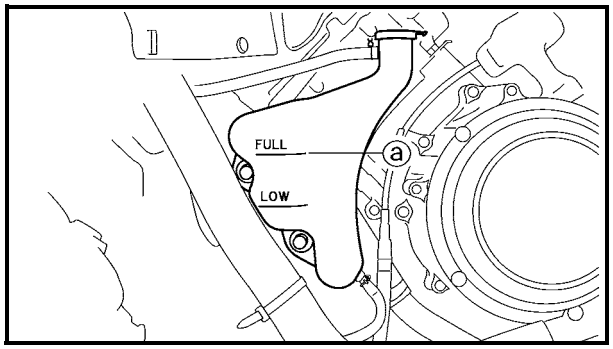

14.Fill:
- Coolant reservoir
  (with the recommended coolant to the maximum level mark ⓐ)

15.Install:
- Coolant reservoir cap

16.Start the engine, warm it up for several minutes, and then turn it off.

17.Check:
- Coolant level
  Refer to “CHECKING THE COOLANT LEVEL”.

NOTE:
Before inspecting the coolant level, wait a few minutes until the coolant has settled.

18.Install:
- Engine skid plate (rear)
- Left footrest board
  Refer to “FOOTREST BOARDS”.
- Coolant reservoir cover
- Front fender panel
- Front carrier
- Engine side cover
- Fuel tank side panel (left)
- Seat
  Refer to “SEAT, CARRIERS, FENDERS AND FUEL TANK”.

Downloaded from www.Manualslib.com manuals search engine

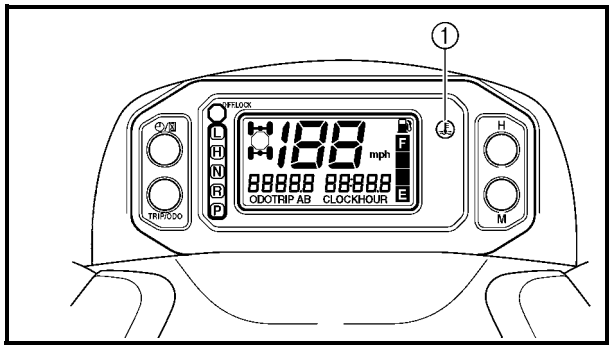

CHECKING THE COOLANT TEMPERATURE WARNING LIGHT

① Coolant temperature indicator light

Coolant temperature warning light checking method

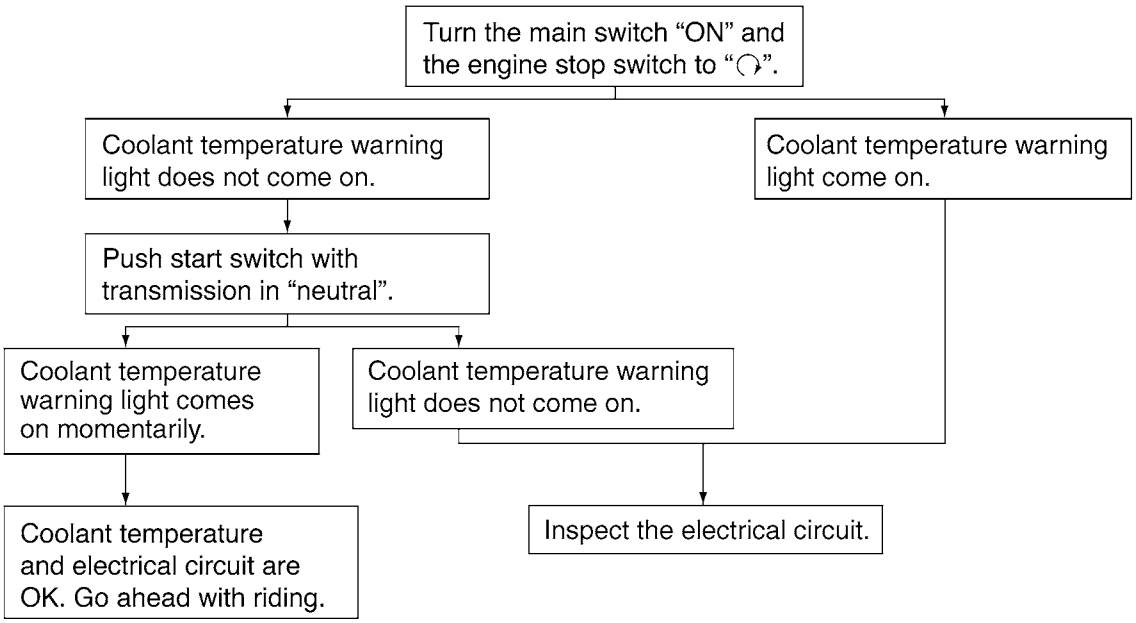

CHECKING THE V-BELT

1.Remove:
- Right footrest board
- Crankcase cover (right)
  Refer to "PRIMARY AND SECONDARY SHEAVES" in CHAPTER 4.

2.Check:
- V-belt ①
  Cracks/wear/scaling/chipping → Replace.
  Oil/grease → Check primary sheave and secondary sheave.

3.Measure:
- V-belt width ②
  Out of specification → Replace.

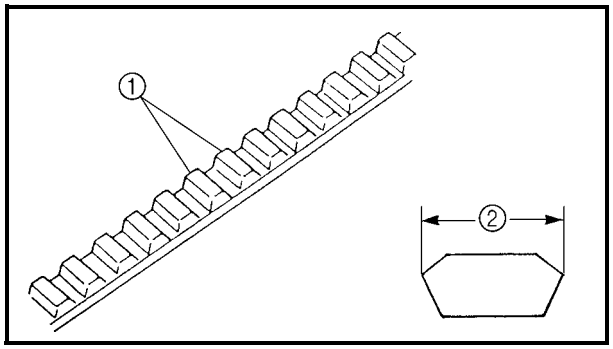

V-belt width:
33.2 mm (1.31 in)
<Limit:> 29.9 mm (1.18 in)

Downloaded from www.Manualslib.com manuals search engine

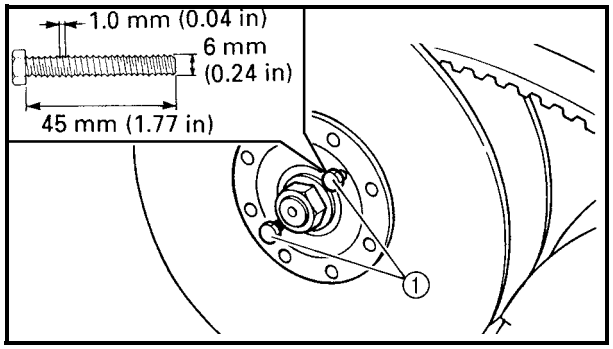

4.Replace:
- V-belt

****

Replacing steps:

- Install the bolts ① (90101-06016) into the secondary fixed sheave hold.

NOTE:
Tightening the bolts ① will push the secondary sliding sheave away, causing the gap between the secondary fixed and sliding sheaves to widen.

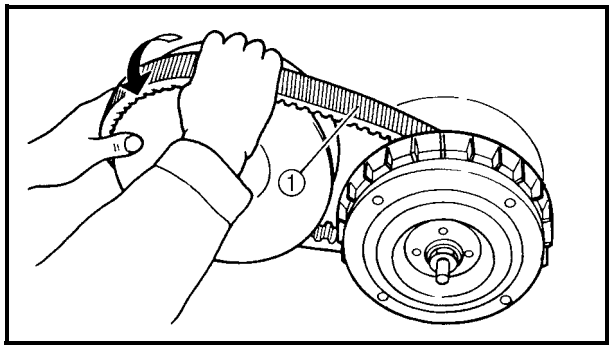

- Remove the V-belt ① from the primary sheave and secondary sheave.

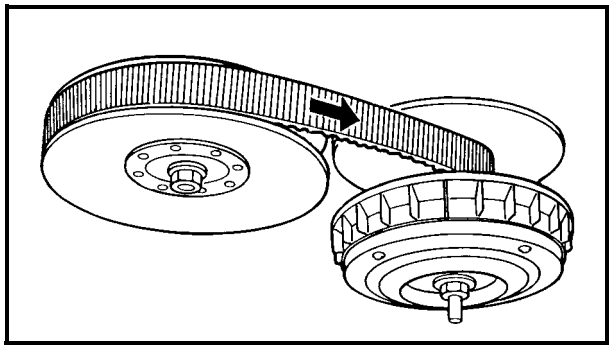

- Install the V-belt.

NOTE:
Install the V-belt so that its arrow faces the direction shown in the illustration.

- Remove the bolts.

****

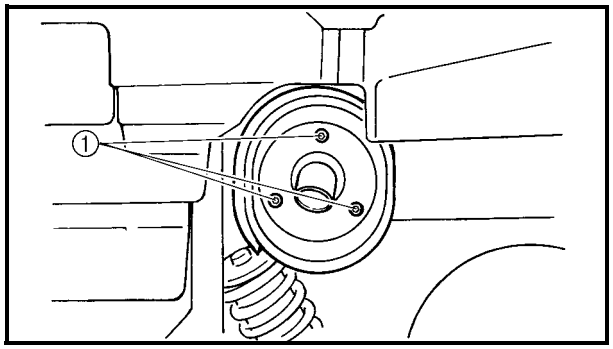

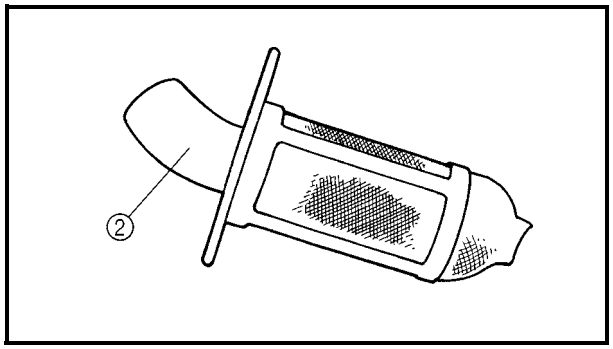

CLEANING THE SPARK ARRESTER

1.Clean:
- Spark arrester

****

Cleaning steps:

⚠ WARNING

- **Select a well-ventilated area free of combustible materials.**
- **Always let the exhaust system cool before performing this operation.**
- **Do not start the engine when removing the tailpipe from the muffler.**

- Remove the bolts ①.
- Remove the tailpipe ② by pulling it out of the muffler.

Downloaded from www.Manualslib.com manuals search engine

- Tap the tailpipe lightly with a soft-face hammer or suitable tool, then use a wire brush to remove any carbon deposits from the spark arrester portion of the tailpipe and the inner contact surfaces of the muffler.
- Insert the tailpipe ② into the muffler and align the bolt holes.
- Insert the bolt ① and tighten it.
- Start the engine and rev it up approximately twenty times while momentarily creating exhaust system back pressure by blocking the end of the muffler with a shop towel.
- Stop the engine and allow the exhaust pipe to cool.

****

Downloaded from www.Manualslib.com manuals search engine

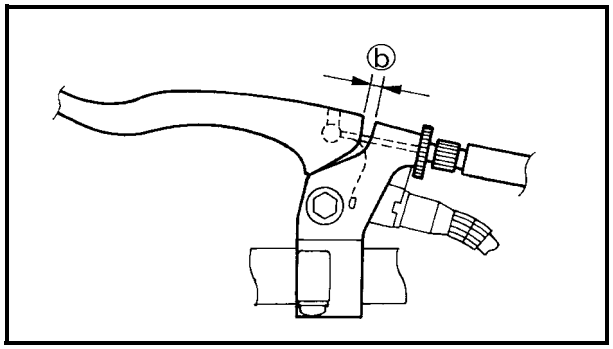

CHASSIS

ADJUSTING THE REAR BRAKE

⚠ WARNING

Always adjust both the brake pedal and the rear brake lever whenever adjusting the rear brake.

1.Check:
- Rear brake lever free play ⓑ
  Out of specification → Adjust.

	Rear brake lever free play: **0.5 ~ 2 mm (0.02 ~ 0.08 in)**

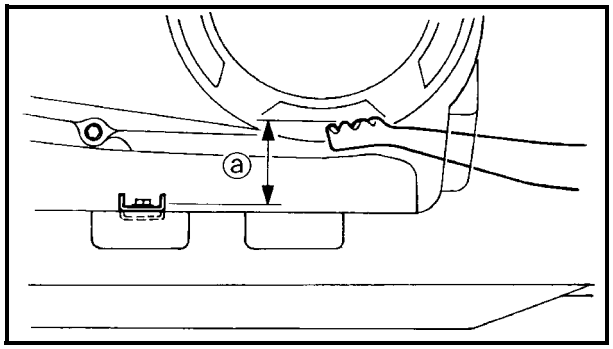

2.Check:
- Rear brake pedal height ⓐ
  Out of specification → Adjust.

	Rear brake pedal height: **45 mm (1.77 in)**

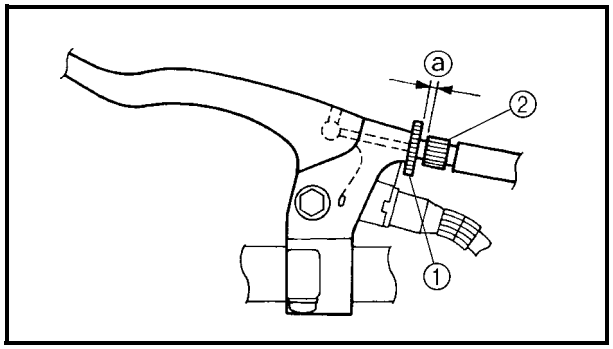

3.Adjust:
- Rear brake lever free play
- Rear brake pedal height

****

Adjustment steps:

- Loosen the locknut (handlebar) ① and fully screw in the brake lever cable adjuster (handlebar) ②.

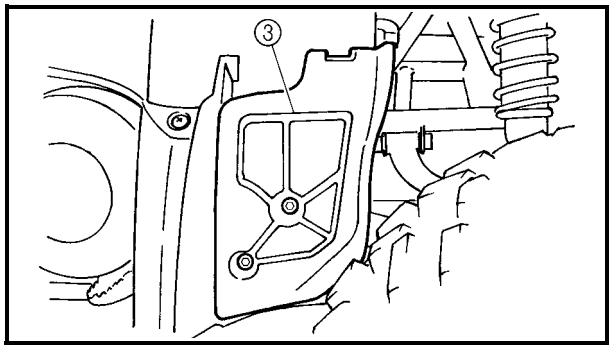

- Remove the rear brake master cylinder cover ③.

Downloaded from www.Manualslib.com manuals search engine

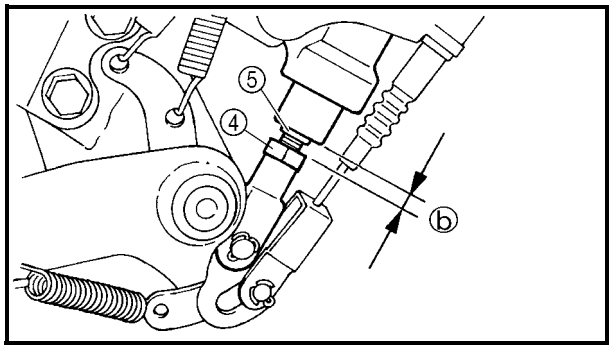

- Loosen the locknut ④.
- Turn the adjusting bolt ⑤ until the brake pedal height is within the specified limits.

Rear brake pedal height:
45 mm (1.77 in)

- Tighten the locknut ④.

NOTE:
When adjusting the brake pedal height make sure the locknut-to-adjusting bolt clearance ⓑ does not exceed 2 mm (0.08 in).

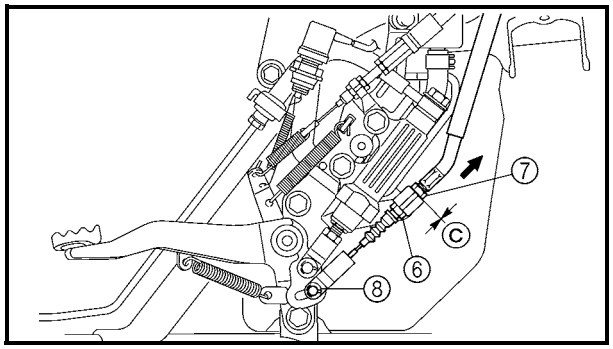

- Loosen the locknut ⑥.
- Pull up the brake outer cable and turn the brake cable adjusting (nut) ⑦ until the clearance ⓒ is within the specified limits.

Clearance ⓒ:
1 mm (0.04 in)

NOTE:
Make sure the pin ⑧ is all the way to the right of the link plate hole.

- Hold the adjusting nut ⑦ and tighten the locknut ⑥.

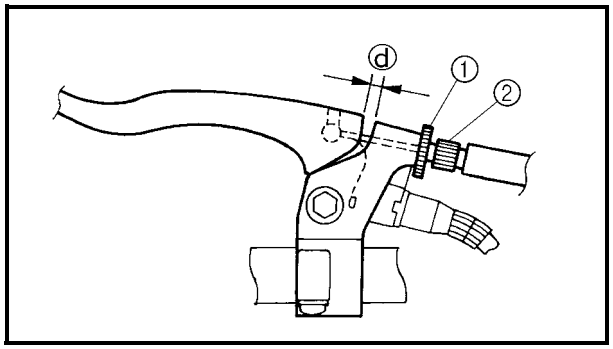

- Turn the brake lever cable adjuster (handlebar) ② until the rear brake lever free play ⓓ is within the specified limits.

Rear brake lever free play:
0.5 ~ 2 mm (0.02 ~ 0.08 in)

- Tighten the locknut (handlebar) ①.

Downloaded from www.Manualslib.com manuals search engine

- Adjust the select lever control cable.
  Refer to “ADJUSTING THE SELECT LEVER CONTROL CABLE AND SHIFT ROD”.
- Install the rear brake master cylinder cover.

WARNING

After this adjustment is performed, lift the front and rear wheels off the ground by placing a block under the engine, and spin the rear wheels to ensure there is no brake drag. If any brake drag is noticed perform the above steps again.

****

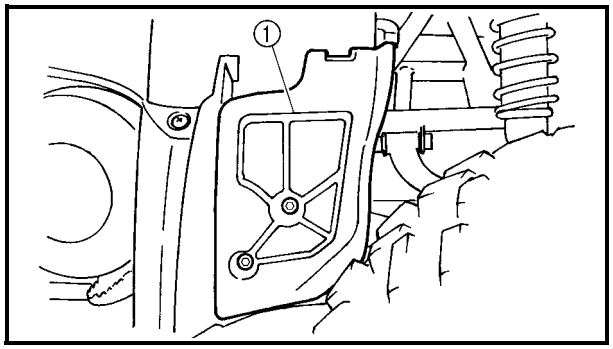

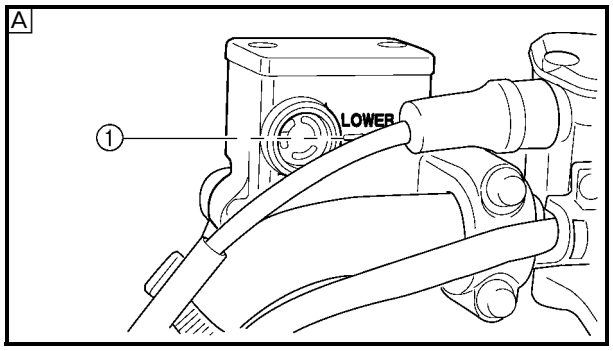

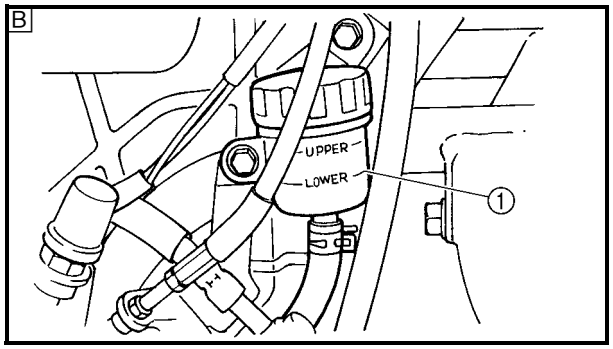

CHECKING THE BRAKE FLUID LEVEL

1.Place the machine on a level surface.

NOTE:

When inspecting the brake fluid level, make sure that the top of the brake fluid reservoir top is horizontal.

2.Remove:
- Rear brake master cylinder cover ①

3.Check:
- Brake fluid level
  Fluid level is under “LOWER” level line ① → Fill up.

Recommended brake fluid:
DOT 4

A Front brake
B Rear brake

CAUTION:

Brake fluid may erode painted surfaces or plastic parts. Always clean up spilled fluid immediately.

Downloaded from www.Manualslib.com manuals search engine

WARNING

- **Use only the designed quality brake fluid: otherwise, the rubber seals may deteriorate, causing leakage and poor brake performance.**
- **Refill with the same type of brake fluid; mixing fluids may result in a harmful chemical reaction and lead to poor performance.**
- **Be careful that water does not enter the master cylinder when refilling. Water will significantly lower the boiling point of the fluid and may result in a vapor lock.**

4. Install: (rear brake)
- Front fender panel
- Front carrier

Refer to “SEAT, CARRIERS, FENDERS AND FUEL TANK”.

Downloaded from www.Manualslib.com manuals search engine

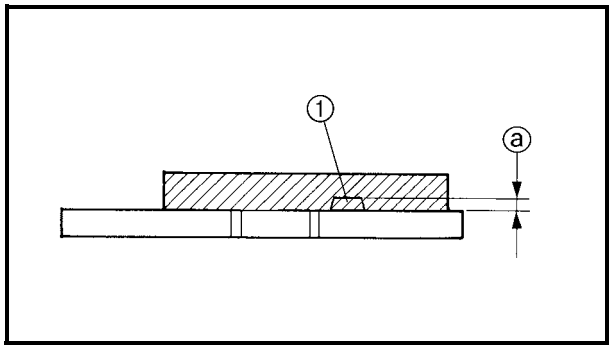

CHECKING THE FRONT BRAKE PAD

1.Remove:
- Front wheels

2.Check:
- Brake pad
  Wear indicators ① almost touch the brake disc → Replace the brake pads as a set.
  Refer to "FRONT AND REAR BRAKES" in CHAPTER 8.

Brake pad wear limit ⓐ:
1 mm (0.04 in)

3.Operate the brake lever.

4.Install:
- Front wheels

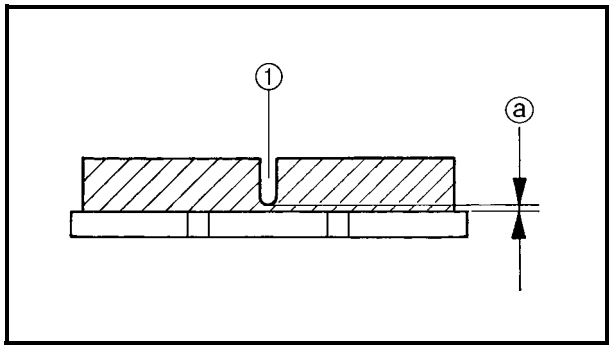

CHECKING THE REAR BRAKE PAD

1.Remove:
- Rear wheel (left)

2.Check:
- Brake pad
  Wear indicator groove ① almost disappeared → Replace the brake pads as a set.
  Refer to "FRONT AND REAR BRAKES" in CHAPTER 8.

Brake pad wear limit ⓐ:
1 mm (0.04 in)

3.Operate the brake lever or brake pedal.

4.Install:
- Rear wheel (left)

CHECKING THE BRAKE HOSE

1.Remove:
- Seat
- Front carrier
- Front fender
  Refer to "SEAT, CARRIERS, FENDERS AND FUEL TANK".
- Right footrest board
  Refer to "FOOTREST BOARDS".

Downloaded from www.Manualslib.com manuals search engine

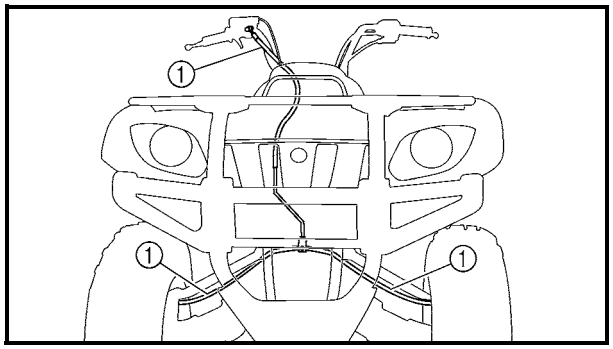

2.Check:
- Front brake hoses ①
- Rear brake hoses ②
  Cracks/wear/damage → Replace.
  Fluid leakage → Replace the hose.
  Refer to “FRONT AND REAR BRAKES” in CHAPTER 8.

NOTE:
Hold the machine in an upright position and apply the front or rear brake.

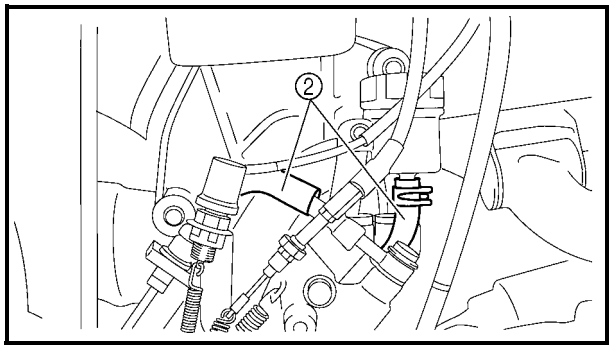

3.Check:
- Brake hose clamp
  Loosen → Tighten.

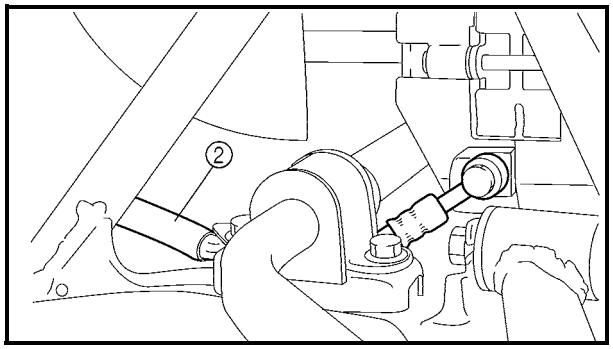

4.Install:
- Right footrest board
  Refer to “FOOTREST BOARDS”.
- Front fender
- Front carrier
- Seat
  Refer to “SEAT, CARRIERS, FENDERS AND FUEL TANK”.

BLEEDING THE HYDRAULIC BRAKE SYSTEM

⚠ WARNING

Bleed the brake system if:
- **The system has been disassembled.**
- **A brake hose or brake pipe have been loosened or removed.**
- **The brake fluid has been very low.**
- **The brake operation has been faulty.**

A loss of braking performance may occur if the brake system is not properly bled.

Downloaded from www.Manualslib.com manuals search engine

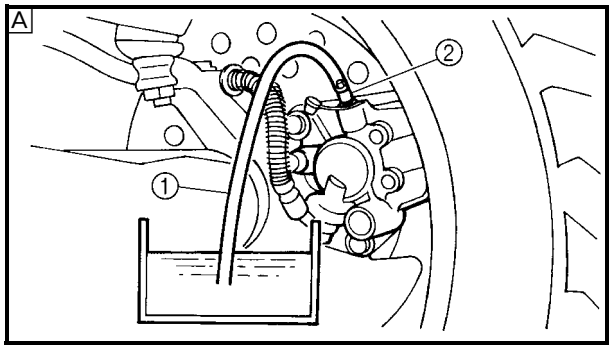

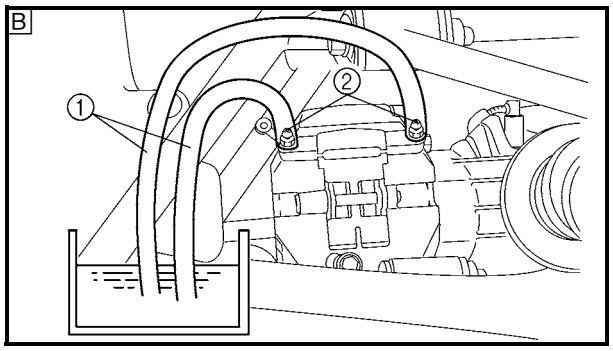

1.Bleed:
- Brake system

****

Air bleeding steps:

a. Add the proper brake fluid to the reservoir.
b. Install the diaphragm. Be careful not to spill any fluid or allow the reservoir to overflow.
c. Connect the clear plastic hose ① tightly to the caliper bleed screw ②.

A Front
B Rear

d. Place the other end of the hose into a container.
e. Slowly apply the brake lever or pedal several times.
f. Pull the lever in or push down on the pedal and hold it.
g. Loosen the bleed screw and allow the lever or pedal to travel towards its limit.
h. Tighten the bleed screw when the lever or pedal limit has been reached, then release the lever or pedal.
i. Repeat steps (e) to (h) until all the air bubbles have disappeared from the fluid.
j. Tighten the bleed screw.

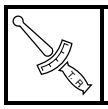	**Bleed screw:** **6 Nm (0.6 m • kg, 4.3 ft • lb)**

NOTE:

If bleeding is difficult, it may be necessary to let the brake fluid settle for a few hours. Repeat the bleeding procedure when the tiny bubbles in the system have disappeared.

k. Add brake fluid to the proper level.
   Refer to “CHECKING THE BRAKE FLUID LEVEL”.

⚠ WARNING

Check the operation of the brake after bleeding the brake system.

****

Downloaded from www.Manualslib.com manuals search engine

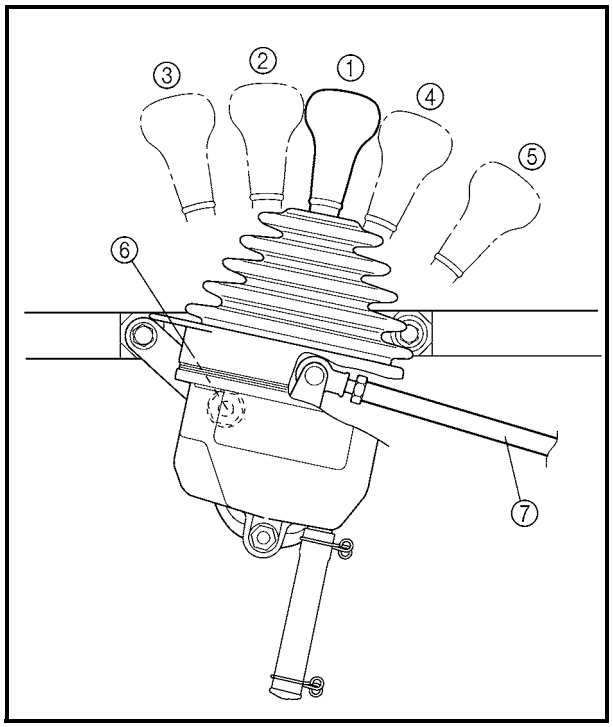

ADJUSTING THE SELECT LEVER CONTROL CABLE AND SHIFT ROD

① NEUTRAL
② HIGH
③ LOW
④ REVERSE
⑤ PARK
⑥ Control cable
⑦ Select lever shift rod

⚠ WARNING

Before moving the select lever, bring the machine to a complete stop and return the throttle lever to its closed position. Otherwise the transmission may be damaged.

1.Adjust:
- Rear brake pedal free play
  Refer to “ADJUSTING THE REAR BRAKE”.

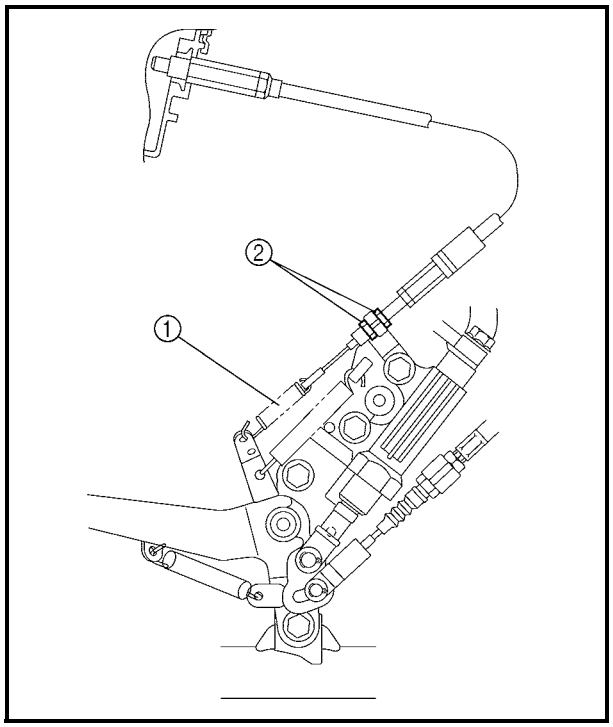

2.Adjust:
- Select lever control cable
- Select lever shift rod

****

Adjustment steps:
Control cable:
- Make sure the select lever is in NEUTRAL.
- Adjust the control cable so there is zero free play in the cable. When the adjustment is correct, slack in the return spring ① will be taken up.

NOTE:
In some cases it will be necessary to further adjust the cable with the locknuts ② arrangement that holds the cable to its mount.

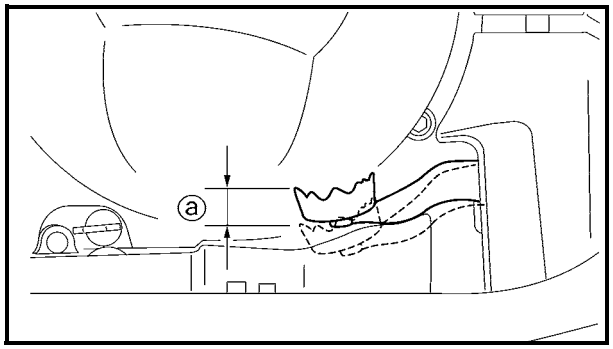

- When the brake begins to work “ⓐ = 25 ~ 40 mm (1.0 ~ 1.6 in)”, verify that the select lever can be shifted to REVERSE from NEUTRAL, to PARK from REVERSE and to NEUTRAL from REVERSE.
- Before the brake begins to work “ⓐ = 0 ~ 25 mm (0 ~ 1.0 in)”, verify that the select lever cannot be shifted to REVERSE from NEUTRAL, to REVERSE from PARK and to NEUTRAL from REVERSE.

Downloaded from www.Manualslib.com manuals search engine

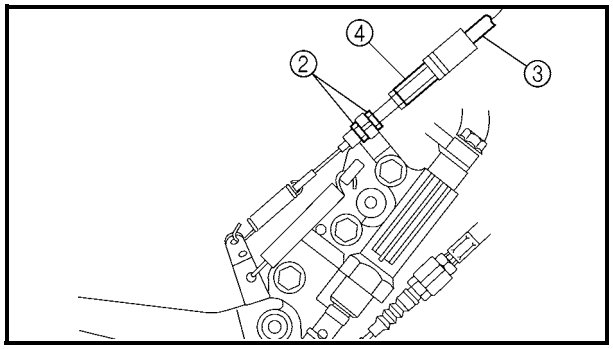

- Check that locknuts ② are tightened correctly.
- If the operation of the select lever is incorrect, adjust the select lever control cable ③ with the adjuster ④.

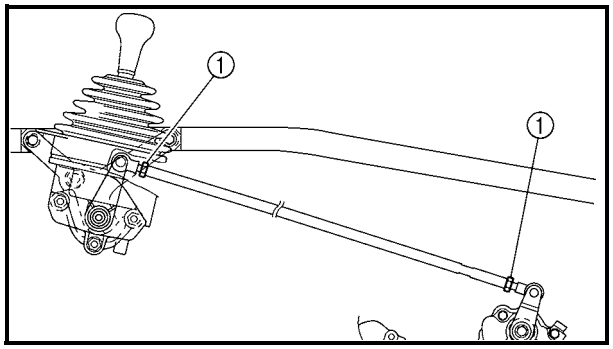

Select lever shift rod:

- Make sure the select lever is in NEUTRAL.
- Loosen both locknuts ①.
- Adjust the shift rod length for smooth and correct shifting.
- Tighten the locknuts ①.

****

ADJUSTING THE REAR BRAKE LIGHT SWITCH

NOTE:

The rear brake light switch is operated by movement of the brake pedal.
The rear brake light switch is properly adjusted when the brake light comes on just before the braking effect starts.

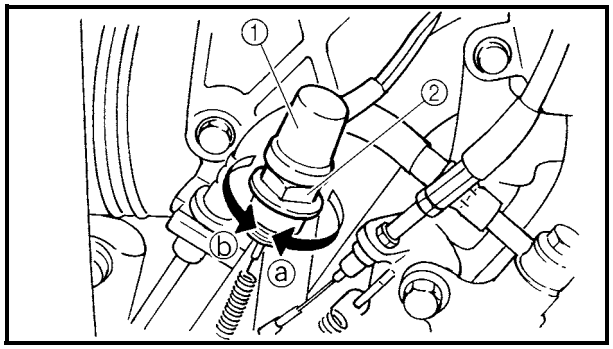

1.Check:
- Rear brake light operation timing
  Incorrect → Adjust.

2.Adjust:
- Rear brake light operation timing

****

- Hold the main body ① of the rear brake light switch so that it does not rotate and turn the adjusting nut ② in direction ⓐ or ⓑ until the rear brake light comes on at the proper time.

Direction ⓐ	**Brake light comes on sooner.**
Direction ⓑ	**Brake light comes on later.**

****

Downloaded from www.Manualslib.com manuals search engine

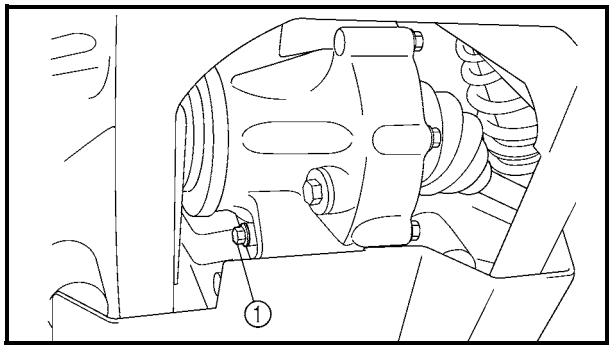

CHECKING THE FINAL GEAR OIL LEVEL

1. Place the machine on a level place.
2. Loosen:
   - Oil check bolt ①

NOTE:
- Loosen the slightly.
- Do not remove the bolt, otherwise the gear oil may come out.

3. Check:
   Check that gear oil seeps out from where the check bolt was loosened. If no gear oil seeps out, change the final gear oil.
   Refer to "CHANGING THE FINAL GEAR OIL".

CHANGING THE FINAL GEAR OIL

1. Place the machine on a level surface.
2. Place a container under the final gear case to collect the used oil.

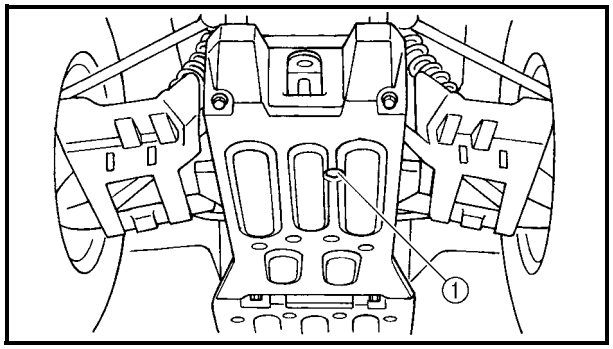

3. Remove:
   - Oil filler bolt
   - Drain plug ①
4. Drain:
   - Final gear oil

5. Install:
   - Drain plug — **23 Nm (2.3 m • kg, 16 ft • lb)**

NOTE:
Check the gasket (drain plug). If it is damaged, replace it with a new one.

Downloaded from www.Manualslib.com manuals search engine

6.Fill:
- Final gear case

Periodic oil change:
0.28 L (0.25 Imp qt, 0.30 US qt)
Total amount:
0.33 L (0.29 Imp qt, 0.35 US qt)
Recommended oil:
SAE 80 API "GL-4" Hypoid gear oil

CAUTION:
Take care not to allow foreign material to enter the final gear case.

7.Install:
- Oil filler bolt **23 Nm (2.3 m • kg, 16 ft • lb)**

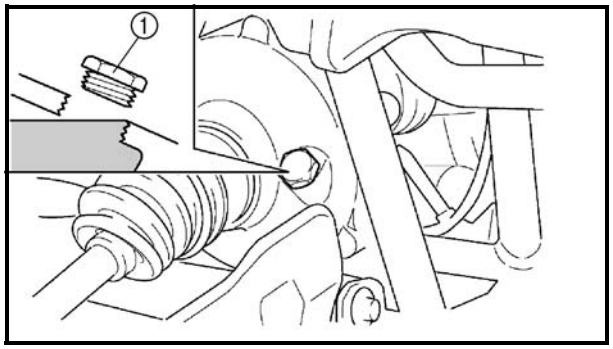

CHECKING THE DIFFERENTIAL GEAR OIL
1.Place the machine on a level surface.
2.Remove:
- Oil filter bolt ①

3.Check:
- Oil level
  Oil level should be up to the brim of hole.
  Oil level low → Add oil to proper level.

Recommended oil:
SAE 80 API "GL-4" Hypoid gear oil
Oil quantity (periodic oil change):
0.28 L (0.25 Imp qt, 0.30 US qt)

CAUTION:
Take care not allow foreign material to enter the differential gear case.

4.Install:
- Oil filter bolt **23 Nm (2.3 m • kg, 16 ft • lb)**

Downloaded from www.Manualslib.com manuals search engine

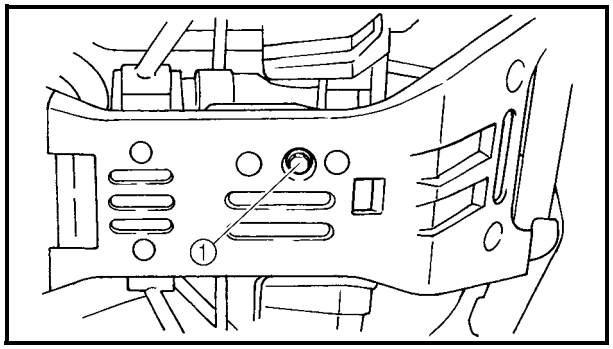

CHANGING THE DIFFERENTIAL GEAR OIL

1. Place the machine on a level surface.
2. Place a receptacle under the differential gear case.
3. Remove:
   - Oil filler bolt
   - Drain plug ①
4. Drain:
   - Differential gear oil
5. Install:
   - Drain plug — **10 Nm (1.0 m • kg, 7.2 ft • lb)**

NOTE:
Check the gasket (drain plug). If it is damaged, replace it with new one.

6. Fill:
   - Differential gear case

Periodic oil change:
0.28 L (0.25 Imp qt, 0.30 US qt)
Total amount:
0.33 L (0.29 Imp qt, 0.35 US qt)
Recommended oil:
SAE 80 API "GL-4" Hypoid gear oil

NOTE:
If gear oil is filled to the brim of the oil filler hole, oil may start leaking from the differential gear case breather hose. Therefore, check the quantity of the oil, not its level.

CAUTION:
Take care not to allow foreign material to enter the differential gear case.

7. Install:
   - Oil filler bolt — **23 Nm (2.3 m • kg, 16 ft • lb)**

Downloaded from www.Manualslib.com manuals search engine

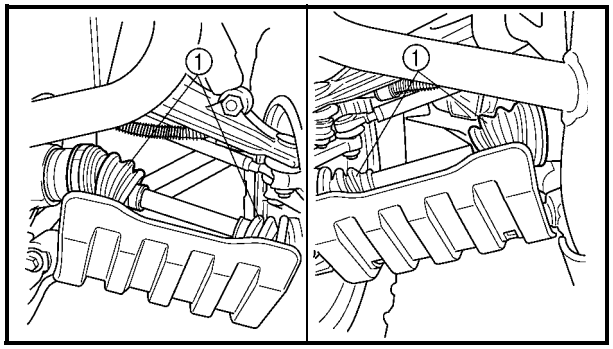

CHECKING THE CONSTANT VELOCITY JOINT DUST BOOT

1.Check:
- Dust boots ①
  Damage → Replace.
  Refer to "FRONT CONSTANT VELOCITY JOINTS AND DIFFERENTIAL GEAR" in CHAPTER 7.

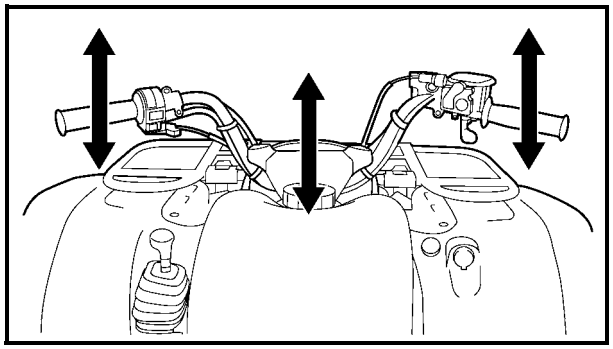

CHECKING THE STEERING SYSTEM

1.Place the machine on a level surface.
2.Check:
- Steering assembly bushings
  Move the handlebar up and down, and/or back and forth.
  Excessive play → Replace the steering stem bushings.

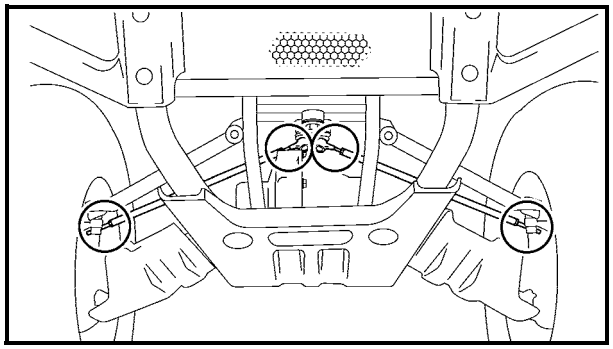

3.Check:
- Tie-rod ends
  Turn the handlebar to the left and/or right until it stops completely, then move the handlebar from the left to the right slightly. Tie-rod end has any vertical play → Replace the tie-rod end(s).

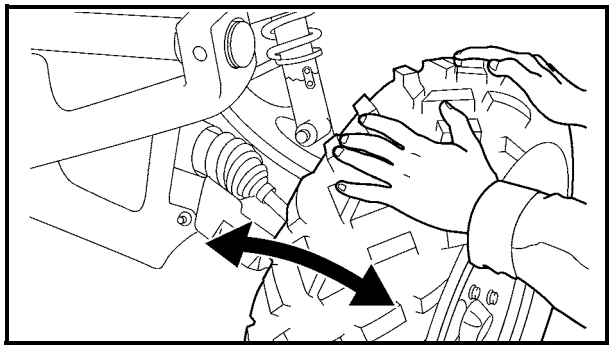

4.Raise the front end of the machine so that there is no weight on the front wheels.
5.Check:
- Ball joints and/or wheel bearings
  Move the wheels laterally back and forth.
  Excessive free play → Replace the front arms (upper and lower) and/or wheel bearings.

ADJUSTING THE TOE-IN

1.Place the machine on a level surface.
2.Measure:
- Toe-in
  Out of specification → Adjust.

	Toe-in: **0 ~ 10 mm (0.00 ~ 0.39 in)**

Downloaded from www.Manualslib.com manuals search engine

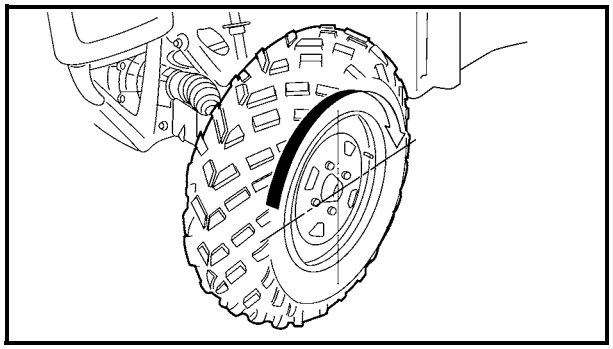

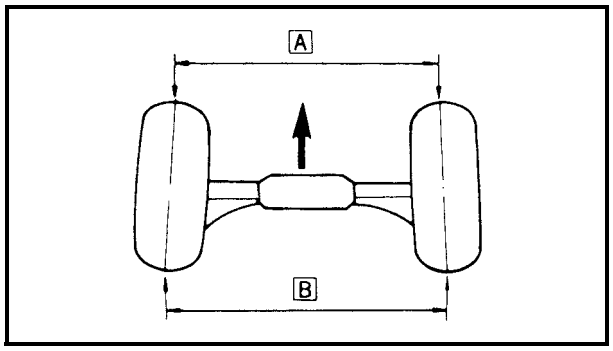

****

Measurement steps:

NOTE:
Before measuring the toe-in, make sure that the tire pressure is correct.

- Mark both front tire tread centers.
- Raise the front end of the machine so that there is no weight on the front tires.
- Face the handlebar straight ahead.
- Measure the width A between the marks.
- Rotate the front tires 180° until the marks are exactly opposite one another.
- Measure the width B between the marks.
- Calculate the toe-in using the formula given below.

Toe-in = B – A

- If the toe-in is incorrect, adjust it.

****

3.Adjust:
- Toe-in

WARNING

- **Be sure that both tie-rods are turned the same amount. If not, the machine will drift right or left even though the handlebar is positioned straight. This may lead to mishandling and an accident.**
- **After setting the toe-in to specification, run the machine slowly for some distance with both hands lightly holding the handlebar and check that the handlebar responds correctly. If not, turn either the right or left tie-rod within the toe-in specification.**

Downloaded from www.Manualslib.com manuals search engine

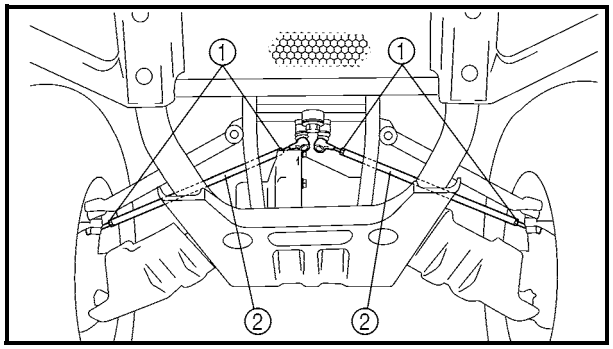

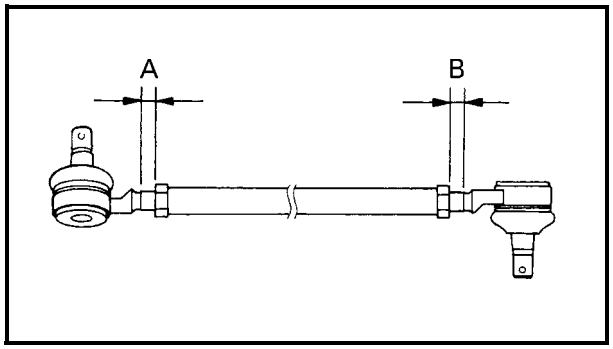

****

Adjustment steps:

- Mark both tie-rods ends.
  This reference point will be needed during adjustment.
- Loosen the locknuts (tie-rod end) ① of both tie-rods.
- The same number of turns should be given to both the right and left tie-rods ② until the specified toe-in is obtained. This is to keep the length of the rods the same.
- Tighten the rod end locknuts of both tie rods.

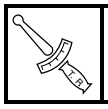	**Locknut (rod end):** **15 Nm (1.5 m • kg, 11 ft • lb)**

NOTE:
Adjust the rod ends so that A and B are equal.

****

ADJUSTING THE FRONT SHOCK ABSORBER

⚠ WARNING

Always adjust both front shock absorber spring preload to the same setting. Uneven adjustment can cause poor handling and loss of stability.

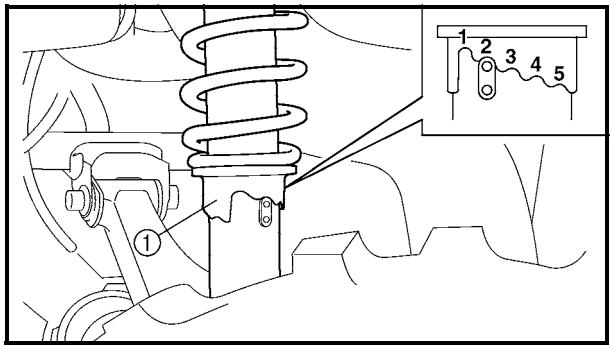

1.Adjust:

- Spring preload
  Turn the adjuster ① to increase or decrease the spring preload.

Standard position: 2
Minimum (Soft) position: 1
Maximum (Hard) position: 5

Downloaded from www.Manualslib.com manuals search engine

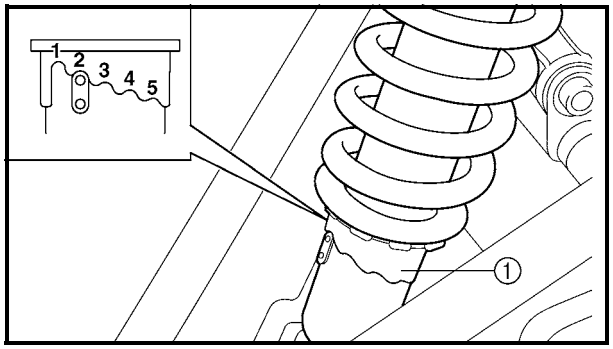

ADJUSTING THE REAR SHOCK ABSORBER

1.Remove:
- Rear wheels

2.Adjust:
- Spring preload
  Turn the adjuster ① to increase or decrease the spring preload.

NOTE:
The spring preload of the rear shock absorber can be adjusted to suit the rider's preference, weight, and the riding conditions.

Standard position: 2
Minimum (Soft) position: 1
Maximum (Hard) position: 5

3.Install:
- Rear wheels

CHECKING THE TIRE

⚠ WARNING

This model is equipped with low pressure tires. It is important that they be inflated correctly and maintained at the proper pressures.

- **TIRE CHARACTERISTICS**

1)Tire characteristics influence the handling of ATV's. The tires listed below have been approved by Yamaha Motor Co., Ltd. for this model. If other tire combinations are used, they can adversely affect your machine's handling characteristics and are therefore not recommended.

	Manufacturer	Size	Type
Front	DUNLOP	AT25 × 8-12	KT131
Rear	DUNLOP	AT25 × 10-12	KT135

Downloaded from www.Manualslib.com manuals search engine

• TIRE PRESSURE

1)Recommended tire pressure
Front 35 kPa (0.35 kg/cm^2, 5.0 psi)
Rear 30 kPa (0.30 kg/cm^2, 4.3 psi)

2)Tire pressure below the minimum specification could cause the tire to dislodge from the rim under severe riding conditions.
The following are minimums:
Front 32 kPa (0.32 kg/cm^2, 4.6 psi)
Rear 27 kPa (0.27 kg/cm^2, 3.9 psi)

3)Use no more than
Front 250 kPa (2.5 kg/cm^2, 36 psi)
Rear 250 kPa (2.5 kg/cm^2, 36 psi)
when seating the tire beads. Higher pressures may cause the tire to burst.
Inflate the tires slowly and carefully.
Fast inflation could cause the tire to burst.

• MAXIMUM LOADING LIMIT

1)Vehicle load limit (total weight of cargo, rider and accessories, and tongue weight): 220 kg (485 lb)
2)Front carrier : 45 kg (99 lb)
3)Rear carrier : 85 kg (187 lb)
4)Storage box: 2.0 kg (4.4 lb)
5)Trailer hitch:
Pulling load (total weight of trailer and cargo): 550 kg (1,212 lb)
Tongue weight (vertical weight on trailer hitch point): 15 kg (33 lb)
Be extra careful of the machine balance and stability when towing a trailer.

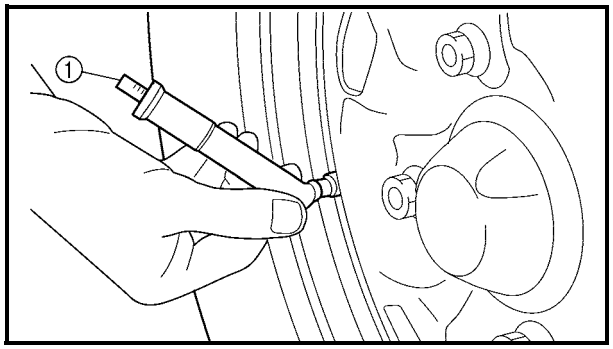

1.Measure:
• Tire pressure (cold tire pressure)
Out of specification → Adjust.

NOTE:
• The low-pressure tire gauge ① is included as standard equipment.
• If dust or the like is stuck to this gauge, it will not provide the correct readings. Therefore, take two measurements of the tire's pressure and use the second reading.

Downloaded from www.Manualslib.com manuals search engine

Cold tire pressure	Front	Rear
Standard	35 kPa (0.35 kg/cm², 5.0 psi)	30 kPa (0.30 kg/cm², 4.3 psi)
Minimum	32 kPa (0.32 kg/cm², 4.6 psi)	27 kPa (0.27 kg/cm², 3.9 psi)
Maximum	38 kPa (0.38 kg/cm², 5.5 psi)	33 kPa (0.33 kg/cm², 4.8 psi)

WARNING

Uneven or improper tire pressure may adversely affect the handling of this machine and may cause loss of control.
- **Maintain proper tire pressures.**
- **Set tire pressures when the tires are cold.**
- **Tire pressures must be equal in both front tires and equal in both rear tires.**

2.Check:
- Tire surfaces
  Wear/damage → Replace.

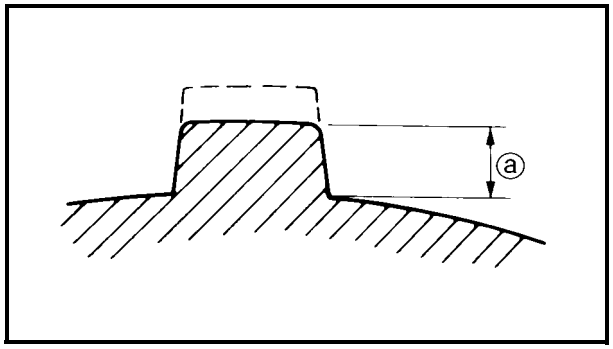

Tire wear limit ⓐ:
Front and rear: 3.0 mm (0.12 in)

WARNING

It is dangerous to ride with a worn-out tire. When tire wear is out of specification, replace the tire immediately.

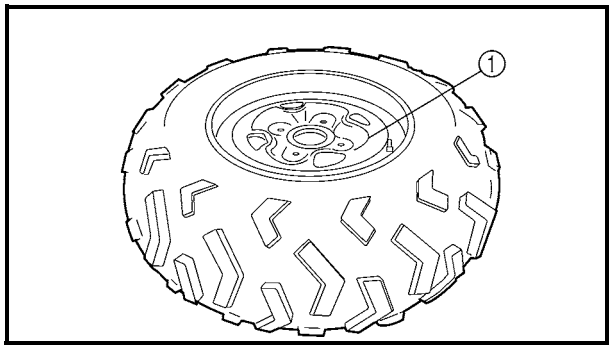

CHECKING THE WHEEL

1.Check:
- Wheels ①
  Damage/bends → Replace.

NOTE:
Always balance the wheel when a tire or wheel has been changed or replaced.

Downloaded from www.Manualslib.com manuals search engine

WARNING

- **Never attempt even small repairs to the wheel.**
- **Ride conservatively after installing a tire to allow it to seat itself properly on the rim.**

CHECKING AND LUBRICATING THE CABLE

WARNING

A damaged cable sheath may cause corrosion and interfere with the cable movement. An unsafe condition may result so replace a damaged cable as soon as possible.

1.Check:
- Cable sheath
  Damage → Replace.

2.Check:
- Cable operation
  Unsmooth operation → Lubricate or replace.

Recommended lubricant:
Yamaha chain and cable lube or Engine oil

NOTE:
Hold the cable end up and apply several drops of lubricant to the cable.

3.Apply:
- Lithium soap base grease
  (onto end of the cable)

LUBRICATING THE LEVERS, PEDAL, ETC.

1.Lubricate the pivoting parts.

Recommended lubricant:
Yamaha chain and cable lube or Engine oil

Downloaded from www.Manualslib.com manuals search engine

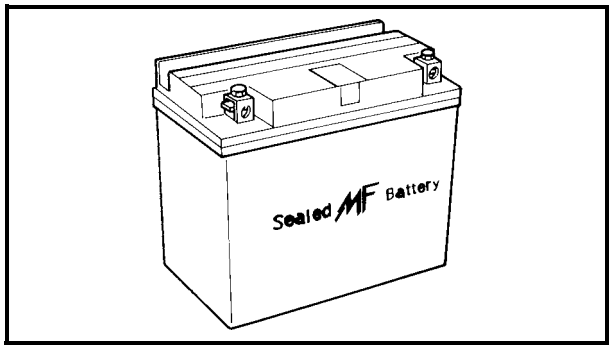

EB305000

ELECTRICAL

CHECKING THE BATTERY

NOTE:

Since the MF battery is a sealed type battery, it is not possible to measure the specific gravity of the electrolyte in order to check the charge state of the battery. Therefore the charge of the battery has to be checked by measuring the voltage at the battery terminals.

CAUTION:

CHARGING METHOD

- **This is a sealed type battery. Never remove the sealing caps. If the sealing caps have been removed, the balance will not be maintained and battery performance will deteriorate.**
- **Charging time, charging current and charging voltage for the MF battery are different from those of general type batteries. The MF battery should be charged as explained in "CHARGING METHOD". If the battery is overcharged, the electrolyte level will drop considerably. Therefore, take special care when charging the battery.**

⚠ WARNING

Battery electrolyte is dangerous; it contains sulfuric acid which is poisonous and highly caustic.

Always follow these preventive measures:

- **Avoid bodily contact with electrolyte as it can cause severe burns or permanent eye injury.**
- **Wear protective eye gear when handling or working near batteries.**

Antidote (EXTERNAL):

- **SKIN - Wash with water.**
- **EYES - Flush with water for 15 minutes and get immediate medical attention.**

Antidote (INTERNAL):

- **Drink large quantities of water or milk followed with milk of magnesia, beaten egg or vegetable oil. Get immediate medical attention.**

Downloaded from www.Manualslib.com manuals search engine

Batteries generate explosive hydrogen gas. Always follow these preventive measures:
- **Charge batteries in a well-ventilated area.**
- **Keep batteries away from fire, sparks or open flames (e.g., welding equipment, lighted cigarettes, etc.)**
- **DO NOT SMOKE when charging or handling batteries.**

KEEP BATTERIES AND ELECTROLYTE OUT OF REACH OF CHILDREN.

1.Remove:
- Seat
- Battery holding bracket
- Battery lead cover

Refer to “SEAT, CARRIERS, FENDERS AND FUEL TANK”.

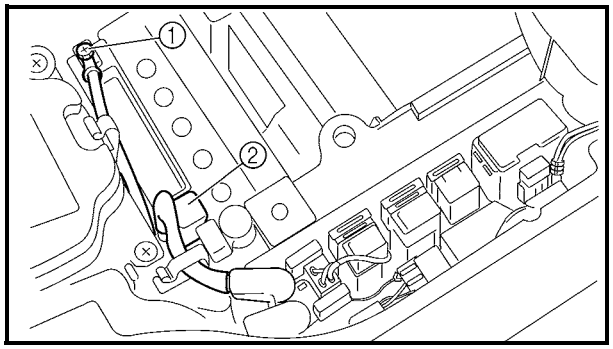

2.Disconnect:
- Battery leads

CAUTION:

First disconnect the negative lead ①, then disconnect the positive lead ②.

3.Remove:
- Battery

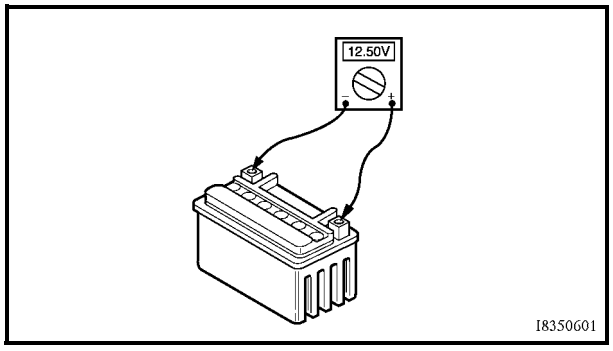

4.Check:
- Battery condition

****

Checking steps:
- Connect a digital voltmeter to the battery terminals.

Tester (+) lead → battery (+) terminal **Tester (–) lead → battery (–) terminal**

NOTE:

The charge state of an MF battery can be checked by measuring the open-circuit voltage (i.e. the voltage when the positive terminal is disconnected).

Open-circuit voltage	Charging time
12.8 V or higher	No charging is necessary.

Downloaded from www.Manualslib.com manuals search engine

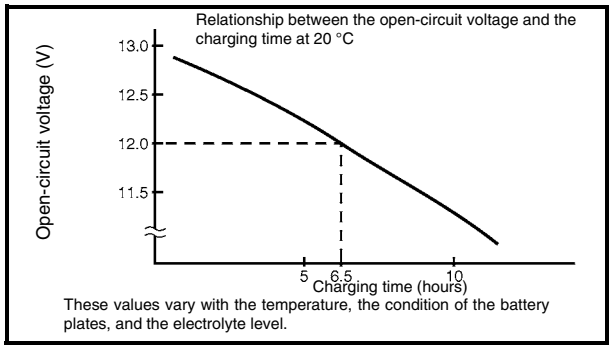

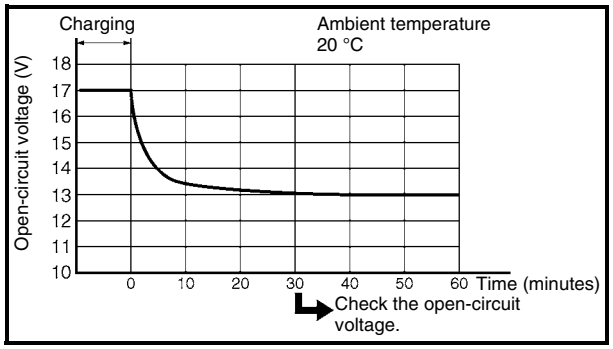

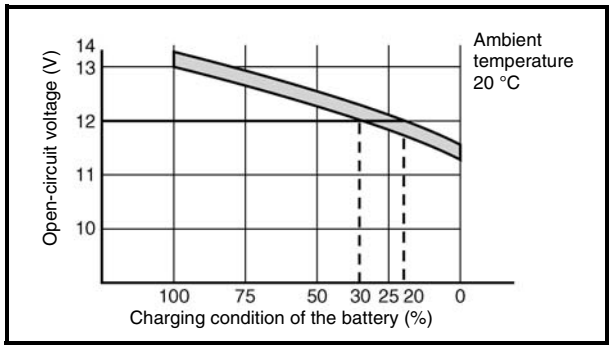

- Check the condition of the battery using the following charts.

Example:

- Open-circuit voltage = 12.0 V
- Charging time = 6.5 hours
- Charge condition of the battery = 20 ~ 30%
- Charging method for MF batteries

CAUTION:

- **If it is impossible to set the standard charging current, be careful not to overcharge.**
- **When charging the battery, be sure to remove it from the motorcycle. (If charging has to be done with the battery mounted on the motorcycle, be sure to disconnect the wire at the negative terminal.)**
- **Never remove the sealing caps of an MF battery.**
- **Make sure that the charging clips are in full contact with the terminal and that they are not shorted together. (A corroded clip on the charger may cause the battery to generate heat in the contact area. A weak clip spring may cause sparks.)**
- **Before removing the clips from the battery terminals, be sure to turn off the charger's power switch.**
- **The open-circuit voltage variation for the MF battery, after charging, is shown below. As shown in the figure, the open-circuit voltage stabilizes about 30 minutes after charging has been completed. Therefore, wait 30 minutes after charging is completed before measuring the open-circuit voltage.**

Downloaded from www.Manualslib.com manuals search engine

Charging method using a variable voltage charger

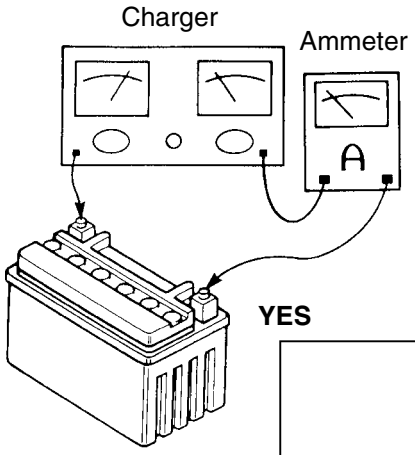

NOTE:
Leave the battery unused for more than 30 minutes before measuring its open-circuit voltage.

NOTE:
Set the charging voltage to 16 ~ 17 V. (If the charging voltage is lower, charging will be insufficient, if it is higher, the battery will be over-charged.)

Measure the open-circuit voltage prior to charging.

↓

Connect a charger and ammeter to the battery and start charging.

↓

Is the amperage higher than the standard charging amperage written on the battery?

YES → Adjust the voltage to obtain the standard charging amperage.

NO → Adjust the charging voltage to 20 ~ 25 V.

↓

Monitor the amperage for 3 ~ 5 minutes. Is the standard charging amperage exceeded?

YES → Adjust the voltage to obtain the standard charging amperage.

NO → If the amperage does not exceed the standard charging amperage after 5 minutes, replace the battery.

↓

Set the timer to the charging time determined by the open-circuit voltage.
Refer to “CHECKING THE BATTERY”.

↓

If the required charging time exceeds 5 hours, it is advisable to check the charging amperage after 5 hours. If there is any change in the amperage, readjust the voltage to obtain the standard charging amperage.

↓

Leave the battery unused for more than 30 minutes before measuring its open-circuit voltage.
12.8 V → Charging is complete.
12.0 ~ 12.7 V → Recharging is required.
Under 12.0 V → Replace the battery.

Downloaded from www.Manualslib.com manuals search engine

Charging method using a constant voltage charger

Measure the open-circuit voltage prior to charging.

NOTE:
Leave the battery unused for more than 30 minutes before measuring its open-circuit voltage.

↓

Connect a charger and ammeter to the battery and start charging.

↓

Is the amperage higher than the standard charging amperage written on the battery?

YES →

Charge the battery until the charging voltage reaches 15 V.

NOTE:
Set the charging time to a maximum of 20 hours.

↓

Leave the battery unused for more than 30 minutes before measuring its open-circuit voltage.
12.8 V → Charging is complete.
12.0 ~ 12.7 V → Recharging is required.
Under 12.0 V → Replace the battery.

CAUTION:
Constant amperage chargers are not suitable for charging MF batteries.

NO →

This type of battery charger cannot charge an MF battery. A variable voltage charger is recommended.

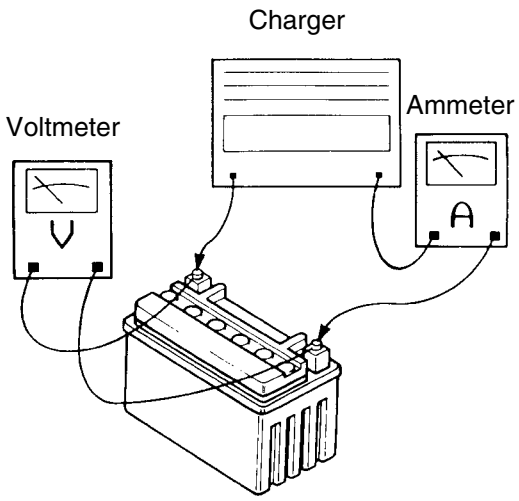

Downloaded from www.Manualslib.com manuals search engine

5.Check:
- Battery terminals
  Dirty → Clean with a wire brush.
  Poor connection → Correct.

NOTE:
After cleaning the terminals, apply a light coat of grease.

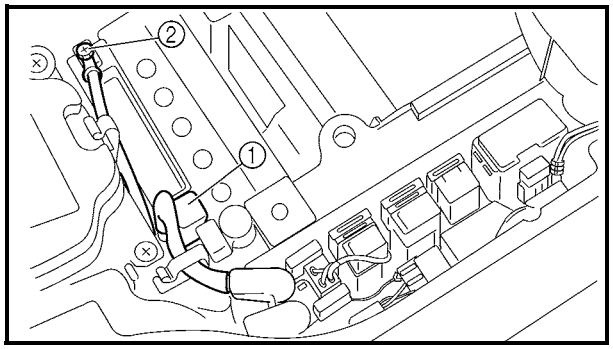

6.Install:
- Battery

7.Connect:
- Battery leads

CAUTION:
First, connect the positive lead ①, then connect the negative lead ②.

8.Install:
- Battery lead cover
- Battery holding bracket
- Seat
  Refer to "SEAT, CARRIERS, FENDERS AND FUEL TANK".

CHECKING THE FUSE

CAUTION:
Always turn off the main switch when checking or replacing a fuse. Otherwise, a short circuit may occur.

1.Remove:
- Seat
  Refer to "SEAT, CARRIERS, FENDERS AND FUEL TANK".

2.Inspect:
- Fuses

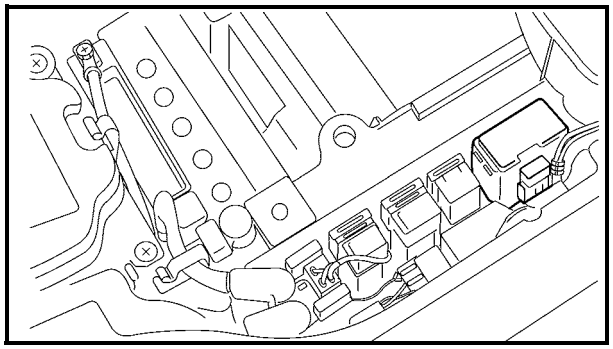

****

Checking steps:
- Connect the pocket tester to the fuse and check it for continuity.

Downloaded from www.Manualslib.com manuals search engine

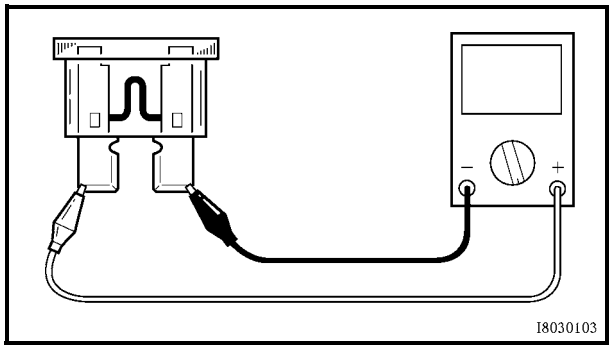

NOTE:
Set the tester to the "Ω × 1" position.

	Pocket tester: **P/N. YU-03112, 90890-03112**

- If the tester indicates o, replace the fuse.

****

3.Replace:
- Blown fuse

****

Replacement steps:
- Turn off the ignition.
- Install a new fuse of the proper amperage.
- Turn on switches to verify operation of the related electrical devices.
- If the fuse immediately blows again, check the electrical circuit.

****

Description	Current rating	Quantity
Main	30 A	1
Headlight	15 A	1
Ignition	10 A	1
Terminal (Auxiliary DC jack)	10 A	1
4WD (Four-wheel drive)	3 A	1
Signaling system fuse	10 A	1
Backup fuse (odometer)	10 A	1
Reserve	30 A	1
Reserve	15 A	1
Reserve	10 A	1
Reserve	3 A	1

⚠ WARNING

Never use a fuse with a rating other than that specified. Never use other materials in place of a fuse. An improper fuse may cause extensive damage to the electrical system, a malfunction of the lighting and ignition systems and could possibly cause a fire.

Downloaded from www.Manualslib.com manuals search engine

4.Install:
- Seat
  Refer to “SEAT, CARRIERS, FENDERS AND FUEL TANK”.

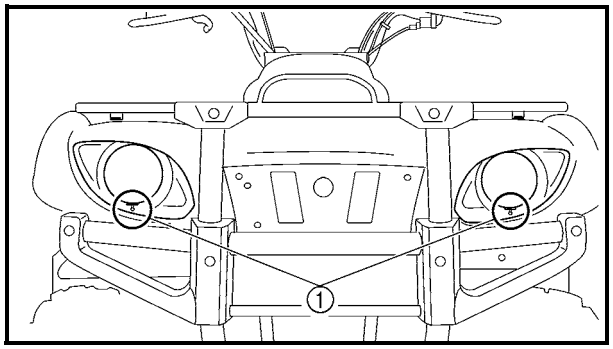

ADJUSTING THE HEADLIGHT BEAM

1.Adjust:
- Headlight beam (vertically)
  Turn the adjuster ① in or out.

Turning in	**Headlight beam raised.**
Turning out	**Headlight beam lowered.**

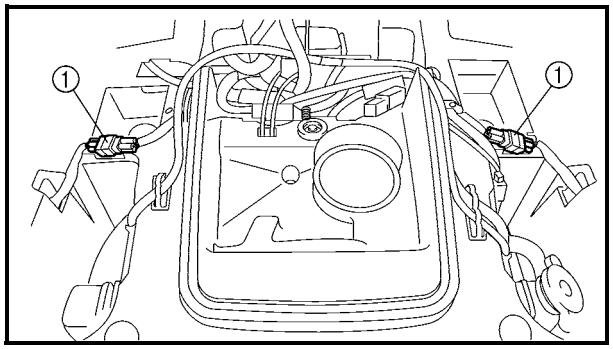

CHANGING THE HEADLIGHT BULB

1.Remove:
- Front carrier
- Front fender panel
  Refer to “SEAT, CARRIERS, FENDERS AND FUEL TANK”.

2.Disconnect:
- Headlight lead couplers ①

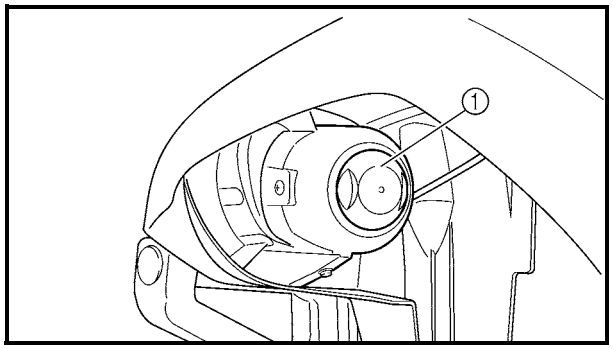

3.Remove:
- Cover ①

Downloaded from www.Manualslib.com manuals search engine

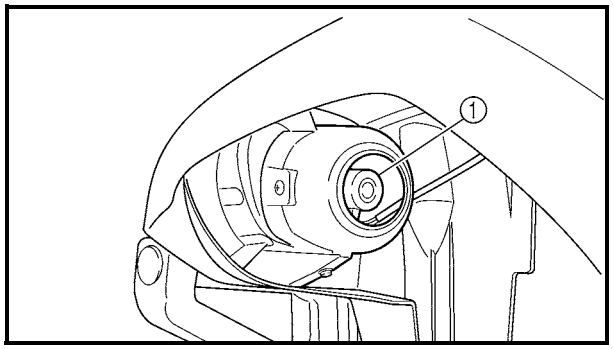

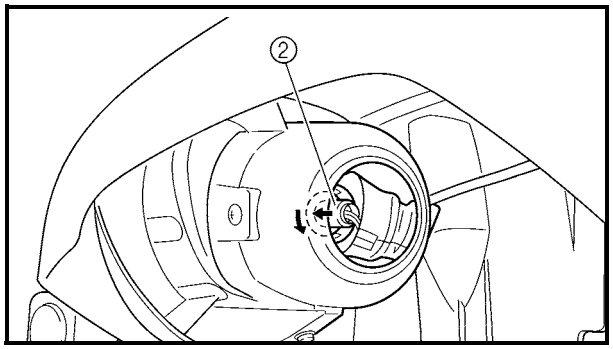

4.Remove:
- Cover ①
- Bulb holder ②
- Bulb

NOTE:
Turn the bulb holder counterclockwise and remove the defective bulb.

⚠ WARNING
Keep flammable products and your hands away from the bulb while it is on, since it will be hot. Do not touch the bulb until it cools down.

5.Install:
- Bulb New
  Secure the new bulb with the headlight unit.

CAUTION:
Avoid touching the glass part of the bulb. Keep it free from oil; otherwise, the transparency of the glass, life of the bulb, and luminous flux will be adversely affected. If oil gets on the bulb, thoroughly clean it with a cloth moistened with alcohol or lacquer thinner.

6.Install:
- Bulb holder
- Cover
- Cover

7.Connect:
- Headlight lead couplers

8.Install:
- Front fender panel
- Front carrier
  Refer to “SEAT, CARRIERS, FENDERS AND FUEL TANK”.

Downloaded from www.Manualslib.com manuals search engine

ENGINE

ENGINE REMOVAL

AIR DUCTS, MUFFLER AND EXHAUST PIPE

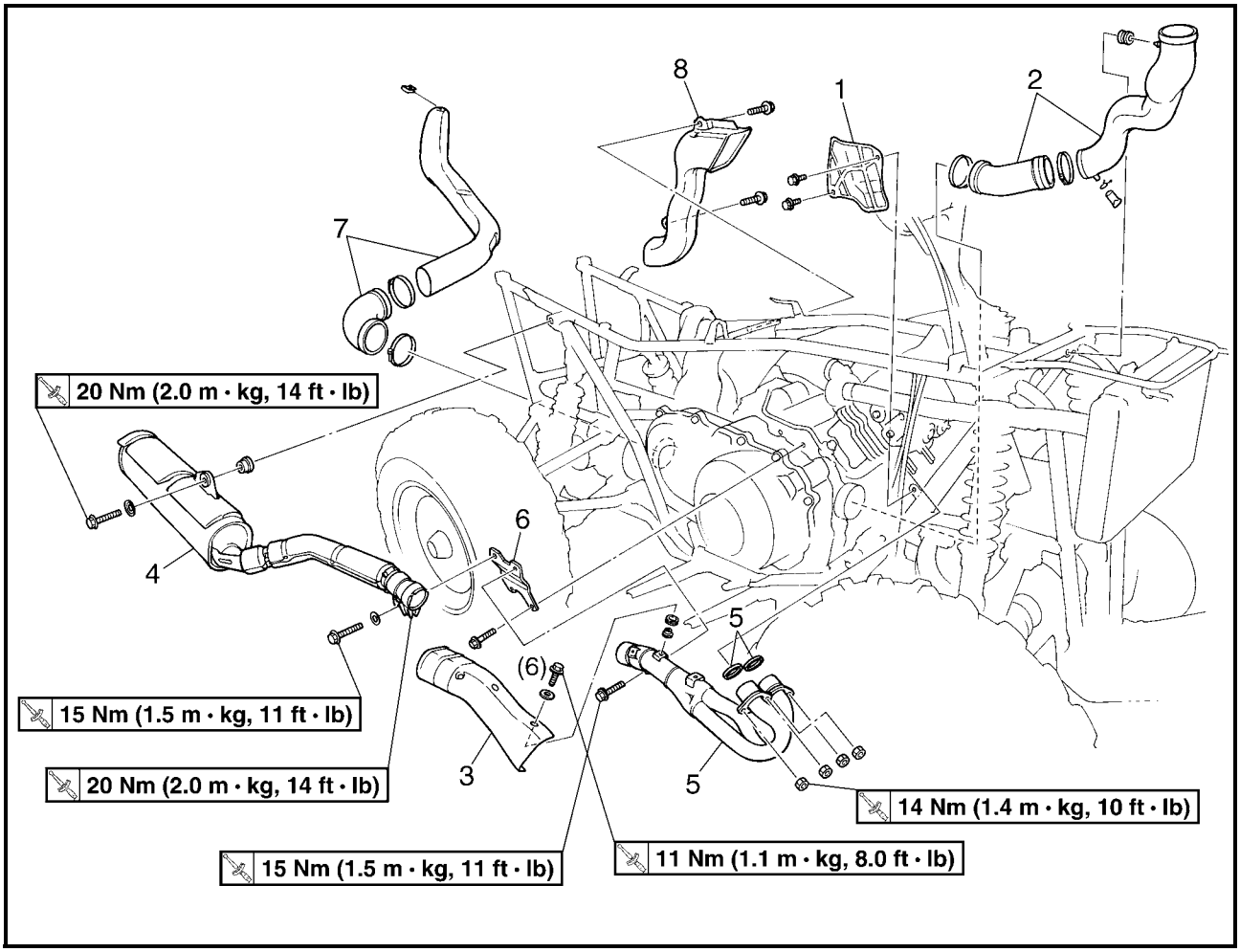

Order	Job name/Part name	Q'ty	Remarks
	Removing the air ducts, muffler and exhaust pipe		Remove the parts in the order below.
	Engine oil		Drain. Refer to "CHANGING THE ENGINE OIL" in CHAPTER 3.
	Engine side panel/engine side cover Front and rear fender/footrest boards Fuel tank/rubber cover		Refer to "SEAT, CARRIERS, FENDERS AND FUEL TANK" in CHAPTER 3.
	Carburetor assembly		Refer to "CARBURETOR" in CHAPTER 6.
1	Protector	1	
2	Air duct assembly 1	1	
3	Exhaust pipe protector	1	
4	Muffler	1	
5	Exhaust pipe/gasket	2/2	
6	Exhaust pipe stay	1	
7	Air duct assembly 2	2	

Downloaded from www.Manualslib.com manuals search engine

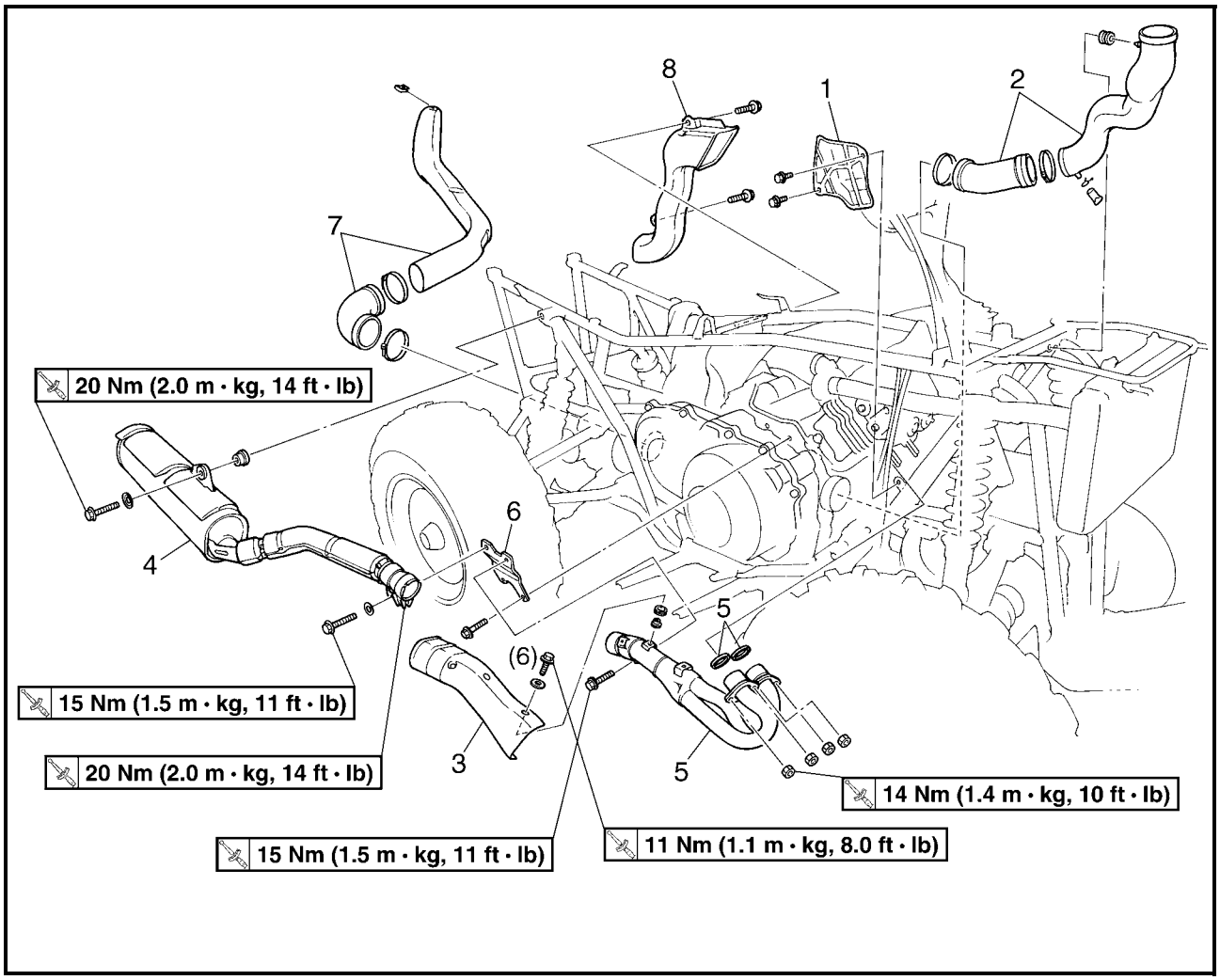

Order	Job name/Part name	Q'ty	Remarks
8	Air duct assembly 3	1	For installation, reverse the removal procedure.

Downloaded from www.Manualslib.com manuals search engine

SELECT LEVER UNIT AND COOLANT RESERVOIR

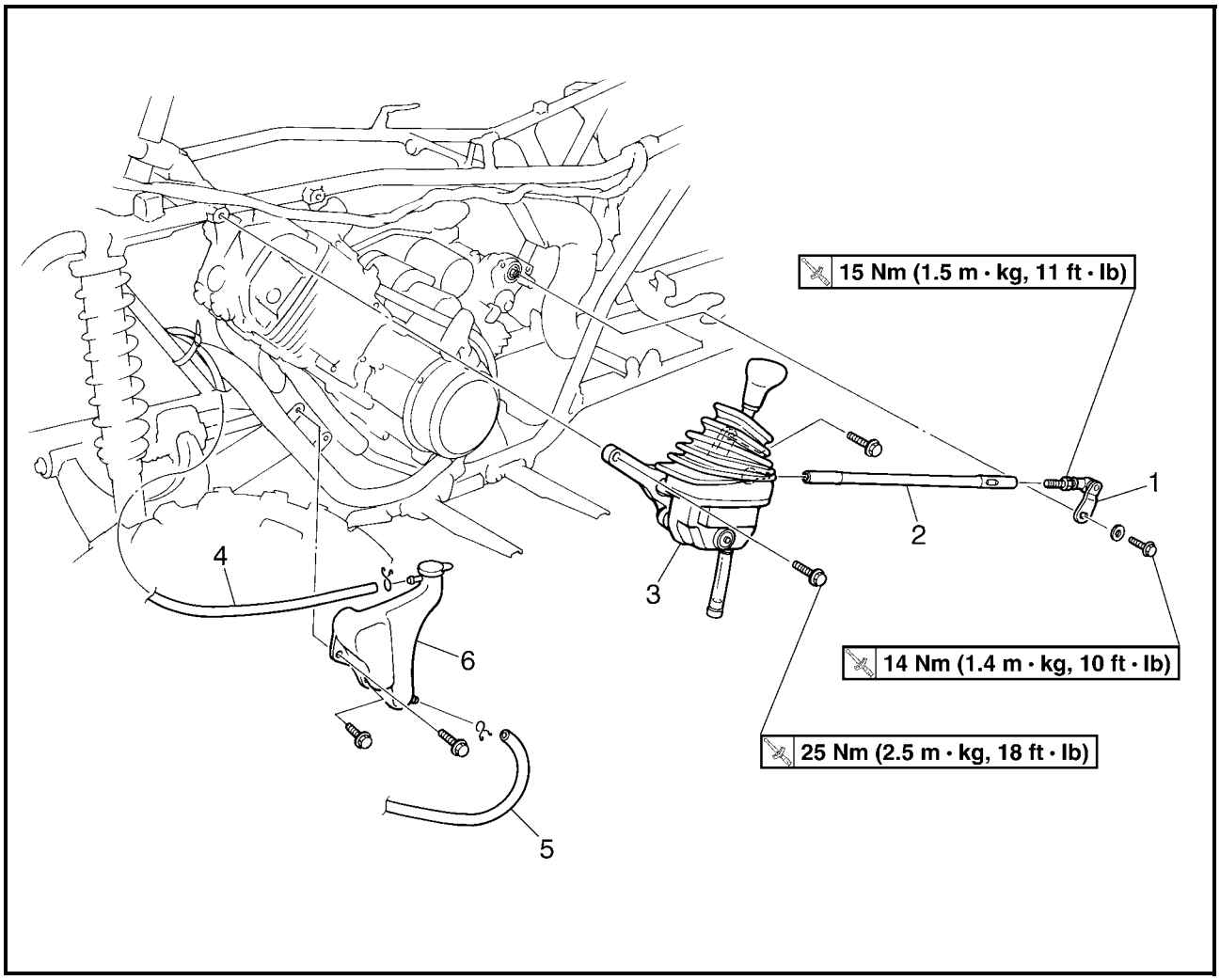

Order	Job name/Part name	Q'ty	Remarks
	Removing the select lever unit and coolant reservoir		Remove the parts in the order below.
	Coolant		Drain. Refer to "CHANGING THE COOLANT" in CHAPTER 3.
1	Shift arm	1	
2	Select lever shift rod	1	
3	Select lever unit	1	
4	Coolant reservoir breather hose	1	
5	Coolant reservoir hose	1	
6	Coolant reservoir	1	
			For installation, reverse the removal procedure.

Downloaded from www.Manualslib.com manuals search engine

HOSES AND LEADS

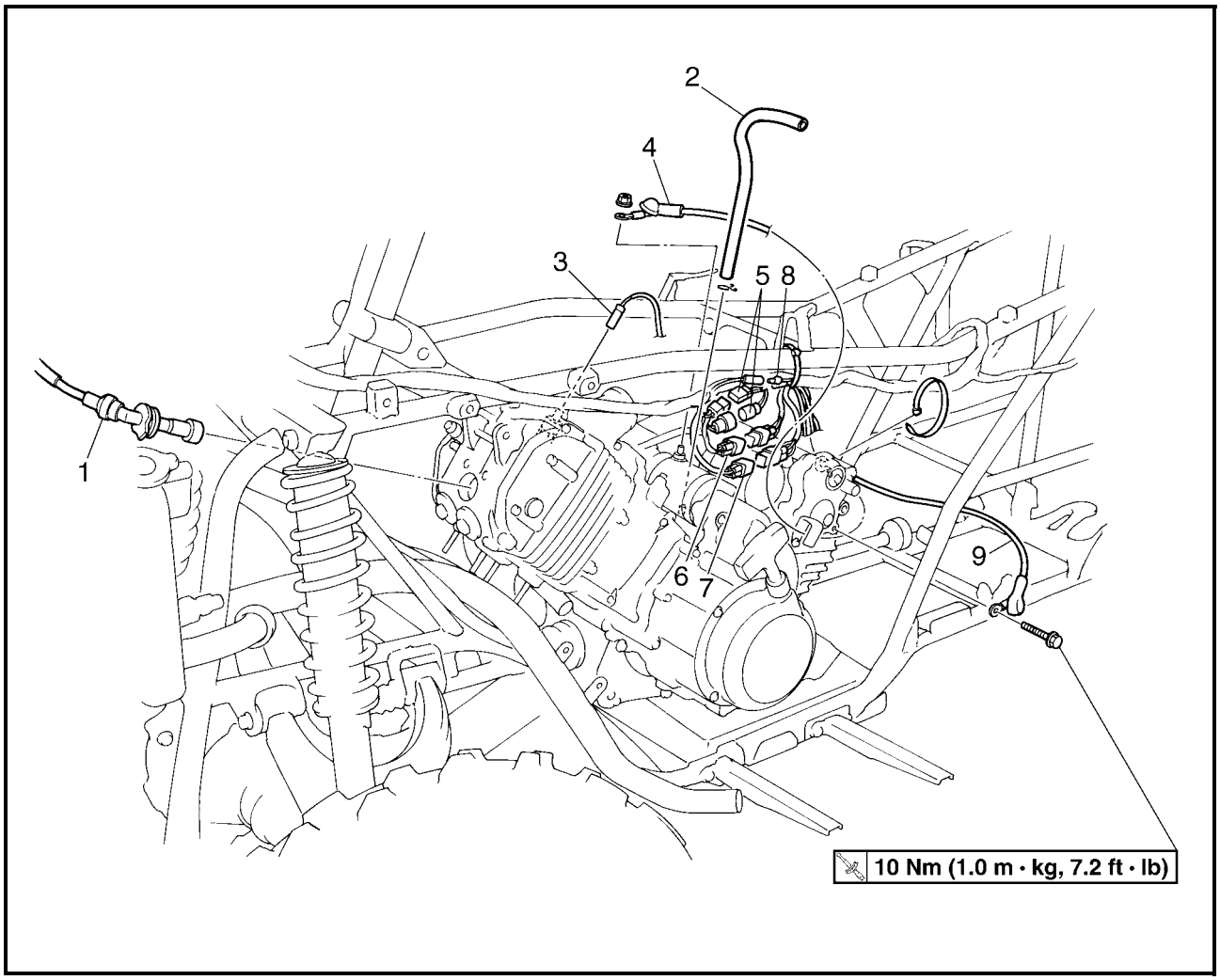

Order	Job name/Part name	Q'ty	Remarks
	Removing the hoses and leads		Remove the parts in the order below.
	Radiator inlet hose		Refer to "THERMOSTAT" in CHAPTER 5.
	Water pump assembly		Refer to "WATER PUMP" in CHAPTER 5.
1	Spark plug lead	1	
2	Crankcase breather hose	1	
3	Thermo switch lead	1	
4	Starter motor lead	1	
5	AC magneto lead coupler	2	
6	Speed sensor lead coupler	1	
7	Neutral switch lead coupler	1	
8	Reverse switch lead	1	Green/White
9	Engine ground lead	1	
			For installation, reverse the removal procedure.

Downloaded from www.Manualslib.com manuals search engine

ENGINE MOUNTING BOLTS

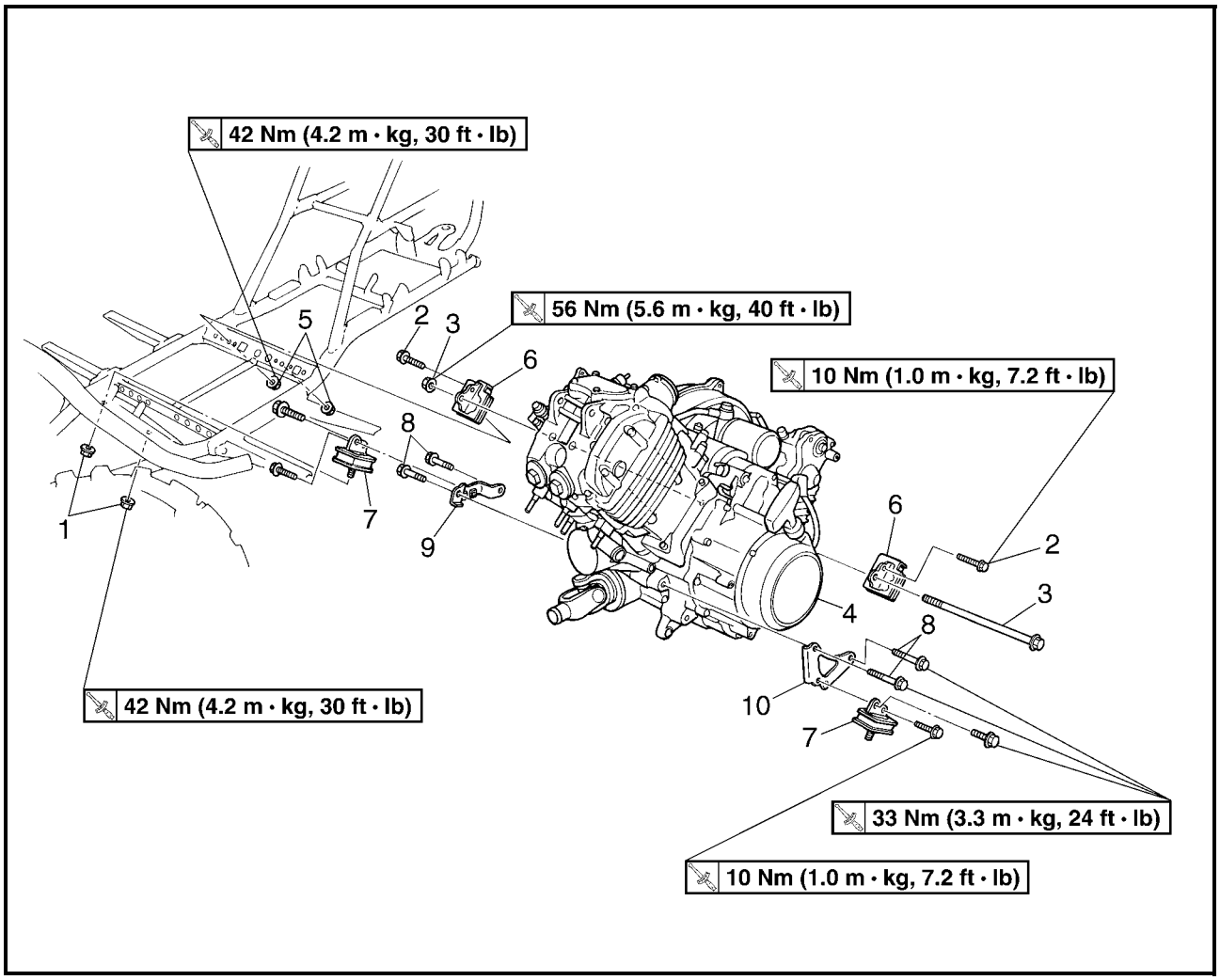

Order	Job name/Part name	Q'ty	Remarks
	Removing the engine mounting bolt		Remove the parts in the order below.
	Engine skid plate (front) Engine skid plate (center) Engine skid plate (rear)		Refer to "SEAT, CARRIERS, FENDERS AND FUEL TANK" in CHAPTER 3.
	Rear wheels		Refer to "REAR WHEELS AND BRAKE DISC" in CHAPTER 8.
	Final drive gear assembly		Refer to "REAR CONSTANT VELOCITY JOINTS AND FINAL DRIVE GEAR AND DRIVE SHAFT" in CHAPTER 7.

Downloaded from www.Manualslib.com manuals search engine

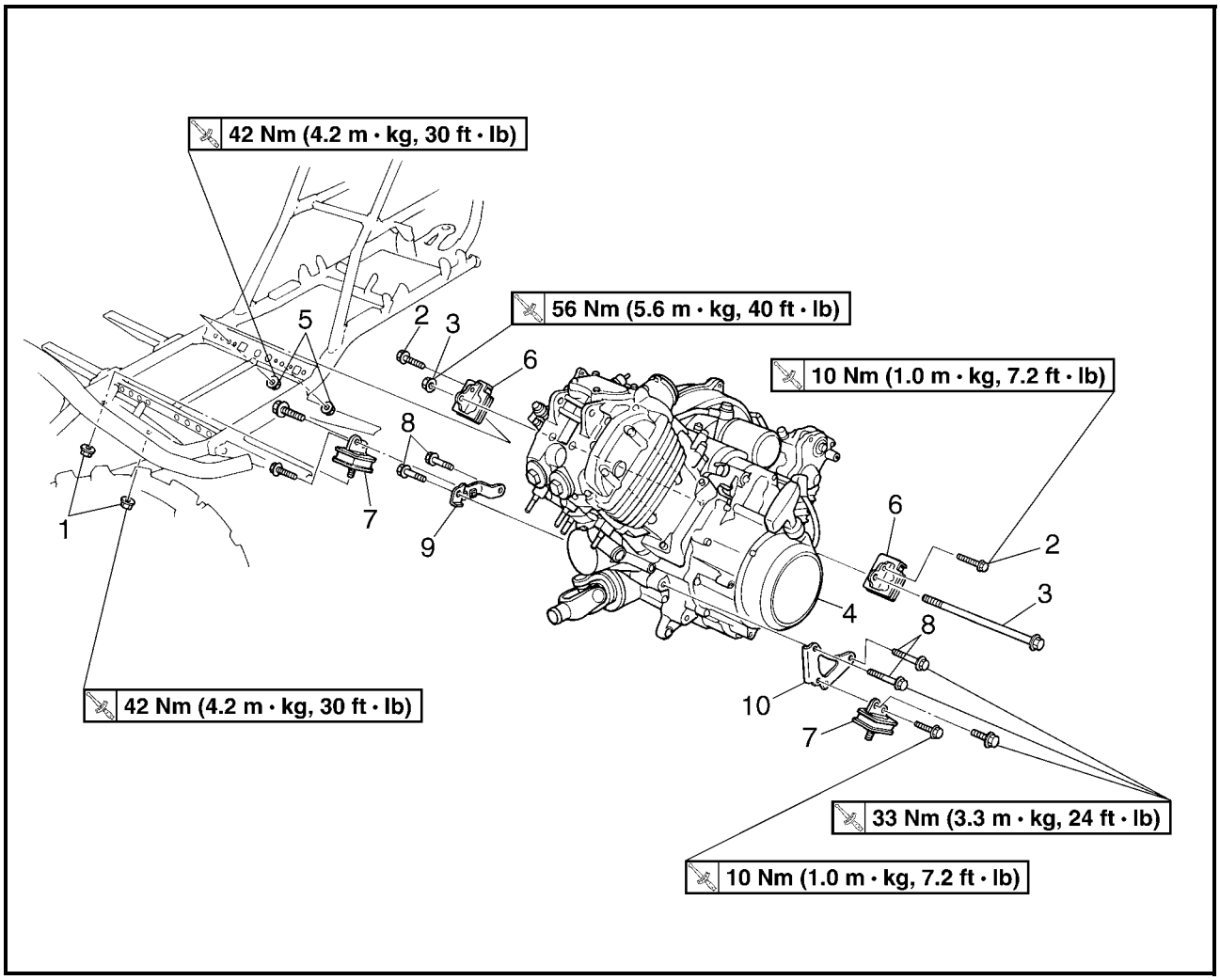

Order	Job name/Part name	Q'ty	Remarks
1	Rubber damper nut (front)	2	**NOTE:** Remove the engine assembly from the left side of the machine.
2	Engine mounting bolt (rear-upper)	2	
3	Engine mounting bolt (rear-lower)/nut	1/1	
4	Engine assembly	1	
5	Rubber damper nut (rear)	2	**CAUTION:** **Install all of the bolts/nuts and then tighten them to full torque specifications.**
6	Rubber damper (rear)	2	
7	Rubber damper (front)	2	
8	Engine mounting bolt (front)	4	
9	Engine bracket (right)	1	
10	Engine bracket (left)	1	Refer to "INSTALLING THE ENGINE".
			For installation, reverse the removal procedure.

Downloaded from www.Manualslib.com manuals search engine

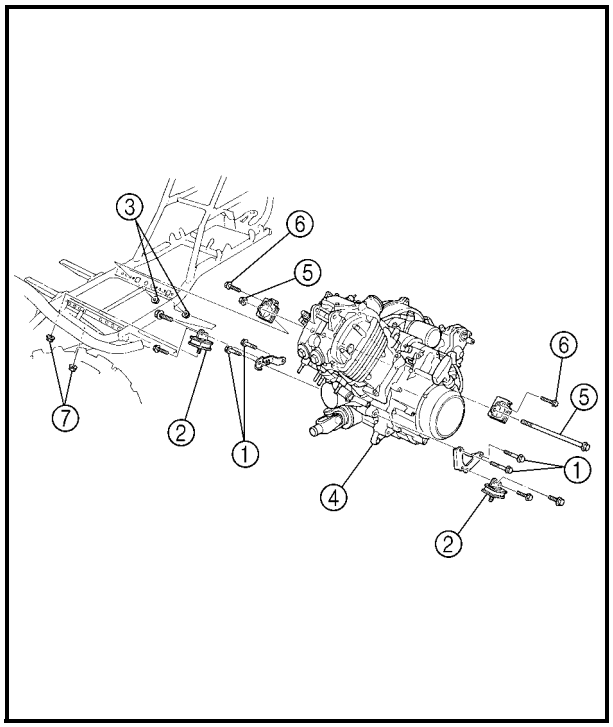

INSTALLING THE ENGINE

1.Install:

- Engine mounting bolt (front) ①
- Rubber damper (front) ②
- Rubber damper nut (rear) ③
- Engine assembly ④
- Engine mounting bolt (rear lower)/nut ⑤
- Engine mounting bolt (rear upper) ⑥
- Rubber damper nut (front) ⑦

NOTE:

Do not fully tighten the bolts and nuts.

2.Tighten:

- Engine mounting bolt (front) ①
  33 Nm (3.3 m • kg, 24 ft • lb)
- Rubber damper nut (rear) ③
  42 Nm (4.2 m • kg, 30 ft • lb)
- Engine mounting bolt (rear lower) ⑤
  56 Nm (5.6 m • kg, 40 ft • lb)
- Engine mounting bolt (rear upper) ⑥
  10 Nm (1.0 m • kg, 7.2 ft • lb)
- Rubber damper nut (front) ⑦
  42 Nm (4.2 m • kg, 30 ft • lb)

Downloaded from www.Manualslib.com manuals search engine

CYLINDER HEAD COVER

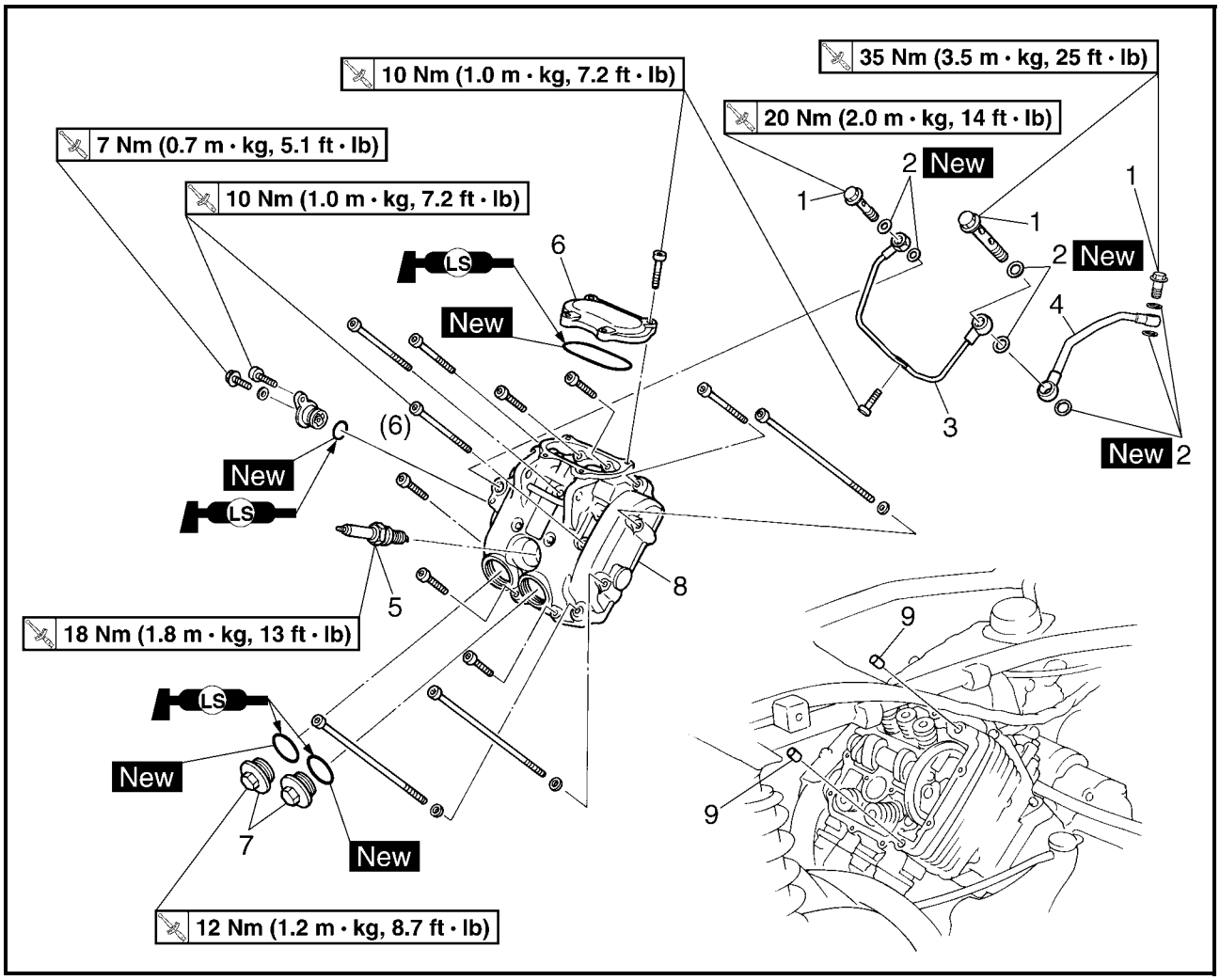

Order	Job name/Part name	Q'ty	Remarks
	Removing the cylinder head cover		Remove the parts in the order below.
	Seat/front fender		Refer to "SEAT, CARRIERS, FENDERS AND FUEL TANK" in CHAPTER 3.
	Fuel tank/plastic cover		
	Recoil starter/timing plug		Refer to "ADJUSTING THE VALVE CLEARANCE" in CHAPTER 3.
	Select lever unit		Refer to "ENGINE REMOVAL".
1	Union bolt	3	
2	Copper washer	7	
3	Oil delivery pipe 3	1	
4	Oil delivery pipe 2	1	
5	Spark plug	1	
6	Tappet cover (intake)	1	
7	Tappet cover (exhaust)	2	

Downloaded from www.Manualslib.com manuals search engine

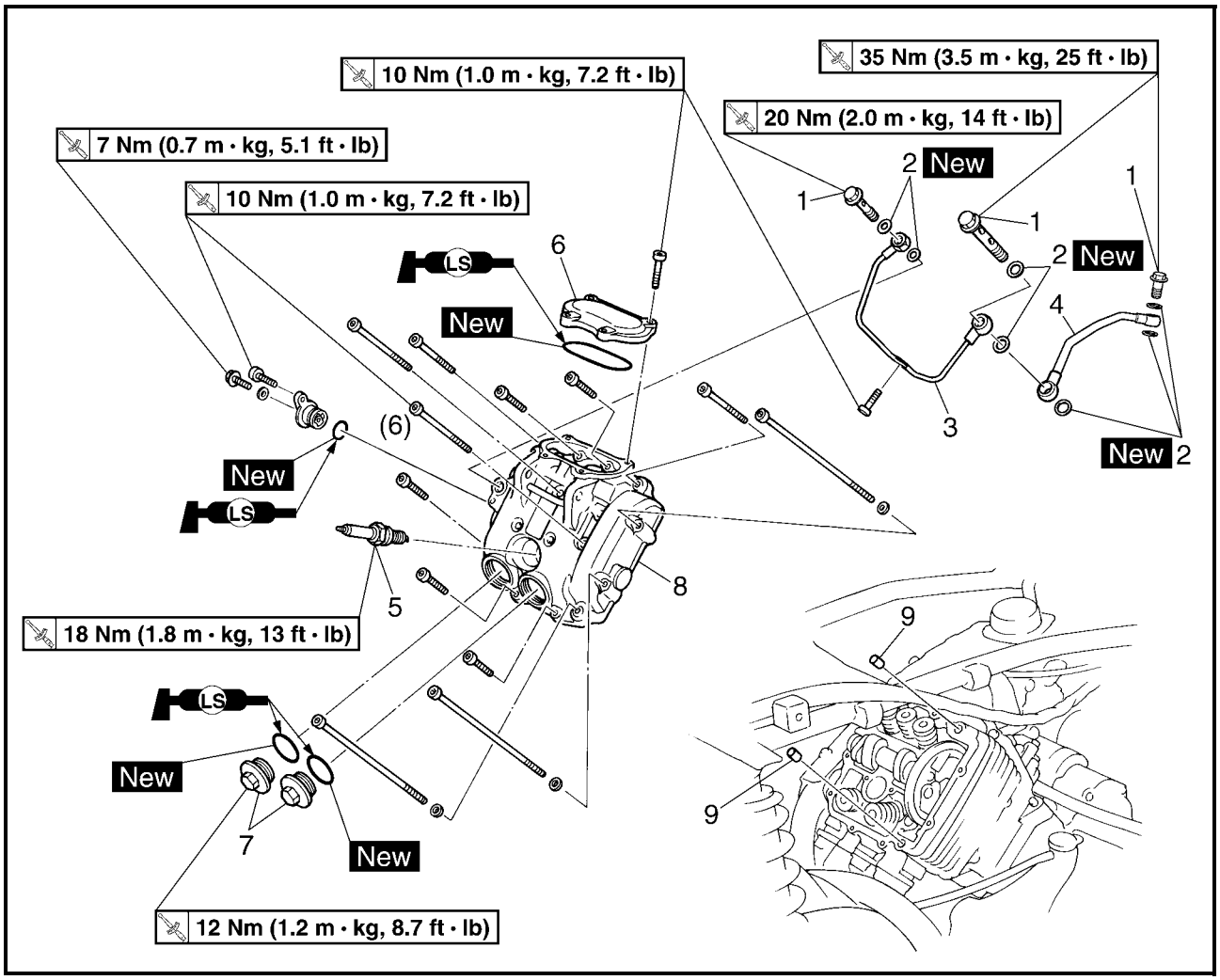

Order	Job name/Part name	Q'ty	Remarks
8	Cylinder head cover	1	Refer to "REMOVING/INSTALLING THE CYLINDER HEAD COVER".
9	Dowel pin	2	For installation, reverse the removal procedure.

Downloaded from www.Manualslib.com manuals search engine

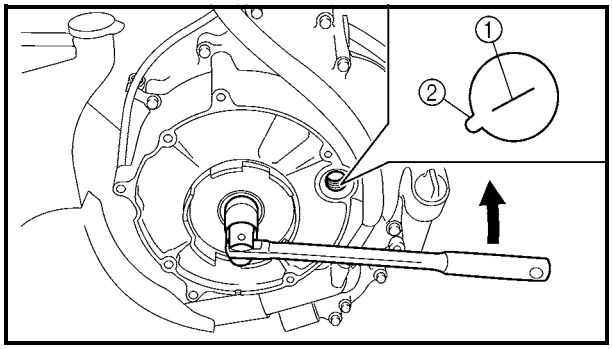

REMOVING THE CYLINDER HEAD COVER

1.Align:
- "I" mark
  (with stationary pointer)

****

Checking steps:
- Turn the crankshaft counterclockwise with a wrench.
- Align the "I" mark ① on the rotor with the stationary pointer ② on the crankcase cover. When the "I" mark is aligned with the stationary pointer, the piston is at the Top Dead Center (T.D.C.).

NOTE:
- When the piston is at the top dead center (T.D.C.) on the compression stroke, there should be clearance between the valve stem tips and their respective rocker arm adjusting screws.
- If there is no clearance, rotate the crankshaft counterclockwise one turn.

****

2.Remove:
- Cylinder head cover

NOTE:
Loosen each bolt 1/4 of a turn at a time, in stages and in a crisscross pattern. After all the bolts are loosened, remove them.

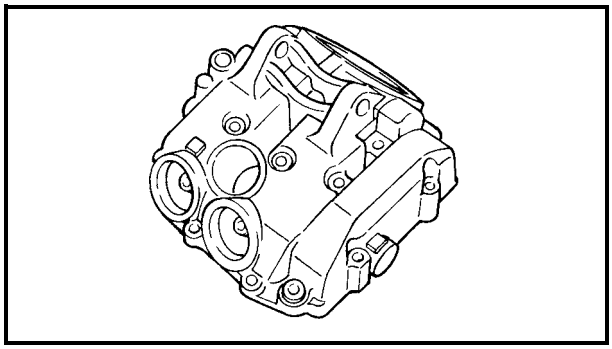

CHECKING THE CYLINDER HEAD COVER

1.Check:
- Cylinder head cover
  Cracks/damage → Replace the cylinder head cover and cylinder head as a set.

Downloaded from www.Manualslib.com manuals search engine

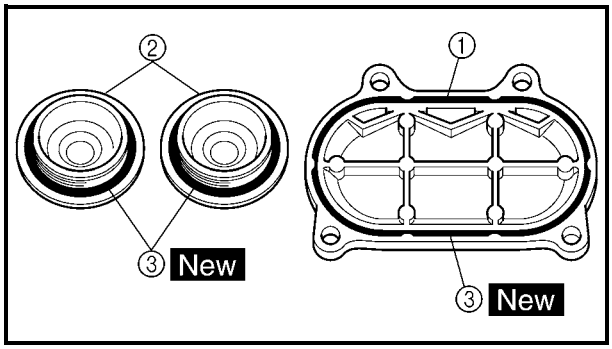

CHECKING THE TAPPET COVER

1.Check:
- Tappet cover (intake) ①
- Tappet cover (exhaust) ②
  Cracks/damage → Replace.
- O-ring ③ New

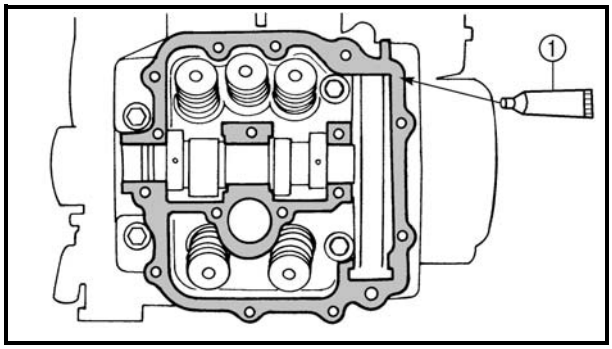

INSTALLING THE CYLINDER HEAD COVER

1.Apply:
- Sealant (Quick Gasket®) ①
  (to the mating surfaces of the cylinder head and cylinder head cover)

Sealant (Quick Gasket®) ①:
P/N. ACC-11001-05-01
Yamaha bond No. 1215:
P/N. 90890-85505

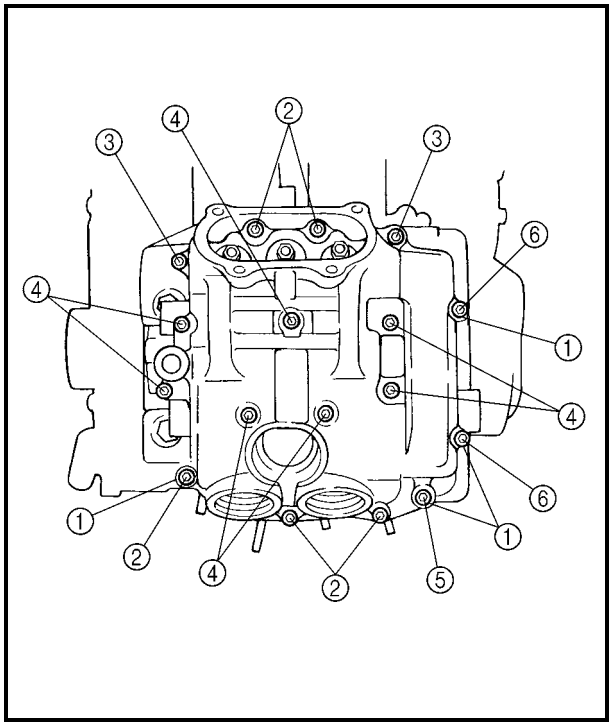

2.Install:
- Cylinder head cover
- Washers ①
- Bolts **10 Nm (1.0 m • kg, 7.2 ft • lb)**

② Bolt: ℓ = 25 mm
③ Bolt: ℓ = 40 mm
④ Bolt: ℓ = 55 mm
⑤ Bolt: ℓ = 115 mm
⑥ Bolt: ℓ = 130 mm

NOTE:
Tighten the cylinder head cover bolts in stages, using a crisscross pattern.

Downloaded from www.Manualslib.com manuals search engine

ROCKER ARMS

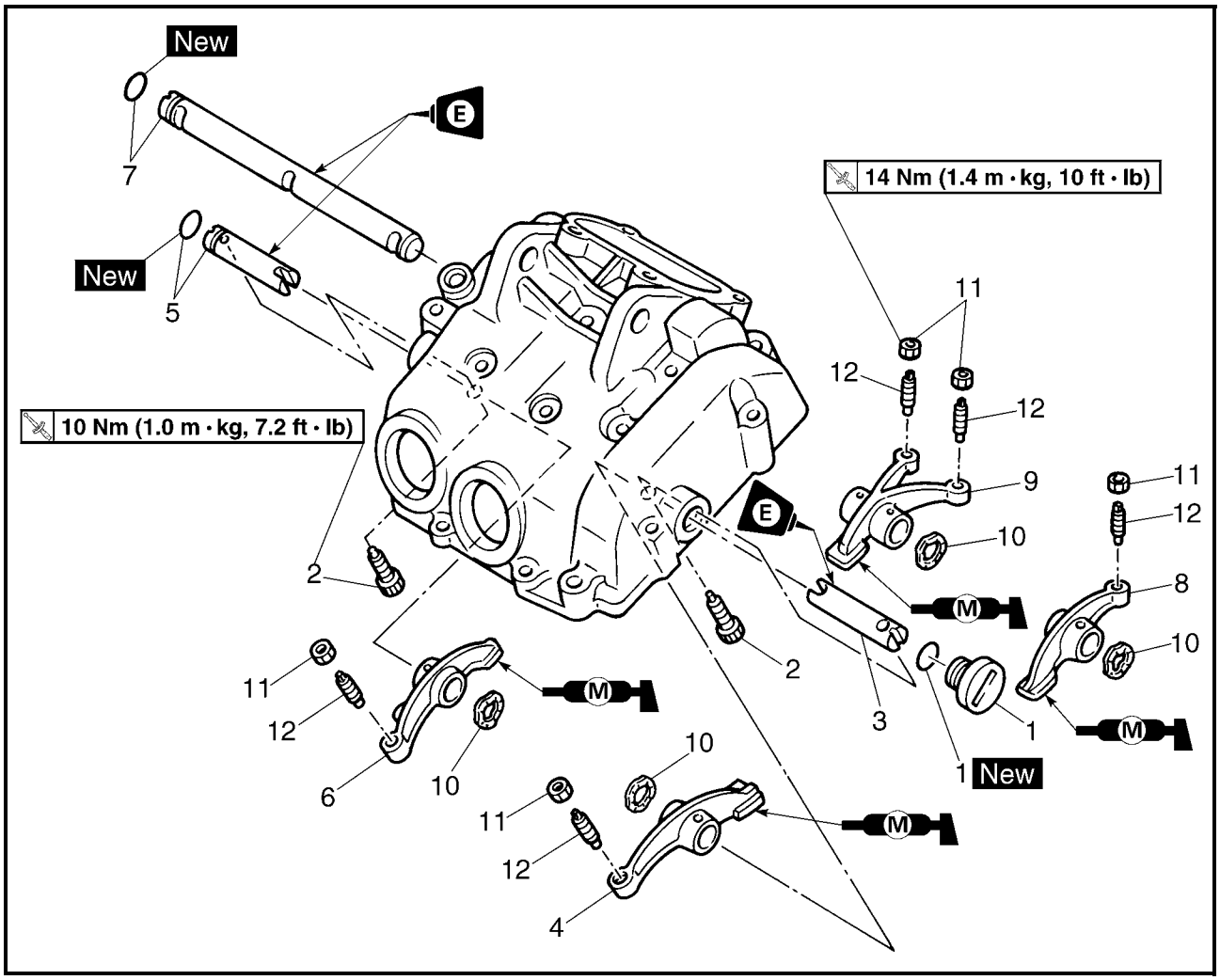

Order	Job name/Part name	Q'ty	Remarks
	Removing the rocker arm		Remove the parts in the order below.
	Cylinder head cover		Refer to "CYLINDER HEAD COVER".
1	Plug/O-ring	1/1	
2	Bolt	2	
3	Rocker arm shaft 2	1	Refer to "REMOVING/INSTALLING THE ROCKER ARM".
4	Rocker arm 3	1	
5	Rocker arm shaft 3/O-ring	1/1	
6	Rocker arm 4	1	
7	Rocker arm shaft 1/O-ring	1/1	
8	Rocker arm 1	1	
9	Rocker arm 2	1	

Downloaded from www.Manualslib.com manuals search engine

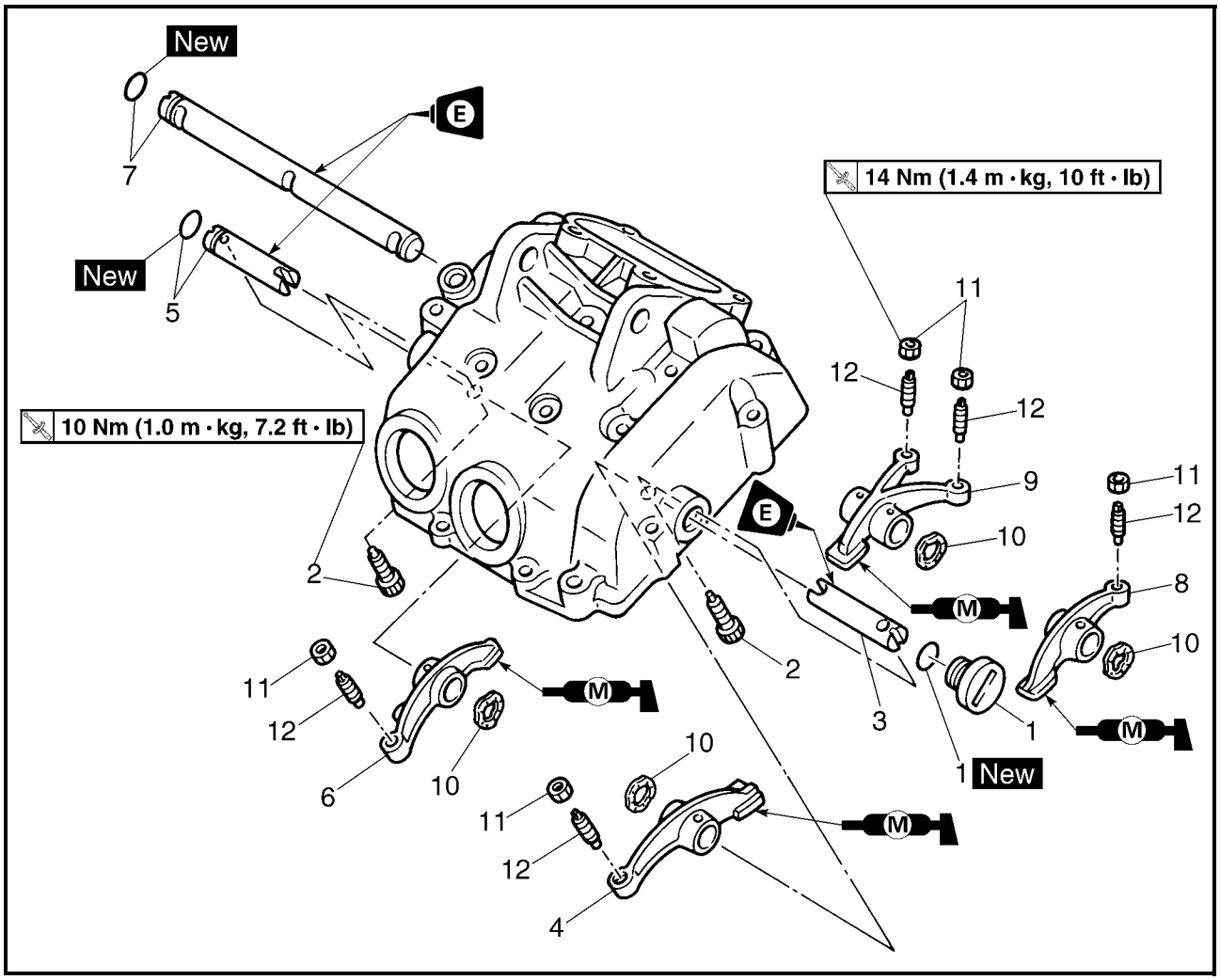

Order	Job name/Part name	Q'ty	Remarks
10	Spring	4	
11	Locknut	5	
12	Valve adjuster	5	
			For installation, reverse the removal procedure.

Downloaded from www.Manualslib.com manuals search engine

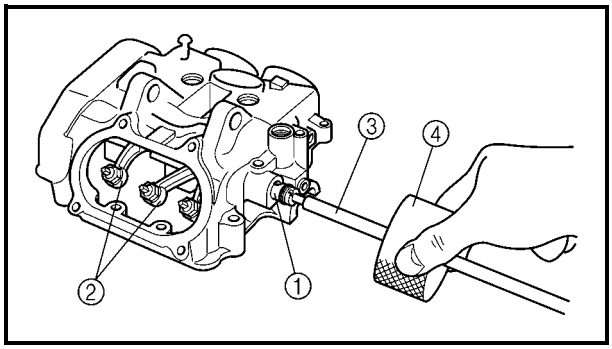

REMOVING THE ROCKER ARM

1.Remove:
- Rocker arm shafts ①
- Rocker arms ②

NOTE:
Use a slide hammer bolt ③ and weight ④ to remove the rocker arm shafts.

Slide hammer set:
P/N. YU-01083-A
Slide hammer bolt (M6):
P/N. 90890-01083
Weight:
P/N. 90890-01084

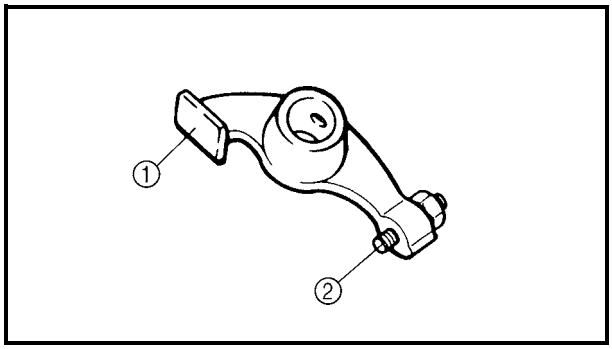

CHECKING THE ROCKER ARM

1.Check:
- Rocker arm lobes ①
- Valve adjusters ②
  Blue discoloration/pitting/scratches → Replace.

2.Check:
- Rocker arms
- Rocker arm shafts
  Damage/wear → Replace.

****

Checking steps:
- Check the two contact areas on the rocker arms for signs of abnormal wear.
  1) Rocker arm shaft hole.
  2) Camshaft lobe contact surface.
  Excessive wear → Replace.
- Check the surface of the rocker arm shafts.
  Blue discoloration/pitting/scratches → Replace/check lubrication.
- Measure the inside diameter ⓐ of the rocker arm holes.
  Out of specification → Replace.

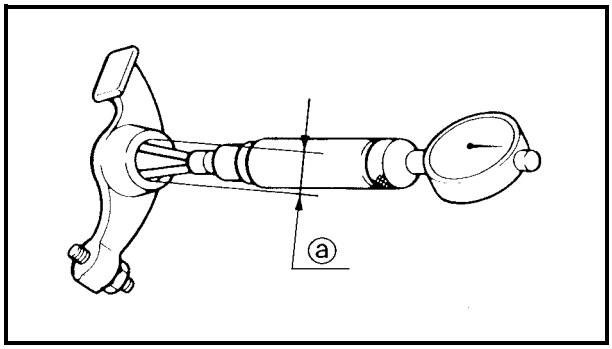

Rocker arm inside diameter:
12.000 ~ 12.018 mm
(0.4724 ~ 0.4731 in)

Downloaded from www.Manualslib.com manuals search engine

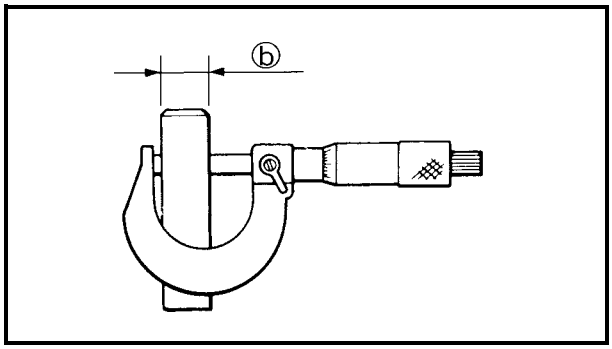

- Measure the outside diameter ⓑ of the rocker arm shafts.
  Out of specification → Replace.

Rocker arm shaft outside diameter:
11.976 ~ 11.991 mm
(0.4715 ~ 0.4721 in)

- Calculate the clearance by subtracting the rocker arm shaft outside diameter from the rocker arm inside diameter.
  Clearance greater than 0.08 mm (0.003 in) → Replace the defective part(s).

Rocker arm to shaft standard clearance:
0.009 ~ 0.042 mm
(0.0004 ~ 0.0017 in)

****

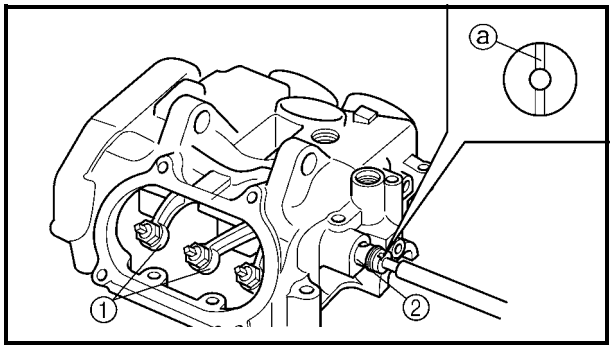

INSTALLING THE ROCKER ARM

1.Apply:
- Engine oil
  (onto the rocker arm shafts)

2.Install:
- Rocker arms ①
- Rocker arm shafts ②

NOTE:
- The thread hole ⓐ of the rocker arm shaft must face to the outside.
- After installation, make sure that the thread hole ⓐ of the rocker arm shaft is positioned correctly, as shown in the illustration.

Downloaded from www.Manualslib.com manuals search engine

CAMSHAFT AND CYLINDER HEAD

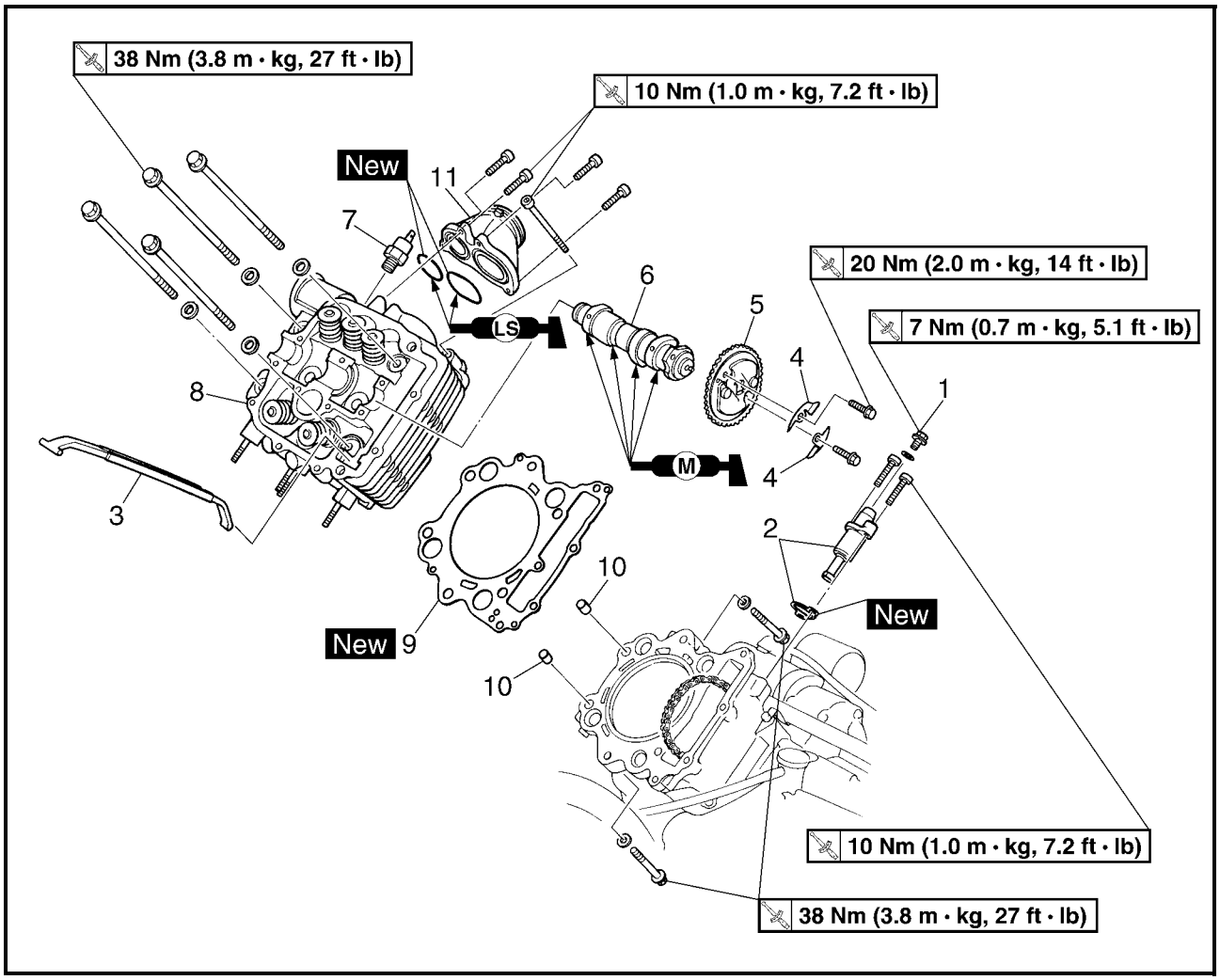

Order	Job name/Part name	Q'ty	Remarks
	Removing the camshaft and cylinder head		Remove the parts in the order below.
	Seat/front fender		Refer to "SEAT, FENDERS AND FUEL TANK" in CHAPTER 3.
	Fuel tank/plastic covers		
	Carburetors		Refer to "CARBURETOR" in CHAPTER 6.
	Thermostat		Refer to "THERMOSTAT" in CHAPTER 5.
	Thermostat assembly breather hose		Refer to "WATER PUMP" in CHAPTER 5.
	Muffler/exhaust pipe		Refer to "ENGINE REMOVAL".
	Thermo switch lead		Refer to "HOSES AND LEADS".
	Cylinder head cover		Refer to "CYLINDER HEAD COVER".
1	Timing chain tensioner cap bolt	1	Refer to "REMOVING/INSTALLING THE CAMSHAFT AND CYLINDER HEAD".
2	Timing chain tensioner/gasket	1/1	
3	Timing chain guide (exhaust)	1	
4	Decompressor cam guide plate	2	
5	Camshaft sprocket	1	

Downloaded from www.Manualslib.com manuals search engine

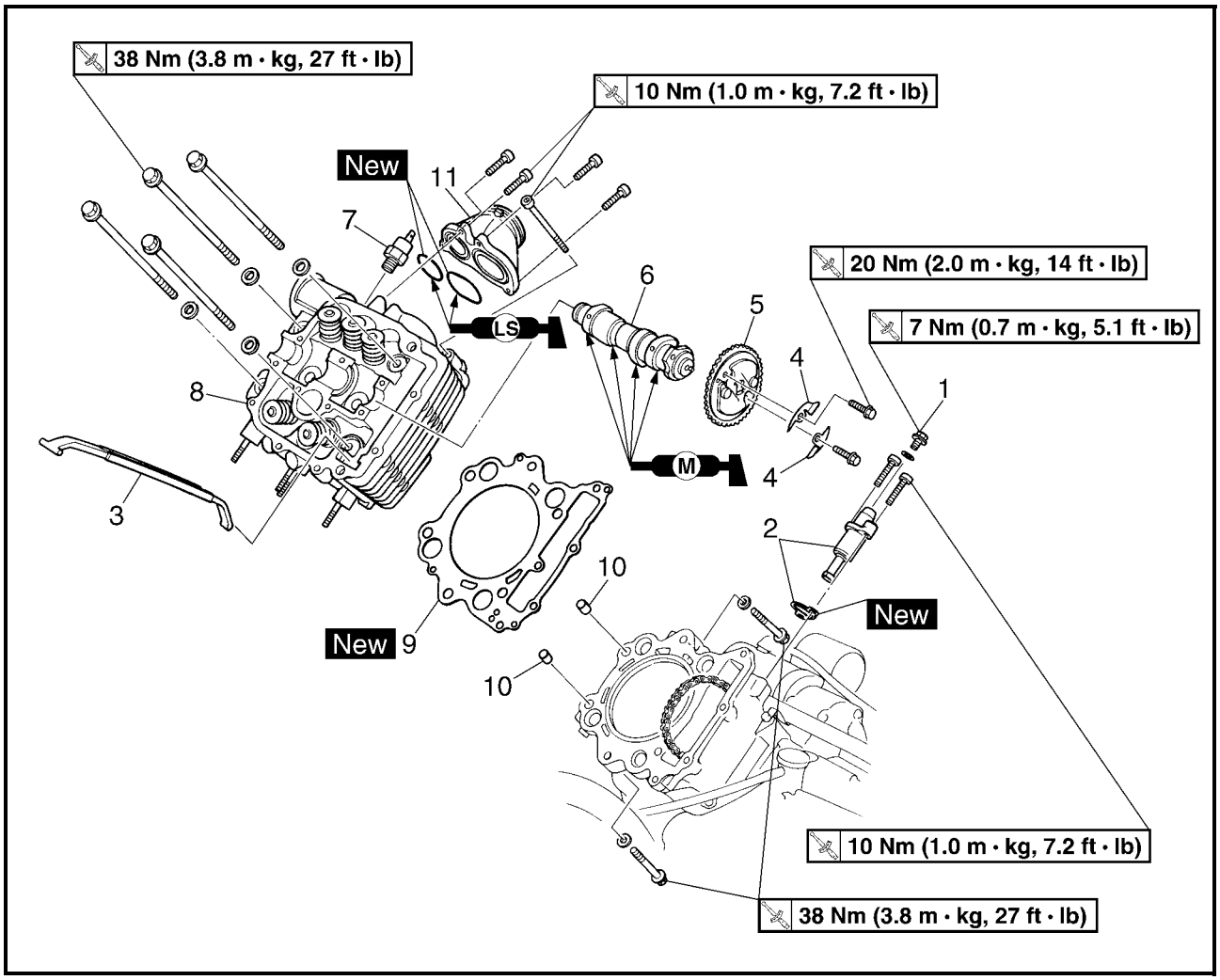

Order	Job name/Part name	Q'ty	Remarks
6	Camshaft	1	
7	Thermo switch	1	
8	Cylinder head	1	
9	Cylinder head gasket	1	
10	Dowel pin	2	
11	Carburetor joint	1	
			For installation, reverse the removal procedure.

Downloaded from www.Manualslib.com manuals search engine

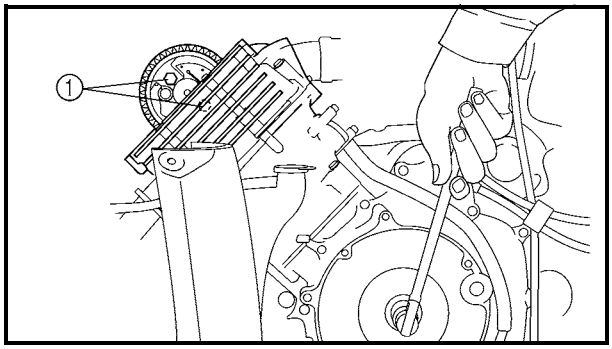

REMOVING THE CAMSHAFT AND CYLINDER HEAD

1.Loosen:
- Camshaft sprocket bolts ①

2.Loosen:
- Timing chain tensioner cap bolt

3.Remove:
- Timing chain tensioner
- Timing chain guide (exhaust)
- Decompressor cam guide plates
- Camshaft sprocket
- Camshaft

NOTE:
- Fasten a safety wire to the timing chain to prevent it from falling into the crankcase.
- When removing the camshaft sprocket, it is not necessary to separate the timing chain.

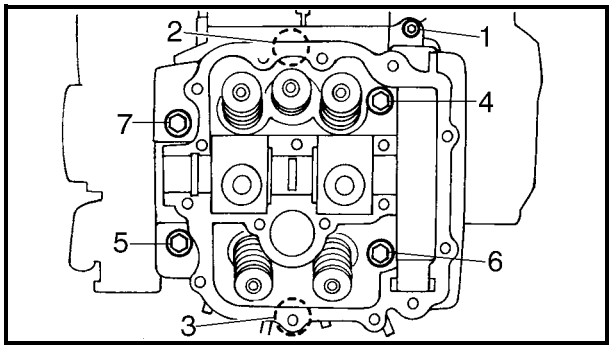

4.Remove:
- Cylinder head

NOTE:
- Loosen the bolts in the proper sequence.
- Follow the numerical order shown in the illustration. Loosen each bolt 1/4 of a turn at a time until all of the bolts are loose.

Downloaded from www.Manualslib.com manuals search engine

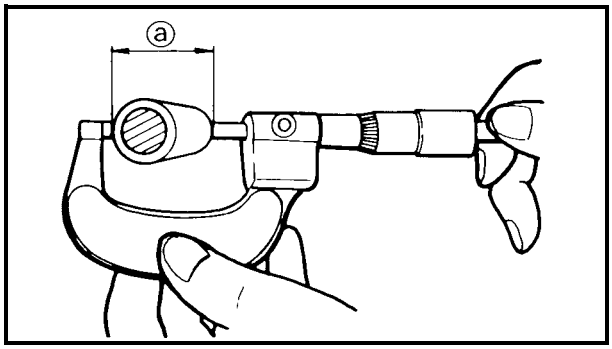

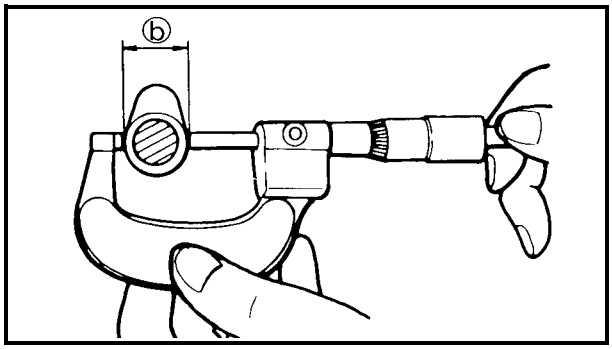

CHECKING THE CAMSHAFT

1.Check:
- Cam lobes
  Pitting/scratches/blue discoloration → Replace.

2.Measure:
- Cam lobes length ⓐ and ⓑ.
  Out of specification → Replace.

Camshaft lobe limit:
Intake:
ⓐ 35.59 mm (1.4012 in)
ⓑ 29.96 mm (1.1795 in)
Exhaust:
ⓐ 36.40 mm (1.4331 in)
ⓑ 30.01 mm (1.1815 in)

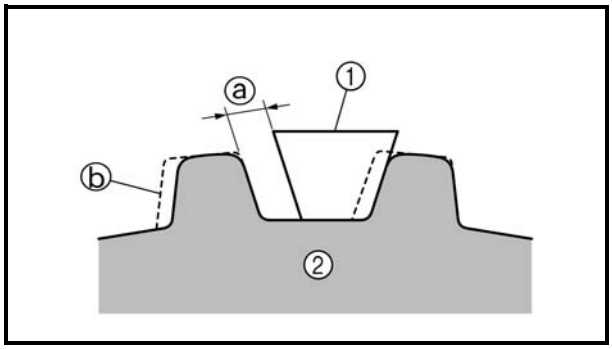

CHECKING THE CAMSHAFT SPROCKET

1.Check:
- Camshaft sprocket
  Wear/damage → Replace the camshaft sprocket and timing chain as a set.

ⓐ 1/4 of a tooth
ⓑ Correct
① Timing chain
② Sprocket

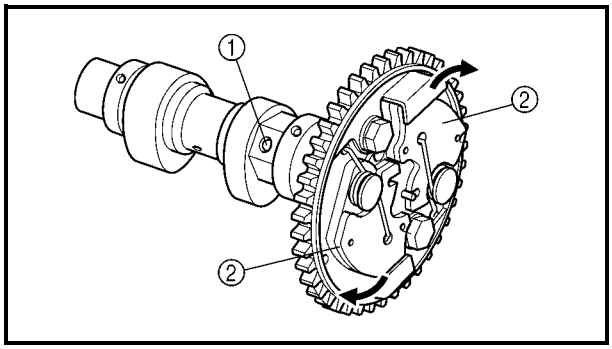

CHECKING THE DECOMPRESSION SYSTEM

1.Check:
- Decompression system

****

Checking steps:
Check while the camshaft sprocket is installed on the camshaft.
- Check that the decompressor lever pin ① projects from the camshaft.
- Check that the decompressor cam ② moves smoothly.

****

Downloaded from www.Manualslib.com manuals search engine

CHECKING THE TIMING CHAIN GUIDE

1.Check:
- Exhaust side timing chain guide
  Wear/damage → Replace.

CHECKING THE TIMING CHAIN TENSIONER

1.Check:
- Timing chain tensioner
  Cracks/damage/rough movement → Replace.

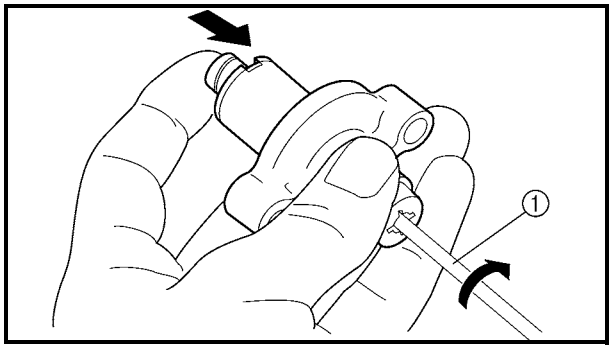

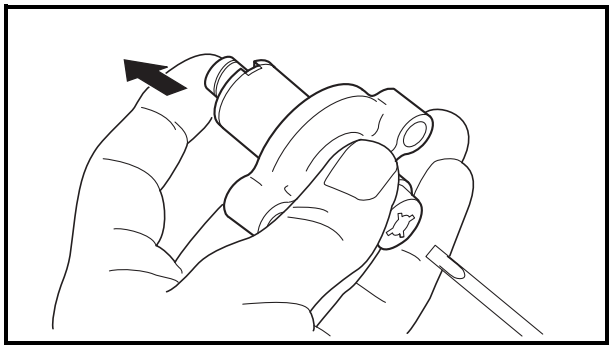

****

a.Lightly press the timing chain tensioner rod into the timing chain tensioner housing by hand.

NOTE:
While pressing the timing chain tensioner rod, wind it clockwise with a thin screwdriver ① until it stops.

b.Removing the screwdriver and slowly release the timing chain tensioner rod.

c.Make sure that the timing chain tensioner rod comes out of the timing chain tensioner housing smoothly. If there is rough movement, replace the timing chain tensioner.

****

CHECKING THE CYLINDER HEAD

1.Eliminate:
- Carbon deposits (from the combustion chambers)
  Use a rounded scraper.

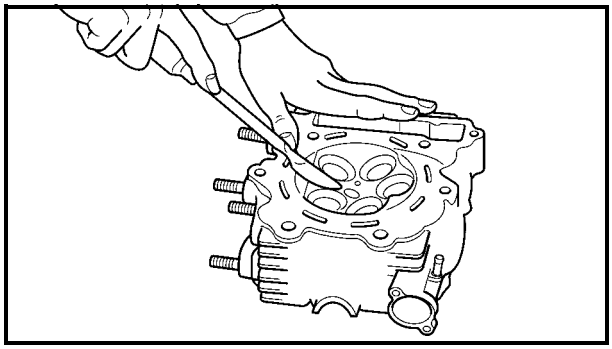

NOTE:
Do not use a sharp instrument to avoid damaging or scratching:
- Spark plug threads
- Valve seats

2.Check:
- Cylinder head
  Scratches/damage → Replace the cylinder head cover and cylinder head as a set.
- Cylinder head water jacket
  Mineral deposits/rust → Eliminate.

Downloaded from www.Manualslib.com manuals search engine

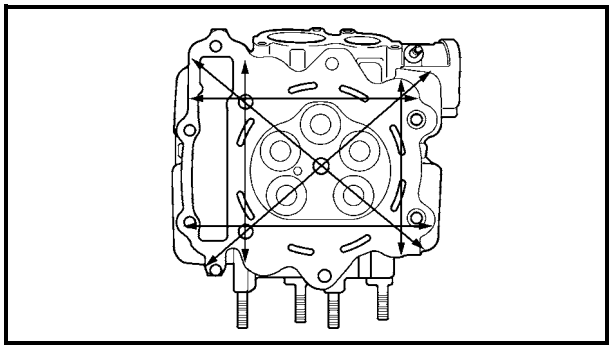

3.Measure:
- Cylinder head warpage
  Out of specification → Resurface.

	Cylinder head warpage: Less than 0.05 mm (0.002 in)

****

Measurement and resurfacing steps:
- Place a straightedge and a feeler gauge across the cylinder head.
- Use a feeler gauge to measure the warpage.
- If the warpage is out of specification, resurface the cylinder head.
- Place a 400 ~ 600 grit wet sandpaper on the surface plate, and resurface the head using a figure-eight sanding pattern.

NOTE:
To ensure an even surface rotate the cylinder head several times.

****

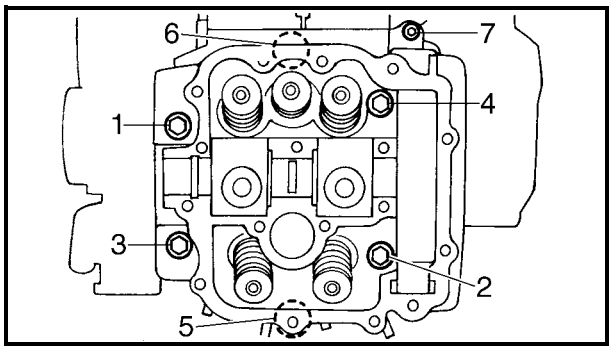

INSTALLING THE CAMSHAFT AND CYLINDER HEAD

1.Install:
- Cylinder head
- Bolts (M9 : 1 ~ 6) **38 Nm (3.8 m • kg, 27 ft • lb)**
- Bolt (M6 : 7) **10 Nm (1.0 m • kg, 7.2 ft • lb)**

NOTE:
- Tighten the bolts in the proper sequence.
- Follow the numerical order shown in the illustration. Tighten the bolts in two stages.

Downloaded from www.Manualslib.com manuals search engine

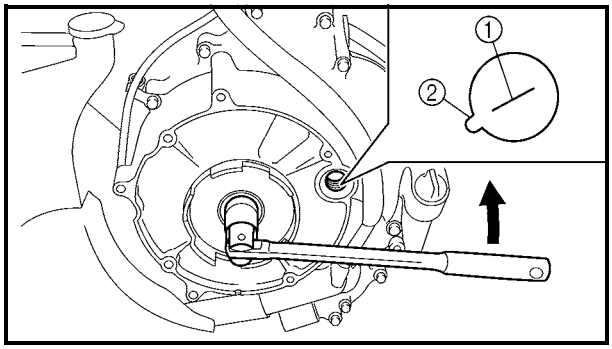

2.Install:
- Camshaft
- Camshaft sprocket

****

Installation steps:

- Turn the crankshaft counterclockwise with a wrench.
- Align the "I" mark ① on the rotor with the stationary pointer ② on the crankcase cover. When the "I" mark is aligned with the stationary pointer, the piston is at the Top Dead Center (T.D.C.).

CAUTION:

Do not turn the crankshaft during the camshaft installation.

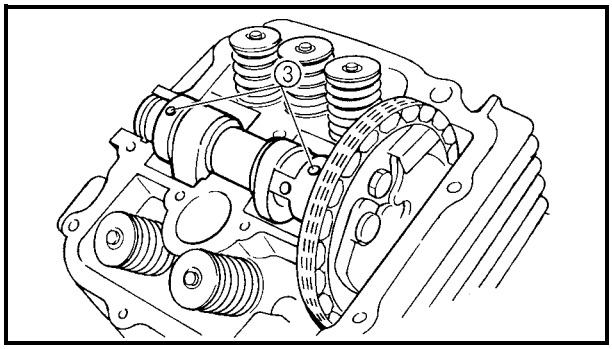

- Temporarily install the camshaft sprocket on the camshaft. (Do not install the bolts.) Then, install the timing chain on the camshaft sprocket.

NOTE:

Make sure the small holes ③ on the camshaft face upward.

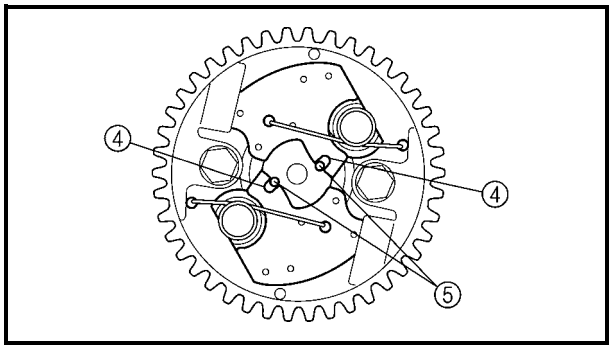

- Align the notches ④ on the decompressor cams with the projections ⑤ on the decompressor spring lever, then install the camshaft sprocket on the camshaft.

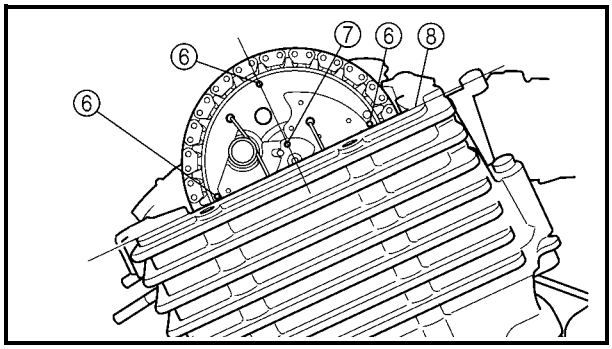

NOTE:

Check that each part is positioned as shown in the illustration.

⑥ Small holes on camshaft sprocket
⑦ Punch mark on decompressor spring lever
⑧ Top front of cylinder head

Downloaded from www.Manualslib.com manuals search engine

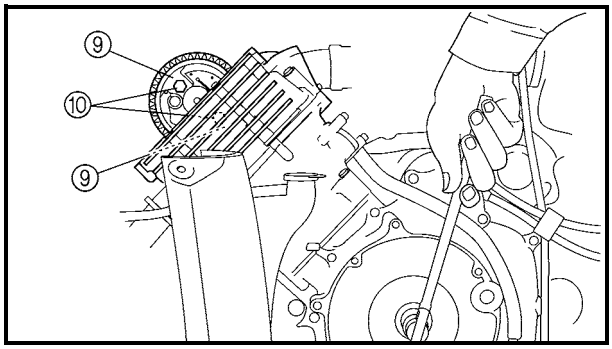

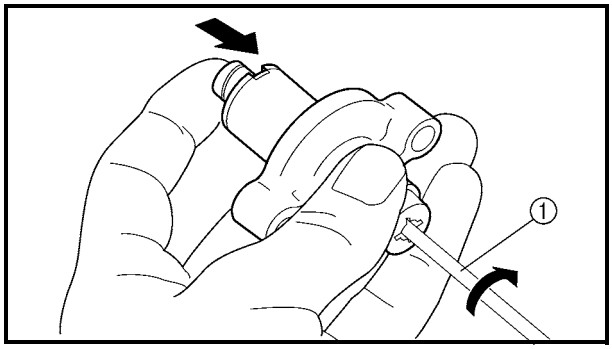

- Install the decompressor cam guide plates ⑨ and camshaft sprocket bolts ⑩.

	Camshaft sprocket bolt: **20 Nm (2.0 m • kg, 14 ft • lb)**

NOTE:
Insert a screwdriver into the timing chain tensioner hole and push the timing chain guide inward.

- Remove the retaining wire.

****

3.Install:
- Timing chain guide

4.Install:
- Timing chain tensioner

****

Installation steps:

a.Lightly press the timing chain tensioner rod into the timing chain tensioner housing by hand.

b.While pressing the timing chain tensioner rod, wind it clockwise with a thin screwdriver ① until it stops.

c.With the screwdriver still inserted into the timing chain tensioner, install the timing chain tensioner and gasket onto the cylinder block. Then, tighten the timing chain tensioner bolts to the specified torque.

⚠ WARNING
Always use a new gasket.

NOTE:
The "UP" mark on the timing chain tensioner should face up.

	Timing chain tensioner bolt **10 Nm (1.0 m • kg, 7.2 ft • lb)**

d.Remove the screwdriver, make sure that the timing chain tensioner rod releases, and tighten the cap bolt to the specified torque.

	Timing chain tensioner cap bolt **7 Nm (0.7 m • kg, 5.7 ft • lb)**

****

5.Check:
- Small holes on camshaft sprocket
- Rotor "I" mark
  Out of alignment → Adjust.

Downloaded from www.Manualslib.com manuals search engine

VALVES AND VALVE SPRINGS

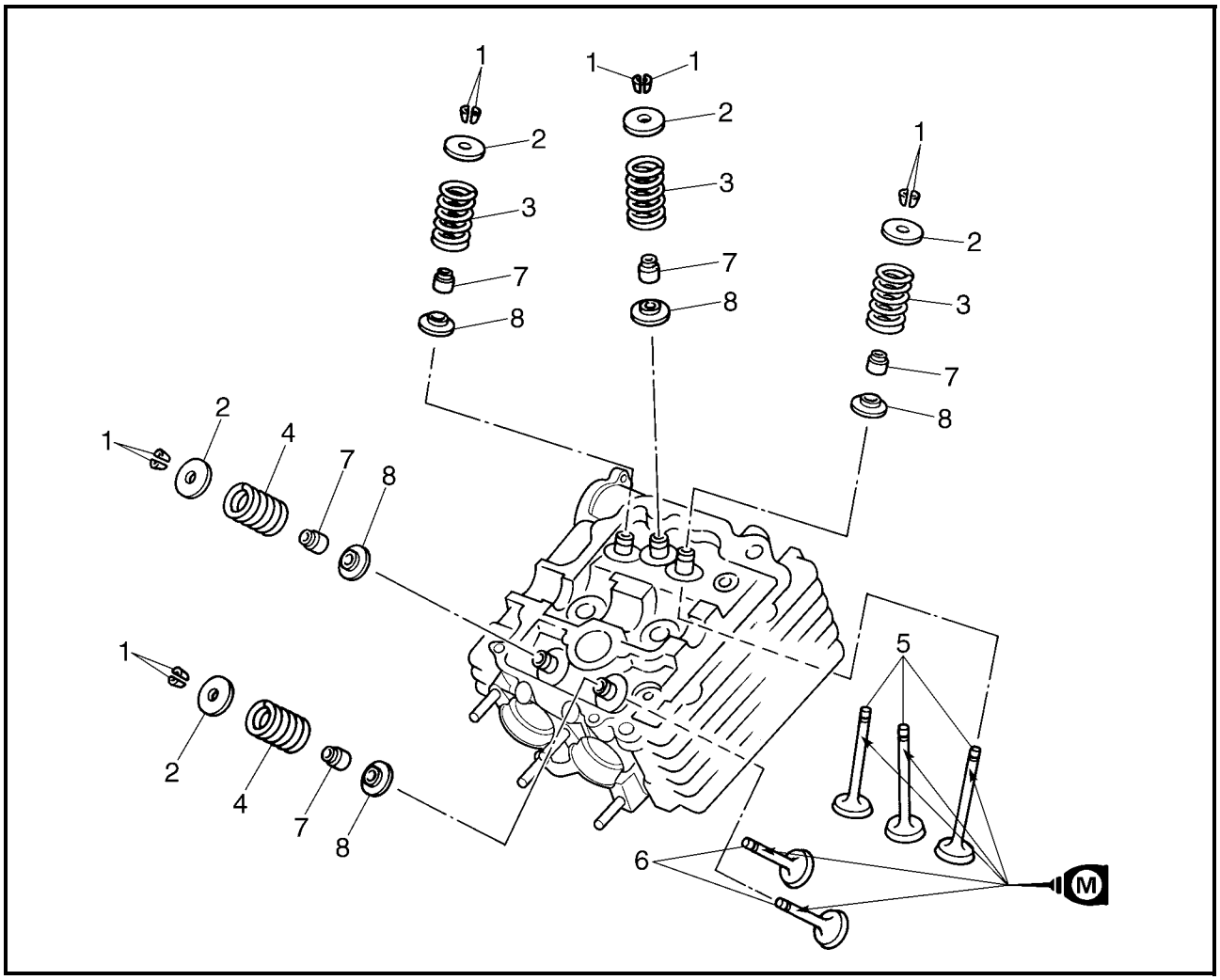

Order	Job name/Part name	Q'ty	Remarks
	Removing the valve and valve spring		Remove the parts in the order below.
	Cylinder head		Refer to "CAMSHAFT AND CYLINDER HEAD".
1	Valve cotter	10	Refer to "REMOVING/INSTALLING THE VALVE AND VALVE SPRING".
2	Valve spring retainer	5	
3	Intake valve spring	3	
4	Exhaust valve spring	2	
5	Intake valve	3	
6	Exhaust valve	2	
7	Valve stem seal	5	
8	Valve spring seat	5	
			For installation, reverse the removal procedure.

Downloaded from www.Manualslib.com manuals search engine

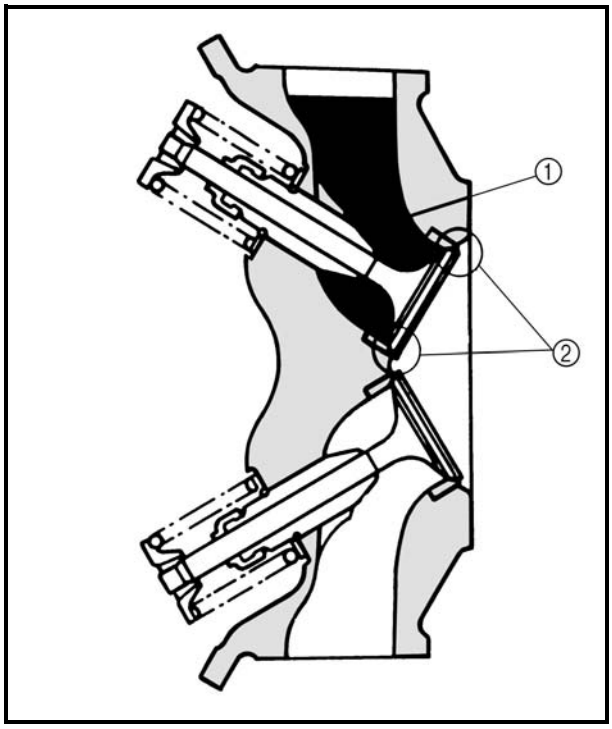

REMOVING THE VALVE AND VALVE SPRING

1.Check:

- Valve sealing
  Leakage at the valve seat → Inspect the valve face, valve seat and valve seat width.
  Refer to “CHECKING THE VALVE AND VALVE SPRING”.

****

Checking steps:

- Pour a clean solvent ① into the intake and exhaust ports.
- Check that the valve seals properly.
  There should be no leakage at the valve seat ②.

****

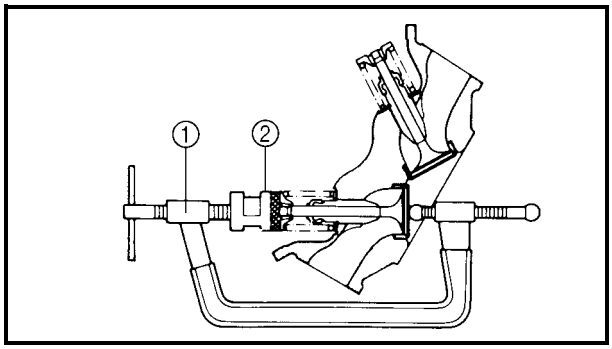

2.Remove:

- Valve cotters

NOTE:

Attach a valve spring compressor ① and valve spring compressor attachment ② between the valve spring retainer and the cylinder head to remove the valve cotters.

Valve spring compressor:
P/N. YM-04019, 90890-04019
Valve spring compressor attachment:
P/N. 90890-01243

Downloaded from www.Manualslib.com manuals search engine

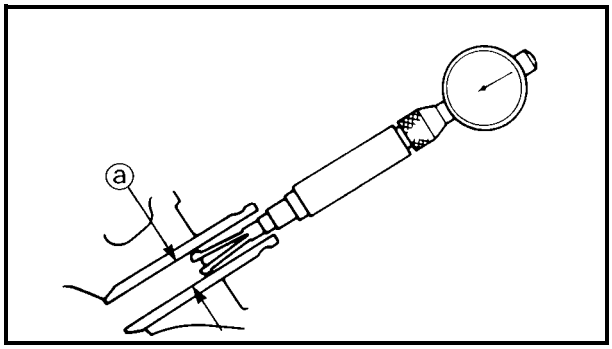

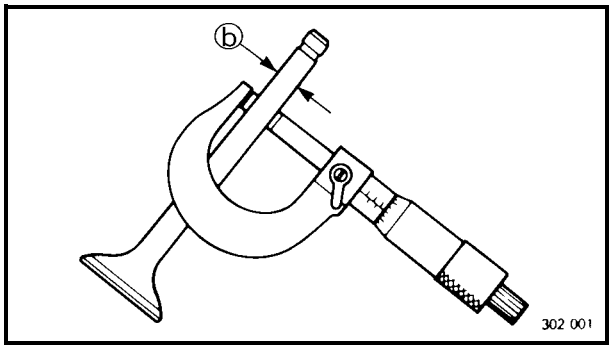

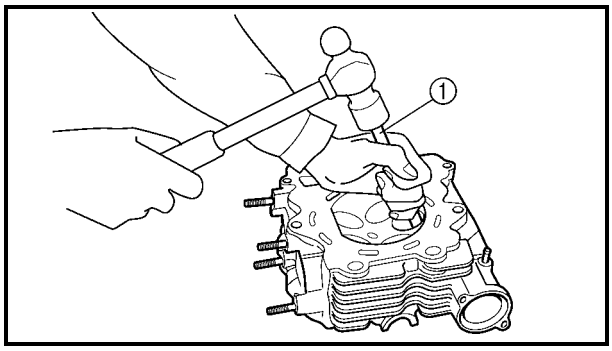

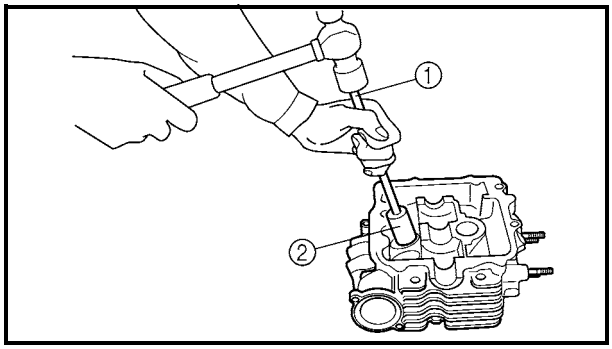

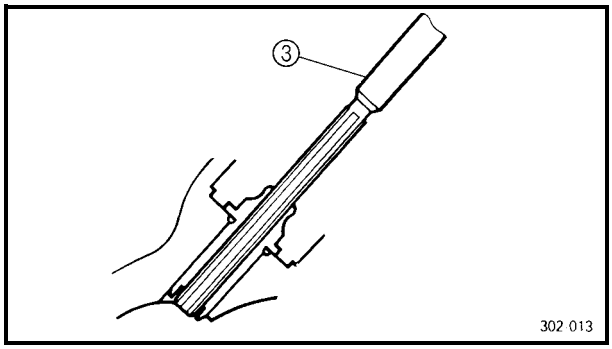

CHECKING THE VALVE AND VALVE SPRING

1.Measure:

- Stem-to-guide clearance

Stem-to-guide clearance =
valve guide inside diameter ⓐ –
valve stem diameter ⓑ

Out of specification → Replace the valve guide.

Clearance (stem to guide):
Intake:
0.010 ~ 0.037 mm
(0.0004 ~ 0.0015 in)
<Limit>: 0.08 mm (0.0031 in)
Exhaust:
0.025 ~ 0.052 mm
(0.0010 ~ 0.0020 in)
<Limit>: 0.10 mm (0.0039 in)

2.Replace:

- Valve guide

****

Replacement steps:

NOTE:
To ease guide removal, installation and to maintain correct fit, heat the cylinder head to 100 °C (212 °F) in an oven.

- Remove the valve guide using a valve guide remover ①.
- Install the new valve guide using a valve guide remover ① and valve guide installer ②.
- After installing the valve guide, bore the valve guide using a valve guide reamer ③ to obtain proper stem-to-guide clearance.

Valve guide remover (ø 6):
P/N. YM-4064-A, 90890-04064
Valve guide installer (ø 6):
P/N. YM-04065-A, 90890-04065
Valve guide reamer (ø 6):
P/N. YM-04066, 90890-04066

NOTE:
After replacing the valve guide reface the valve seat.

****

Downloaded from www.Manualslib.com manuals search engine

3.Check:
- Valve face
  Pitting/wear → Grind the face.
- Valve stem end
  Mushroom shape or diameter larger than the body of the stem → Replace.

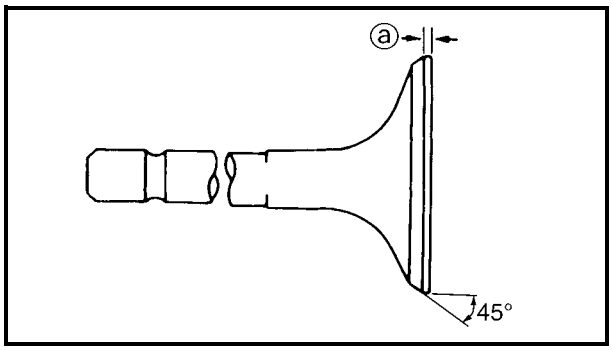

4.Measure:
- Margin thickness ⓐ
  Out of specification → Replace.

Margin thickness:
Intake:
0.85 ~ 1.15 mm
(0.0335 ~ 0.0452 in)
Exhaust:
0.85 ~ 1.15 mm
(0.0335 ~ 0.0452 in)

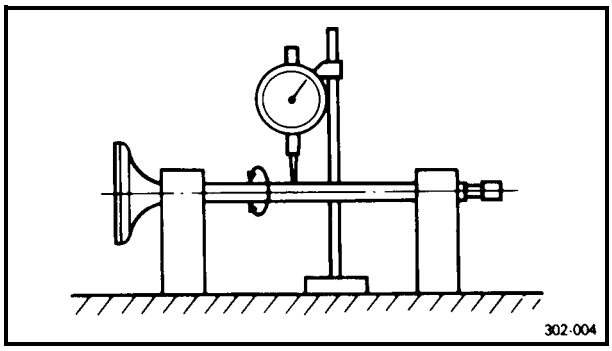

5.Measure:
- Runout (valve stem)
  Out of specification → Replace.

Runout limit:
0.01 mm (0.0004 in)

NOTE:
- When installing a new valve always replace the guide.
- If the valve is removed or replaced always replace the oil seal.

6.Eliminate:
- Carbon deposits
  (from the valve face and valve seat)

7.Check:
- Valve seats
  Pitting/wear → Reface the valve seat.

Downloaded from www.Manualslib.com manuals search engine

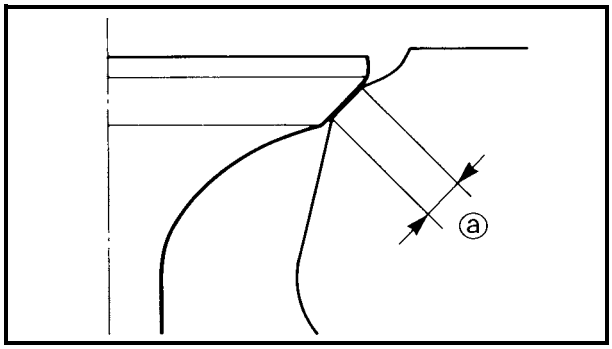

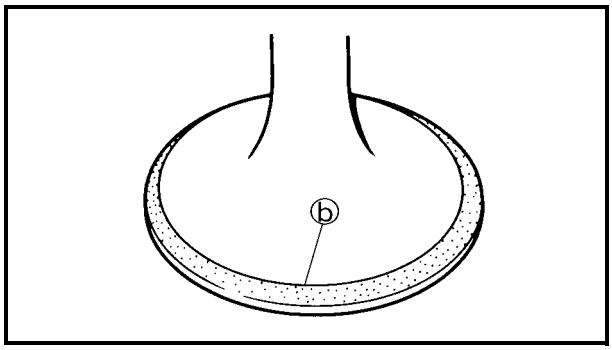

8.Measure:
- Valve seat width ⓐ
  Out of specification → Reface the valve seat.

Valve seat width:
Intake:
0.9 ~ 1.1 mm
(0.0354 ~ 0.0433 in)
<Limit>: 1.6 mm (0.0630 in)
Exhaust:
0.9 ~ 1.1 mm
(0.0354 ~ 0.0433 in)
<Limit>: 1.6 mm (0.0630 in)

****

Measurement steps:
- Apply Mechanic's blueing dye (Dykem) ⓑ to the valve face.
- Install the valve into the cylinder head.
- Press the valve through the valve guide and onto the valve seat to make a clear pattern.
- Measure the valve seat width. Where the valve seat and valve face made contact, blueing will have been removed.
- If the valve seat is too wide, too narrow, or the seat is not centered, the valve seat must be refaced.

****

9.Lap:
- Valve face
- Valve seat

NOTE:
After refacing the valve seat or replacing the valve and valve guide, the valve seat and valve face should be lapped.

****

Lapping steps:
- Apply a coarse lapping compound to the valve face.

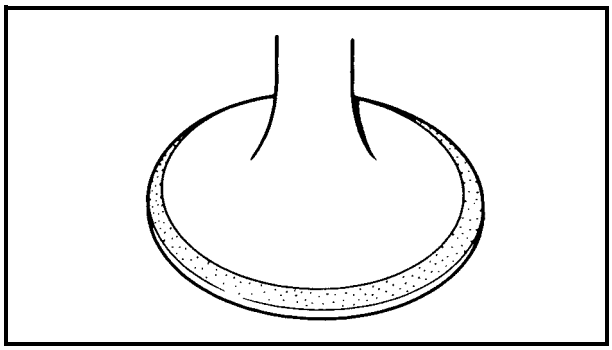

CAUTION:
Do not let the compound enter the gap between the valve stem and the guide.

- Apply molybdenum disulfide oil to the valve stem.

Downloaded from www.Manualslib.com manuals search engine

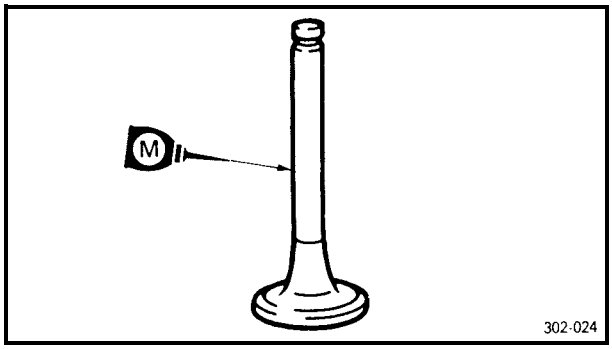

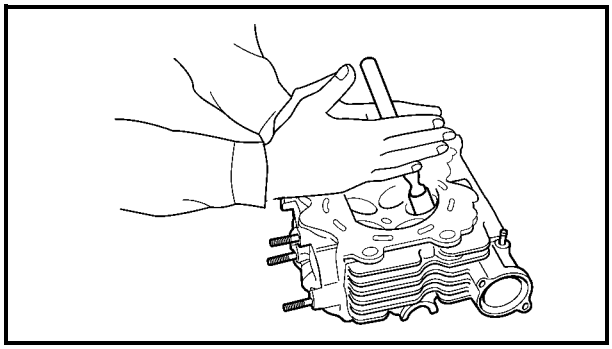

- Install the valve into the cylinder head.
- Turn the valve until the valve face and valve seat are evenly polished, then clean off all of the compound.

NOTE:
For best lapping results, lightly tap the valve seat while rotating the valve back and forth between your hands.

- Apply a fine lapping compound to the valve face and repeat the above steps.

NOTE:
After every lapping operation be sure to clean off all of the compound from the valve face and valve seat.

- Apply Mechanic's blueing dye (Dykem) to the valve face.
- Install the valve into the cylinder head.
- Press the valve through the valve guide and onto the valve seat to make a clear pattern.
- Measure the valve seat width again. If the valve seat width is out of specification, reface and relap the valve seat.

****

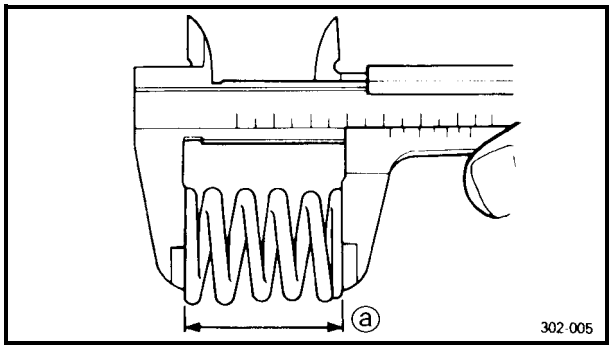

10.Measure:
- Valve spring free length ⓐ
  Out of specification → Replace.

Free length (valve spring):
Intake:
32.63 mm (1.28 in)
<Limit>: 31.0 mm (1.22 in)
Exhaust:
36.46 mm (1.44 in)
<Limit>: 34.6 mm (1.36 in)

Downloaded from www.Manualslib.com manuals search engine

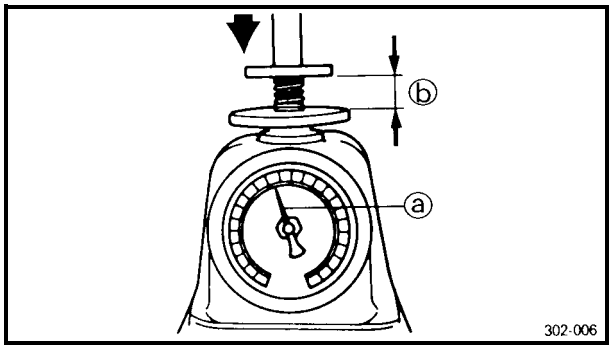

11.Measure:
- Compressed spring force ⓐ
  Out of specification → Replace.

ⓑ Installed length

Compressed spring force:
Intake:
100.0 ~ 115.7 N at 27.5 mm
(10.20 ~ 11.80 kg,
22.48 ~ 26.01 lb at 1.08 in)
Exhaust:
120.6 ~ 138.3 N at 31.0 mm
(12.30 ~ 14.10 kg,
27.11 ~ 31.09 lb at 1.22 in)

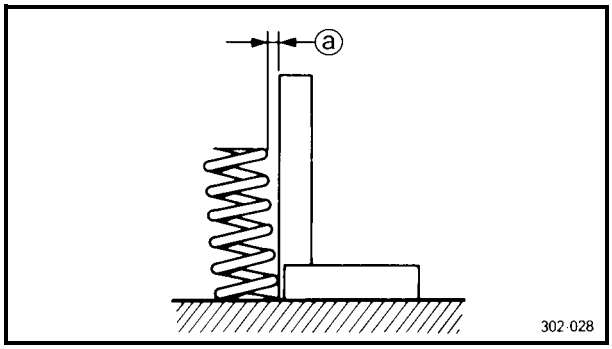

12.Measure:
- Spring tilt ⓐ
  Out of specification → Replace.

Spring tilt limit:
Intake:
2.5°/1.4 mm (0.06 in)
Exhaust:
2.5°/1.6 mm (0.06 in)

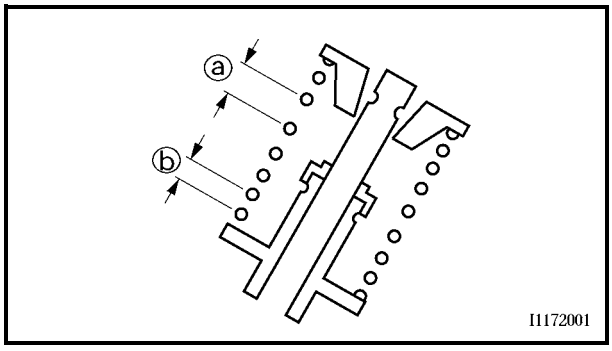

INSTALLING THE VALVE AND VALVE SPRING

1.Apply:
- Molybdenum disulfide oil
  (onto the valve stem and valve stem seal)

2.Install:
- Valve spring seats
- Valve stem seals New
- Valves
- Valve springs
- Valve spring retainers

NOTE:
Install the valve springs with the larger pitch ⓐ facing upwards.

ⓑ Smaller pitch

Downloaded from www.Manualslib.com manuals search engine

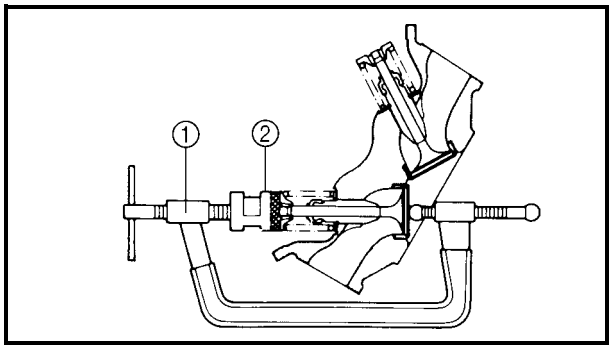

3.Install:
- Valve cotters

NOTE:
Install the valve cotters while compressing the valve spring with the valve spring compressor ① and valve spring compressor attachment ②.

Valve spring compressor:
P/N. YM-04019, 90890-04019
Valve spring compressor attachment:
P/N. 90890-01243

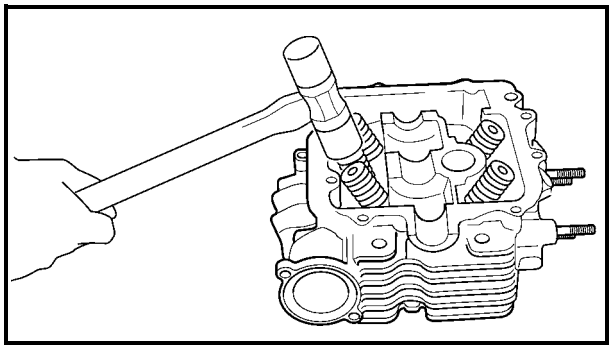

4.To secure the valve cotters onto the valve stem, lightly tap the valve tip with a piece of wood.

CAUTION:
Hitting the valve tip with excessive force could damage the valve.

Downloaded from www.Manualslib.com manuals search engine

CYLINDER AND PISTON

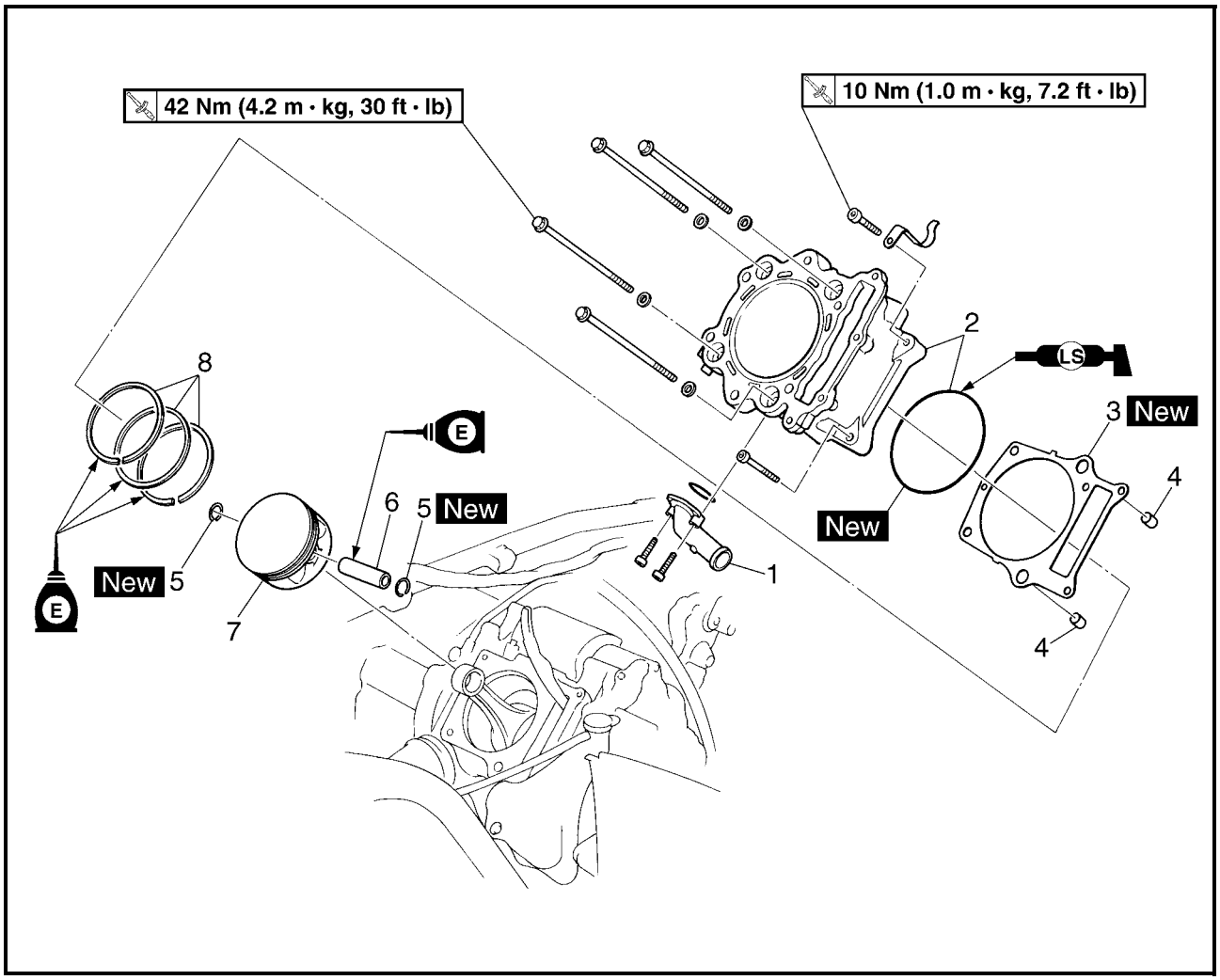

Order	Job name/Part name	Q'ty	Remarks
	Removing the cylinder and piston		Remove the parts in the order below.
	Water pump outlet hose		Refer to "WATER PUMP" in CHAPTER 5.
	Cylinder head		Refer to "CAMSHAFT AND CYLINDER HEAD".
1	Coolant inlet joint	1	
2	Cylinder/O-ring	1/1	Refer to "INSTALLING THE CYLINDER".
3	Cylinder gasket	1	
4	Dowel pin	2	
5	Piston pin clip	2	
6	Piston pin	1	Refer to "REMOVING/INSTALLING THE PISTON".
7	Piston	1	
8	Piston ring set	1	
			For installation, reverse the removal procedure.

Downloaded from www.Manualslib.com manuals search engine

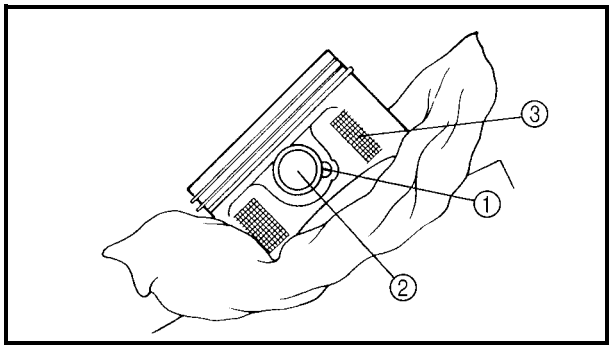

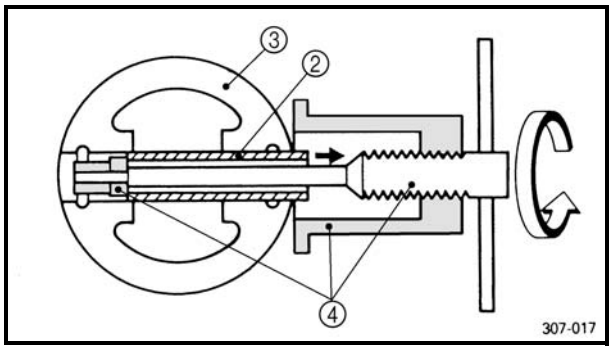

REMOVING THE PISTON

1.Remove:
- Piston pin clips ①
- Piston pin ②
- Piston ③

NOTE:
- Put identification marks on each piston head for reference during reinstallation.
- Before removing each piston pin, deburr the clip groove and pin hole area. If the piston pin groove is deburred and the piston pin is still difficult to remove, use the piston pin puller ④.

	Piston pin puller: **P/N. YU-01304, 90890-01304**

CAUTION:
Do not use a hammer to drive the piston pin out.

2.Remove:
- Piston rings

NOTE:
Spread the end gaps apart while at the same time lifting the piston ring over the top of the piston crown, as shown in the illustration.

CHECKING THE CYLINDER AND PISTON

1.Check:
- Cylinder and piston walls
  Vertical scratches → Rebore or replace the cylinder and the piston.

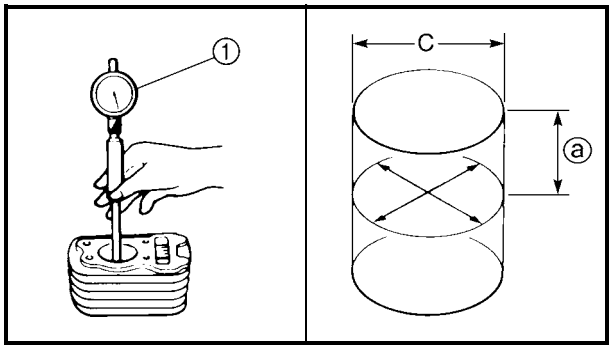

2.Measure:
- Piston-to-cylinder clearance

****

Measurement steps:
1st step:
- Measure the cylinder bore “C” with a cylinder bore gauge ①.

ⓐ 50 mm (2.0 in) from the top of the cylinder

Downloaded from www.Manualslib.com manuals search engine

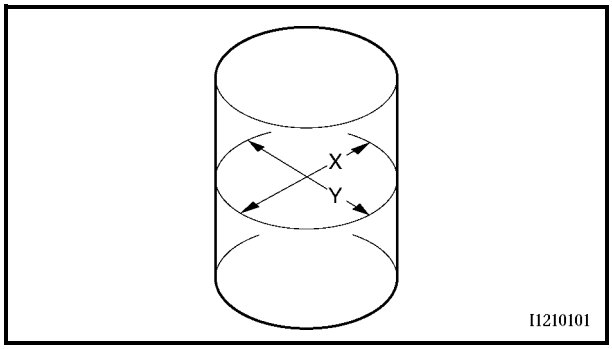

NOTE:
Measure cylinder bore "C" in parallel to and at right angles to the cylinder matching surface. Then, find the average of the measurements.

	Standard	Wear limit
Cylinder bore "C"	100.005 ~ 100.055 mm (3.9372 ~ 3.9392 in)	100.100 mm (3.9404 in)
$C = \frac{X+Y}{2}$		

- If out of specification, rebore or replace the cylinder, and replace the piston and piston rings as a set.

2nd step:

- Measure piston skirt diameter "P" with a micrometer.

ⓑ 5.0 mm (0.20 in) from the piston bottom edge

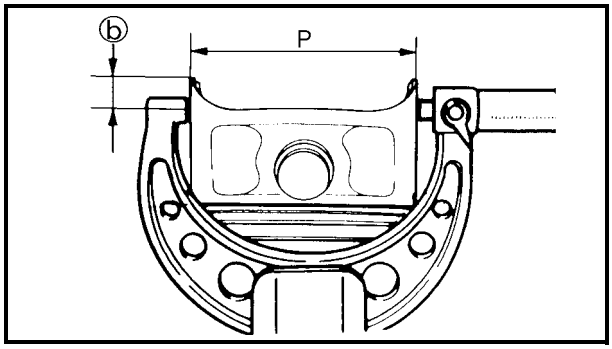

Piston skirt diameter "P":	
Standard	99.945 ~ 99.995 mm (3.9348 ~ 3.9368 in)

- If out of specification, replace the piston and piston rings as a set.

3rd step:

- Find the piston-to-cylinder clearance with the following formula.

Piston-to-cylinder clearance =
Cylinder bore "C" –
Piston skirt diameter "P"

Piston-to-cylinder clearance:
0.05 ~ 0.07 mm
(0.0020 ~ 0.0028 in)
<Limit>: 0.15 mm (0.0059 in)

- If out of specification, rebore or replace the cylinder, and replace the piston and piston rings as a set.

****

Downloaded from www.Manualslib.com manuals search engine

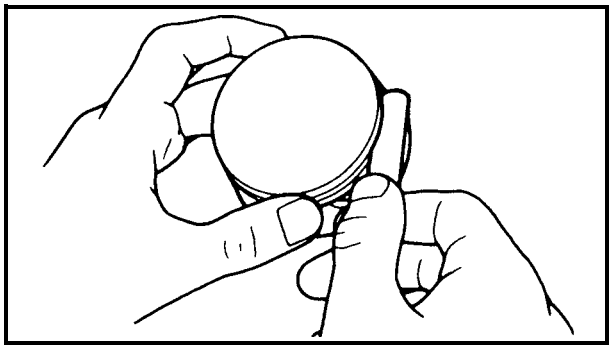

CHECKING THE PISTON RING

1.Measure:

- Ring side clearance
  Use a feeler gauge.
  Out of specification → Replace the piston and rings as a set.

NOTE:
Clean carbon from the piston ring grooves and rings before measuring the side clearance.

	Side clearance	
	Standard	Limit
Top ring	0.04 ~ 0.08 mm (0.0016 ~ 0.0031 in)	0.13 mm (0.0051 in)
2nd ring	0.03 ~ 0.07 mm (0.0012 ~ 0.0028 in)	0.13 mm (0.0051 in)

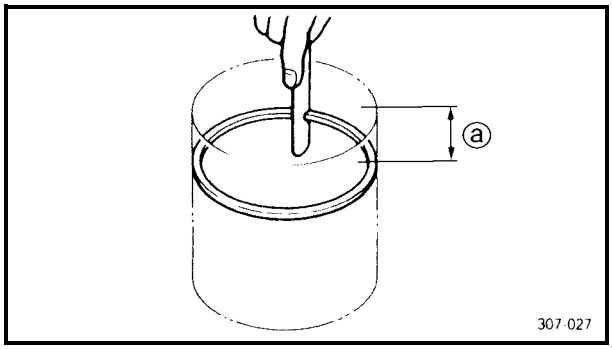

2.Position:

- Piston ring
  (in cylinder)

NOTE:
Insert a ring into the cylinder and push it approximately 50 mm (2.0 in) into the cylinder. Push the ring with the piston crown so that the ring will be at a right angle to the cylinder bore.

ⓐ 50 mm (2.0 in)

3.Measure:

- Ring end gap
  Out of specification → Replace.

NOTE:
You cannot measure the end gap on the expander spacer of the oil control ring. If the oil control ring rails show excessive gap, replace all three rings.

	End gap	
	Standard	Limit
Top ring	0.30 ~ 0.45 mm (0.0118 ~ 0.0177 in)	0.70 mm (0.0276 in)
2nd ring	0.30 ~ 0.45 mm (0.0118 ~ 0.0177 in)	0.80 mm (0.0315 in)
Oil ring	0.2 ~ 0.7 mm (0.0079 ~ 0.0276 in)	—

Downloaded from www.Manualslib.com manuals search engine

CHECKING THE PISTON PIN

1.Check:
- Piston pin
  Blue discoloration/grooves → Replace, then inspect the lubrication system.

2.Measure:
- Piston pin-to-piston clearance

****

Measurement steps:

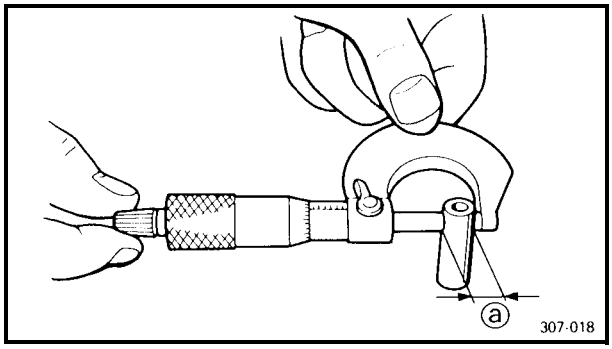

- Measure the piston pin outside diameter ⓐ.
  If out of specification, replace the piston pin.

Outside diameter (piston pin):
21.991 ~ 22.000 mm
(0.8658 ~ 0.8661 in)
<Limit>: 21.971 mm (0.8650 in)

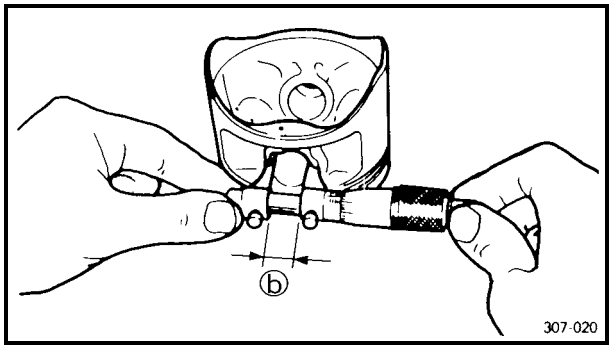

- Measure the piston inside diameter ⓑ.

Piston pin bore inside diameter:
22.004 ~ 22.015 mm
(0.8663 ~ 0.8667 in)
<Limit>: 22.045 mm (0.8679 in)

- Calculate the piston pin-to-piston clearance with the following formula.

Piston pin-to-piston clearance =
Bore size (piston pin) ⓑ –
Outside diameter (piston pin) ⓐ

- If out of specification, replace the piston.

Piston pin-to-piston clearance:
0.004 ~ 0.024 mm
(0.00016 ~ 0.00094 in)
<Limit>: 0.07 mm (0.003 in)

****

INSTALLING THE PISTON

1.Install:
- Piston rings
  (onto the piston)

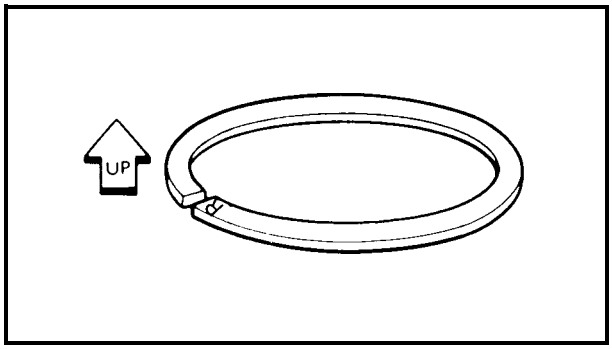

NOTE:
- Be sure to install the piston rings so that the manufacturer's marks or numbers are located on the upper side of the rings.
- Lubricate the piston and piston rings liberally with engine oil.

Downloaded from www.Manualslib.com manuals search engine

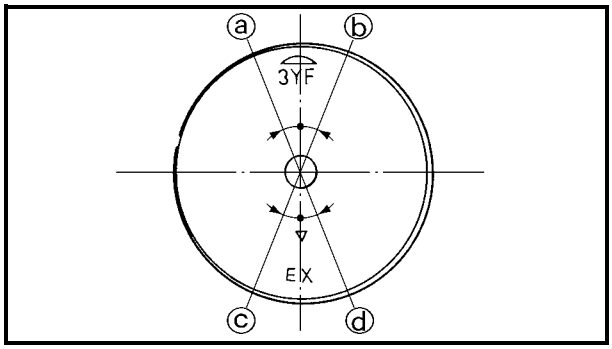

2.Position:
- Top ring
- 2nd ring
- Oil ring

Offset the piston ring end gaps as shown.

ⓐ Top ring end
ⓑ Oil ring end (lower)
ⓒ Oil ring end (upper)
ⓓ 2nd ring end

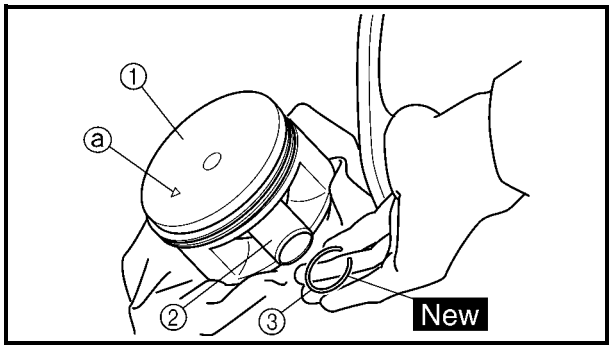

3.Install:
- Piston ①
- Piston pin ②
- Piston pin clips ③ New

NOTE:
- Apply engine oil onto the piston pin, piston ring and piston.
- Be sure that the arrow mark ⓐ on the piston points to the exhaust side of the engine.
- Before installing the piston pin clip, cover the crankcase with a clean rag to prevent the piston pin clip from falling into the crankcase.

4.Lubricate:
- Piston
- Piston rings
- Cylinder

NOTE:
Apply a liberal coating of engine oil.

INSTALLING THE CYLINDER

1.Install:
- Cylinder
- O-ring New
- Bolts (M10) — **42 Nm (4.2 m • kg, 30 ft • lb)**
- Bolts (M6) — **10 Nm (1.0 m • kg, 7.2 ft • lb)**

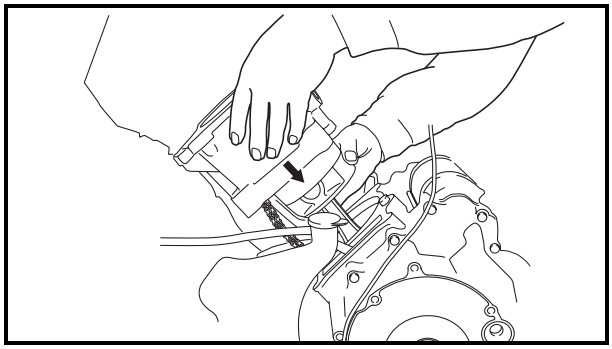

NOTE:
Install the cylinder with one hand while compressing the piston rings with the other hand.

CAUTION:
- **Be careful not to damage the timing chain damper during installation.**
- **Pass the timing chain through the timing chain cavity.**

Downloaded from www.Manualslib.com manuals search engine

RECOIL STARTER AND AC MAGNETO

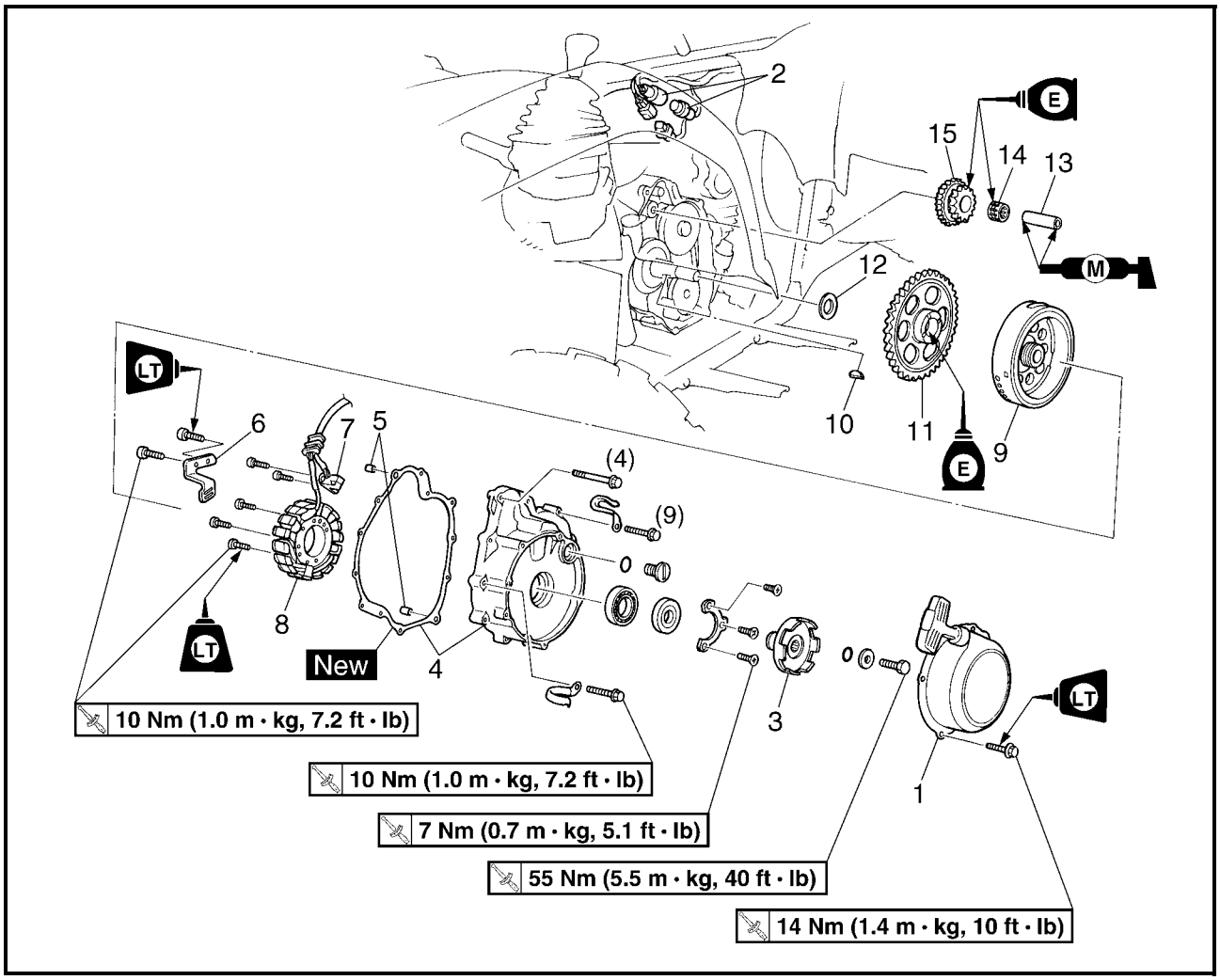

Order	Job name/Part name	Q'ty	Remarks
	Removing the AC magneto		Remove the parts in the order below.
	Engine oil		Drain. Refer to "CHANGING THE ENGINE OIL" in CHAPTER 3.
	Coolant		Drain. Refer to "CHANGING THE COOLANT" in CHAPTER 3.
	Seat and side panels/engine side cover		Refer to "SEAT AND SIDE PANELS" in CHAPTER 3.
	Left footrest board		Refer to "FOOTREST BOARDS" in CHAPTER 3.
	Select lever unit		Refer to "SELECT LEVER UNIT AND RESERVOIR".
	Water pump assembly		Refer to "WATER PUMP" in CHAPTER 5.
1	Recoil starter assembly	1	
2	AC magneto coupler	2	Disconnect.

Downloaded from www.Manualslib.com manuals search engine

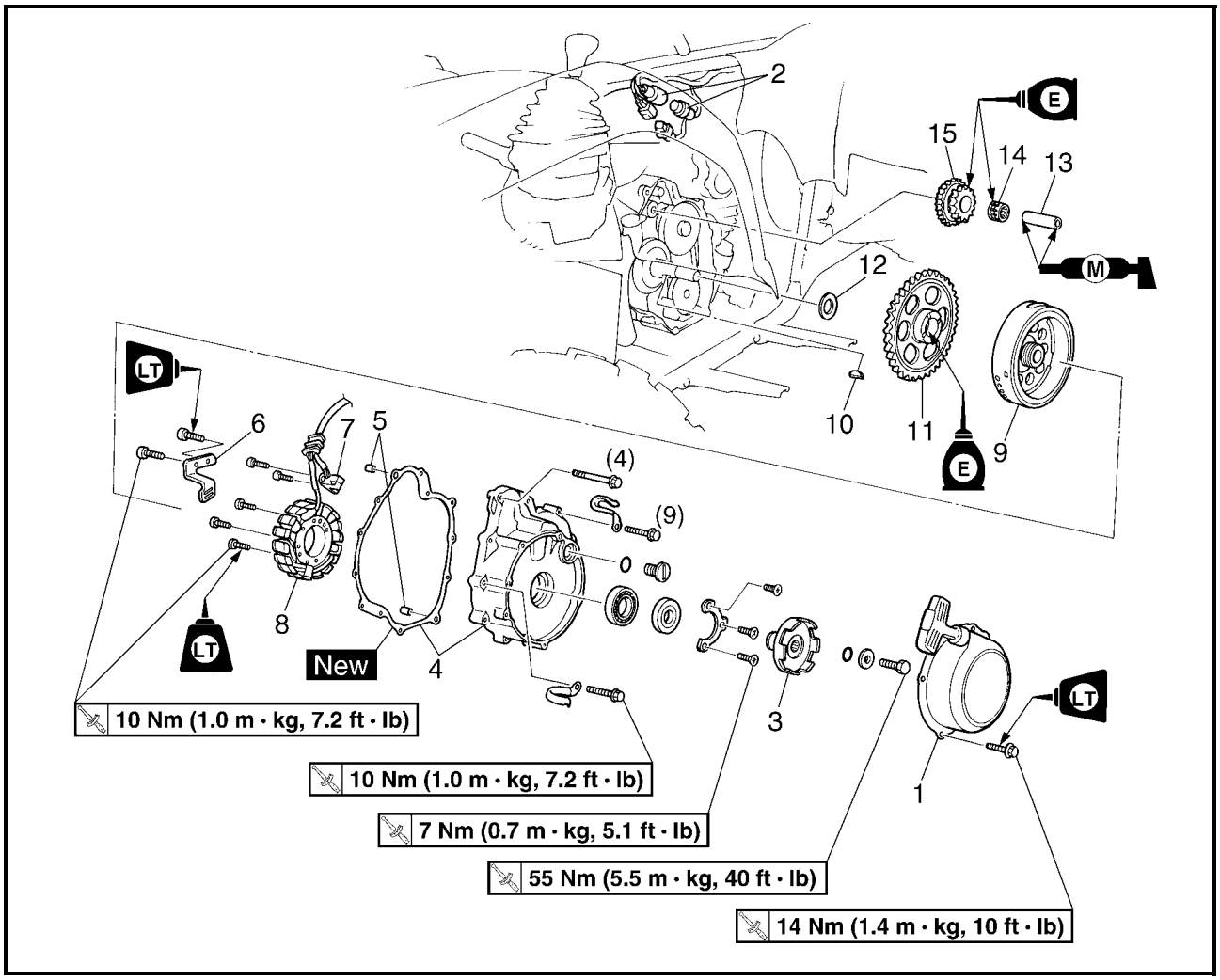

Order	Job name/Part name	Q'ty	Remarks
3	Starter pulley	1	Refer to "REMOVING/INSTALLING THE AC MAGNETO".
4	Crankcase cover (left)/gasket	1/1	
5	Dowel pin	2	
6	Lead holder	1	
7	Pickup coil	1	
8	Starter assembly	1	
9	CDI rotor	1	Refer to "REMOVING/INSTALLING THE AC MAGNETO".
10	Woodruff key	1	
11	Starter wheel gear	1	
12	Washer	1	
13	Starter idle gear shaft	1	
14	Bearing	1	
15	Starter idle gear	1	
			For installation, reverse the removal procedure.

Downloaded from www.Manualslib.com manuals search engine

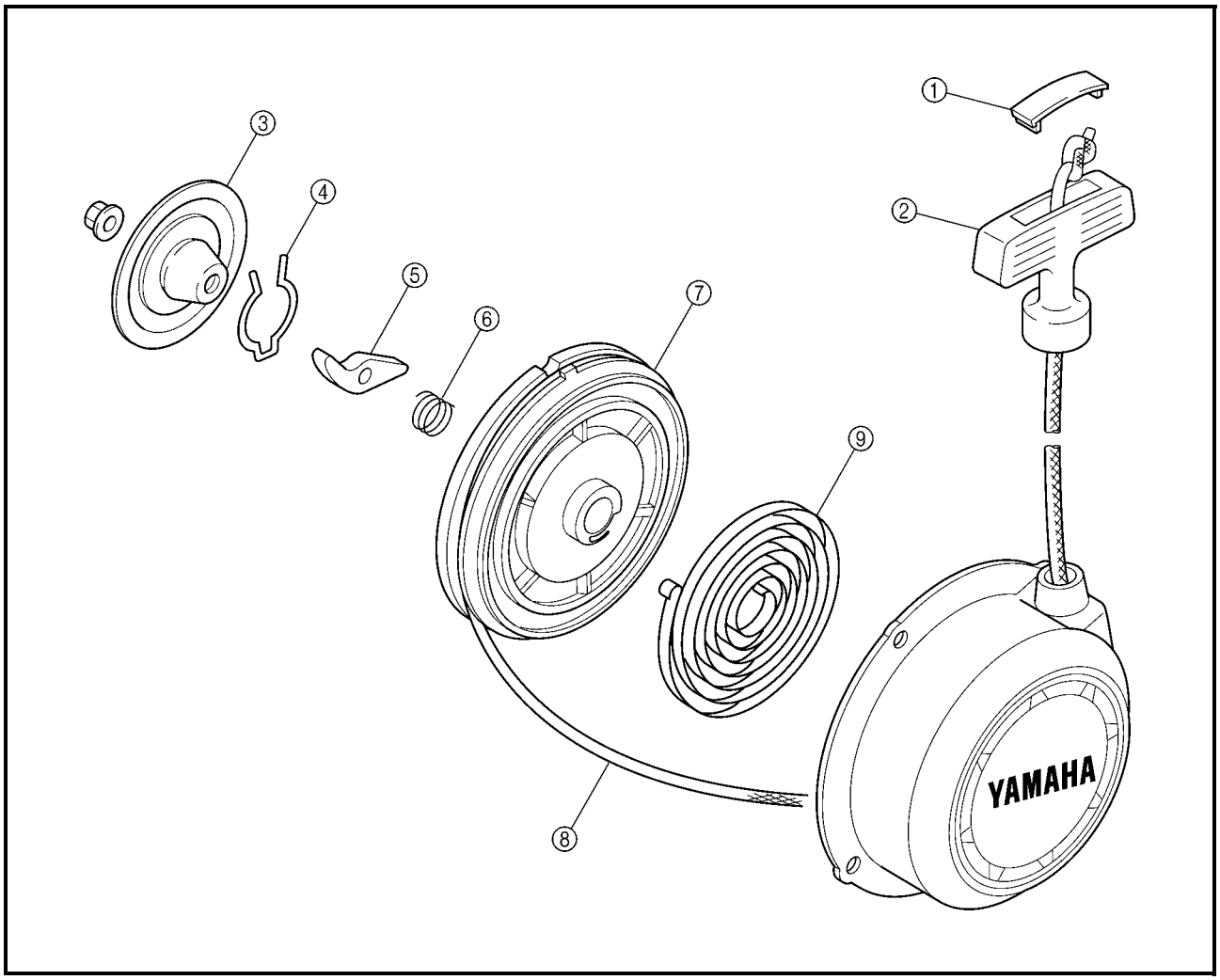

Order	Job name/Part name	Q'ty	Remarks
	Disassembling the recoil starter		Remove the parts in the order below.
①	Cap	1	Refer to "DISASSEMBLING/ASSEMBLING THE RECOIL STARTER".
②	Starter handle	1	
③	Friction plate	1	
④	Pawl spring	1	
⑤	Drive pawl	1	
⑥	Spring	1	
⑦	Sheave drum	1	
⑧	Rope	1	
⑨	Coil spring	1	
			For assembly, reverse the disassembly procedure.

Downloaded from www.Manualslib.com manuals search engine

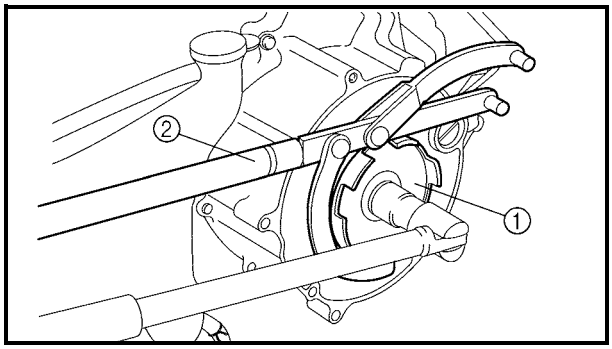

REMOVING THE AC MAGNETO

1.Remove:
- Starter pulley ①

NOTE:
Use the rotor holding tool ② to hold the starter pulley.

	Rotor holding tool: **P/N. YU-01235, 90890-01235**

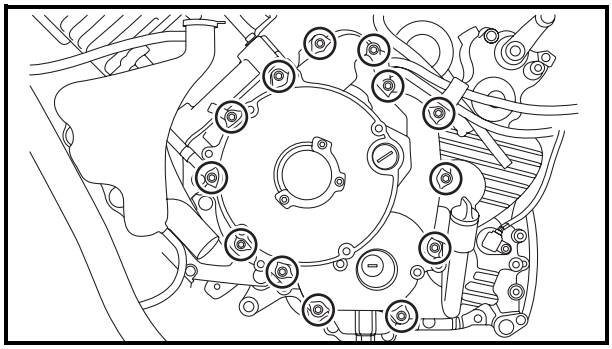

2.Remove:
- Crankcase cover (left)
- Gasket
- Dowel pins

NOTE:
Working in a crisscross pattern, loosen each bolt 1/4 of a turn. Remove them after all of them are loosened.

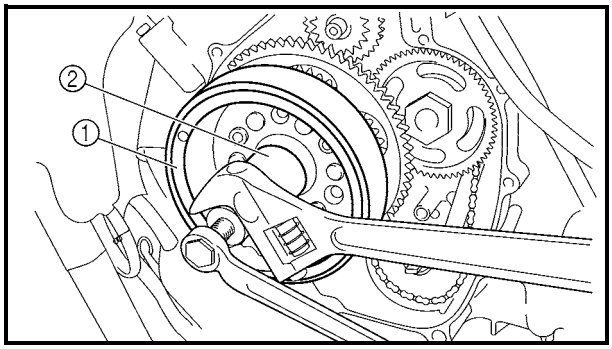

3.Remove:
- CDI rotor ①

NOTE:
Use the flywheel puller ②.

	Flywheel puller: **P/N. YM-01404, 90890-01404**

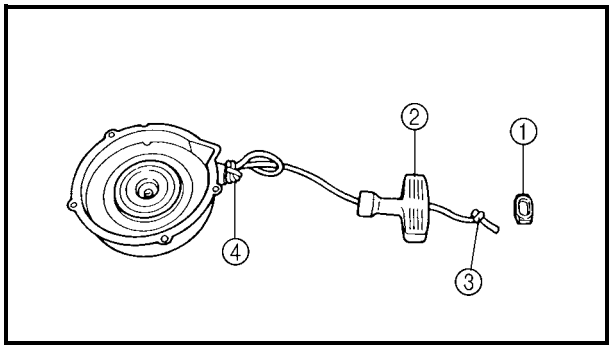

DISASSEMBLING THE RECOIL STARTER

1.Remove:
- Cap ①
- Starter handle ②

NOTE:
Before untying the knot ③ above the starter handle, make a knot ④ in the rope so that the rope is not pulled into the case.

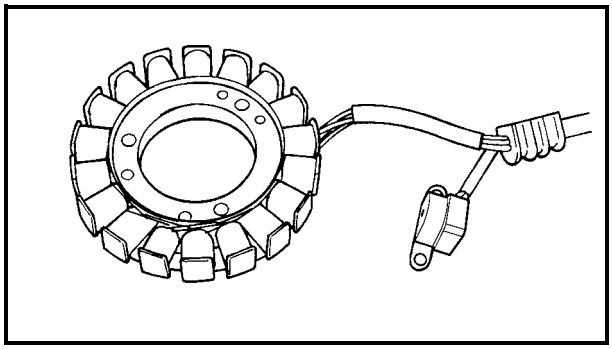

CHECKING THE AC MAGNETO

1.Check:
- Starter coil
- Pickup coil
  Damage → Replace.

Downloaded from www.Manualslib.com manuals search engine

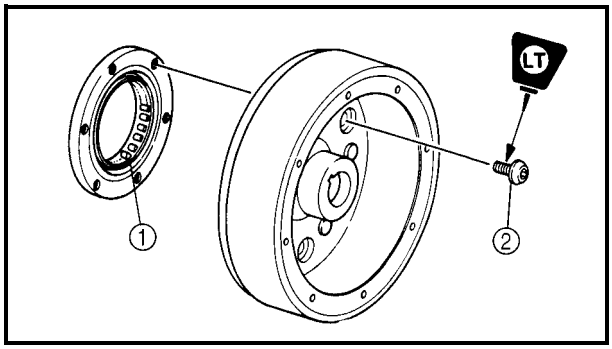

CHECKING THE STARTER CLUTCH

1.Check:
- Starter one-way clutch ①
  Cracks/damage → Replace.
- Bolts ② (starter clutch)
  Loose → Replace with a new one, and clinch the end of the bolt.

NOTE:
The arrow mark on the starter clutch must face inward, away from the CDI rotor.

Bolts (starter clutch):
30 Nm (3.0 m • kg, 22 ft • lb)
LOCTITE®

****

Inspection steps:
- Install the starter wheel gear to the starter clutch, and hold the starter clutch.
- When turning the starter wheel gear counter clockwise [A], the starter clutch and the wheel gear should be engaged.
  If not, the starter clutch is faulty. Replace it.
- When turning the starter wheel gear clockwise [B], the starter wheel gear should turn freely.
  If not, the starter clutch is faulty. Replace it.

****

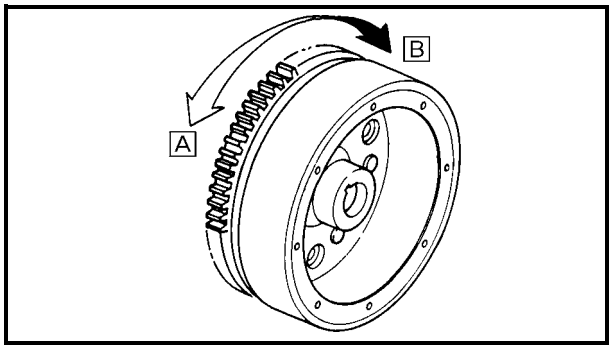

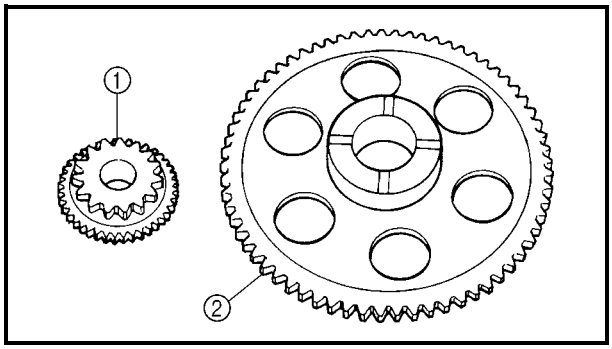

2.Check:
- Gear teeth (starter idle) ①
- Gear teeth (starter wheel) ②
  Burrs/clips/roughness/wear → Replace.

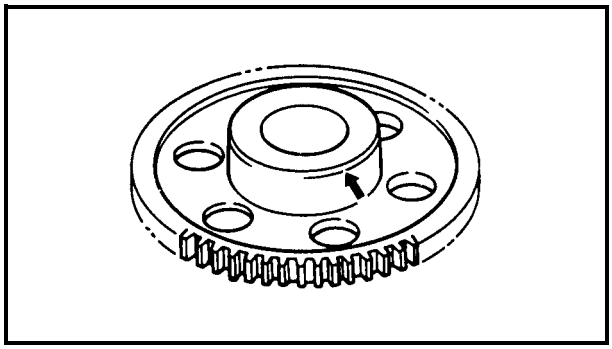

3.Check:
- Starter wheel gear
  (contacting surface)
  Damage/pitting/wear → Replace.

Downloaded from www.Manualslib.com manuals search engine

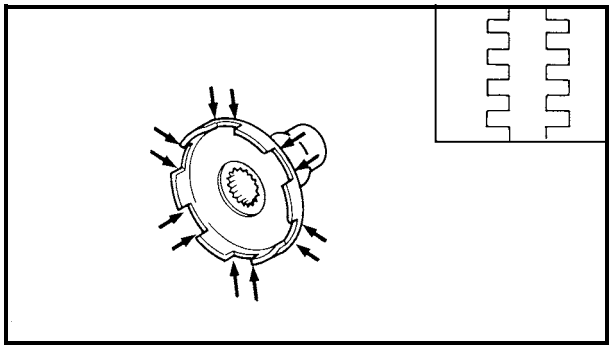

CHECKING THE STARTER PULLEY

1.Check:
- Starter pulley
  Cracks/pitting → Deburr or replace.

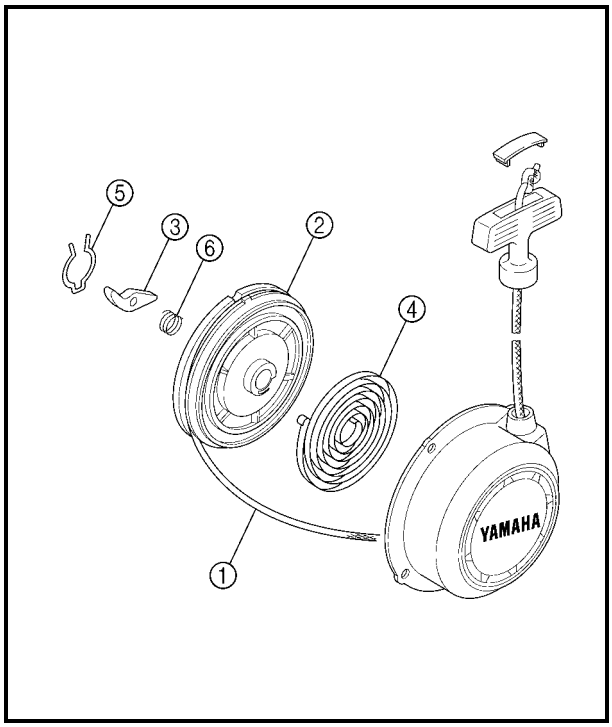

CHECKING THE RECOIL STARTER

1.Check:
- Rope ①
- Sheave drum ②
- Drive pawl ③
  Wear/damage → Replace.
- Coil spring ④
- Pawl spring ⑤
- Spring ⑥
  Fatigue → Replace.

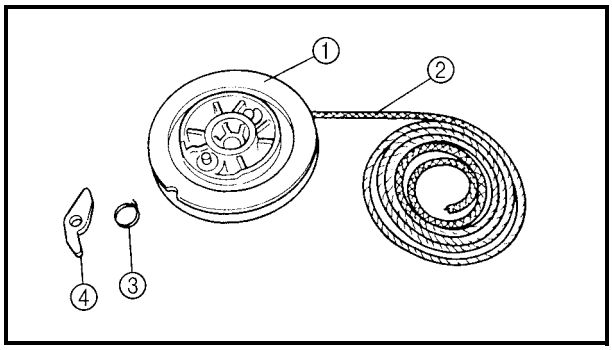

ASSEMBLEING THE RECOIL STARTER

1.Install:
- Sheave drum ①
- Rope ②
- Pawl spring ③
- Drive pawl ④

NOTE:
Wind the rope 4-1/2 turns clockwise around the sheave drum. Then insert the rope into the drum slit ⓐ.

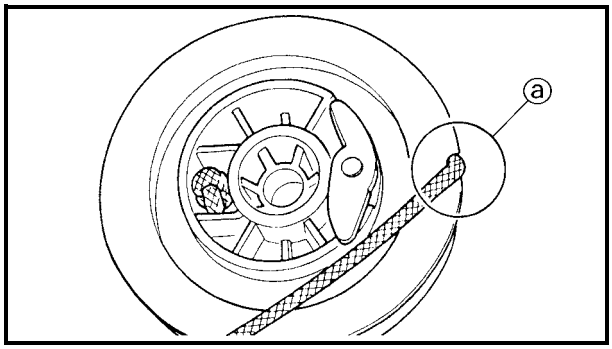

Downloaded from www.Manualslib.com manuals search engine

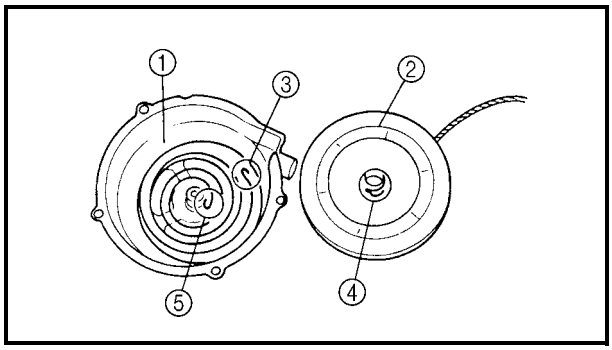

2.Install:
- Starter spring ①
- Sheave drum assembly ②

NOTE:
- Mesh the spring hook ③ with the case slit, then wind the spring clockwise into the case from the larger to smaller diameter.
- Mesh the sheave drum hook ④ with the spring hook ⑤.

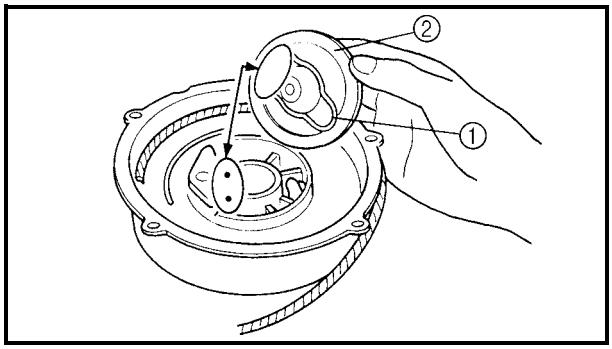

3.Install:
- Spring ①
- Friction plate ②
- Nut

NOTE:
Insert the spring hooks into the pawl side holes.

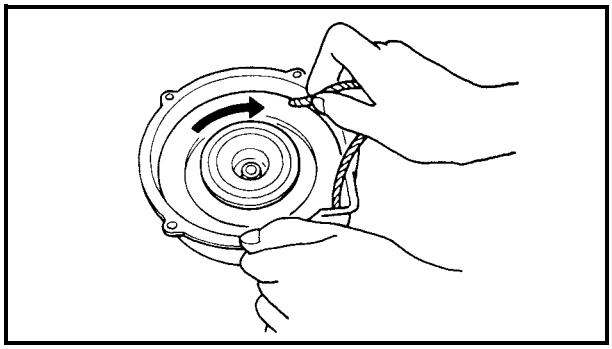

4.Turn the sheave drum 3-turn clockwise to give preload to the spring.

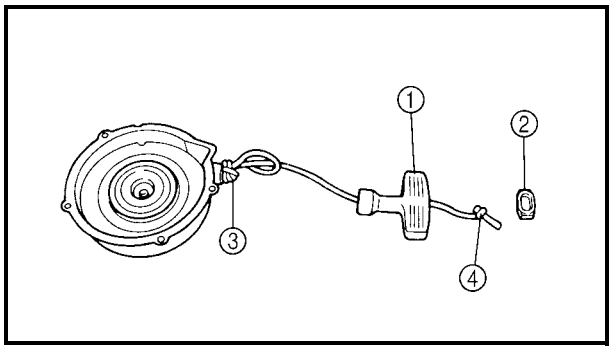

5.Install:
- Starter handle ①
- Cap ②

NOTE:
- Pass the rope through the case hole and make a knot ③ on the rope so that the rope is not pulled into the case.
- Untie the knot ③ after making a knot ④ above the handle.

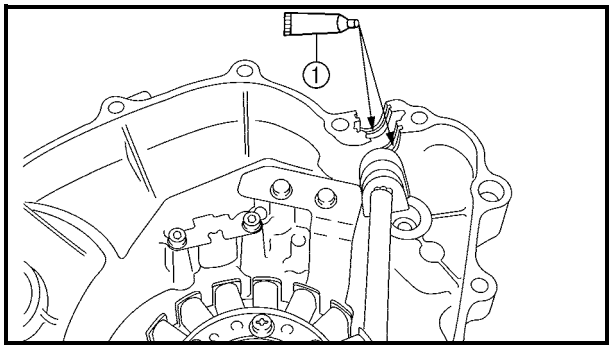

INSTALLING THE AC MAGNETO

1.Apply:
- Sealant (Quick Gasket®) ①
  (into the slit)

Sealant (Quick Gasket®):
P/N. ACC-11001-05-01
Yamaha bond No. 1215:
P/N. 90890-85505

Downloaded from www.Manualslib.com manuals search engine

2.Install:
- Woodruff key
- CDI rotor

NOTE:
- Before installing the rotor, clean the outside of the crankshaft and the inside of the rotor.
- After installing the rotor, check that the rotor rotates smoothly. If not, reinstall the key and rotor.

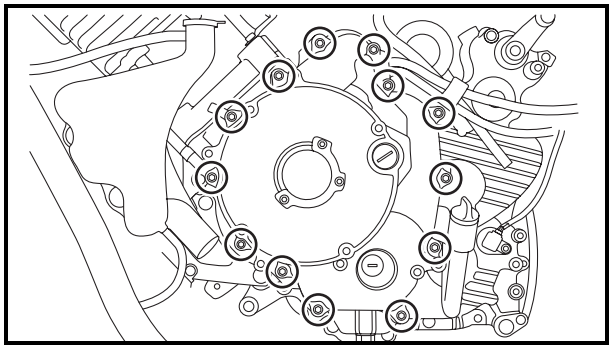

3.Install:
- Dowel pins
- Gasket New
- Crankcase cover (left)

10 Nm (1.0 m • kg, 7.2 ft • lb)

NOTE:
- When installing the crankcase cover (left), use a long rod to hold the CDI rotor in position from the outside. This will make assembly easier. Be careful not to damage the oil seal.
- Tighten the bolts in stages, using a criss-cross pattern.

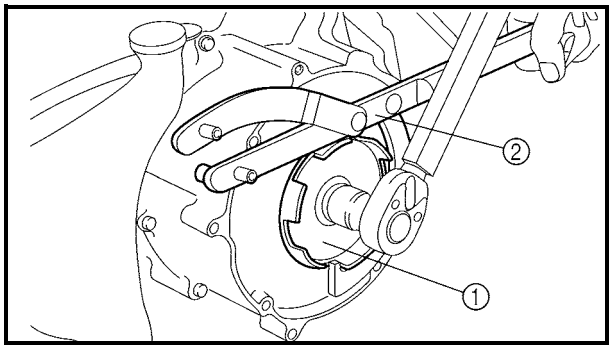

4.Install:
- Starter pulley ①

55 Nm (5.5 m • kg, 40 ft • lb)

NOTE:
Use a rotor holding tool ② to hold the starter pulley.

Rotor holding tool:
P/N. YU-01235, 90890-01235

NOTE:
Before installing the starter pulley, do not forget to install the O-ring.

Downloaded from www.Manualslib.com manuals search engine

5.Install:
- Select lever unit
- Select lever shift rod

NOTE:
Before installing the select lever shift rod, make sure that the select lever and shift cam is in the NEUTRAL position.

6.Adjust:
- Select lever shift rod
  Refer to “ADJUSTING THE SELECT LEVER CONTROL CABLE AND SHIFT ROD” in CHAPTER 3.

Downloaded from www.Manualslib.com manuals search engine

BALANCER GEARS AND OIL PUMP GEARS

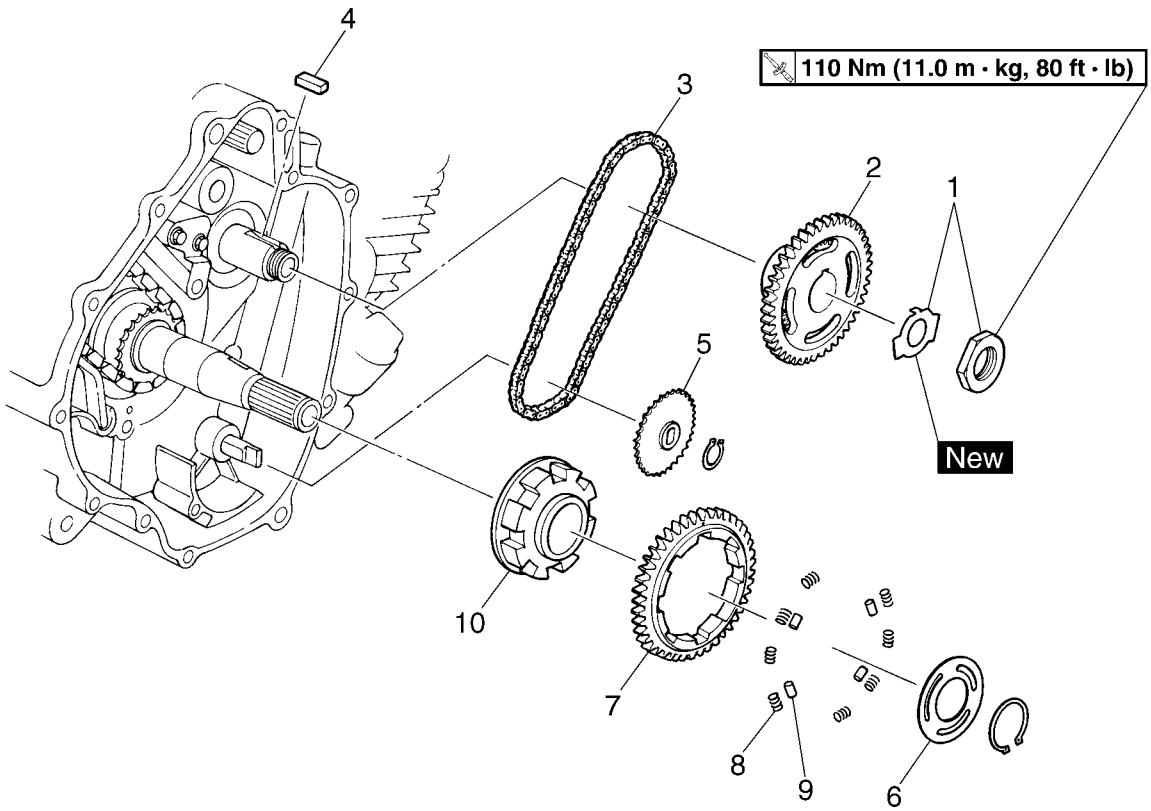

Order	Job name/Part name	Q'ty	Remarks
	Removing the balancer gears and oil pump gears		Remove the parts in the order below.
	Starter wheel gear		Refer to "RECOIL STARTER AND AC MAGNETO".
1	Nut/lock washer	1/1	
2	Balancer driven/oil pump drive gear	1	Refer to "REMOVING/INSTALLING THE BALANCER DRIVE GEAR AND BALANCER DRIVEN GEAR".
3	Chain	1	
4	Straight key	1	
5	Oil pump driven gear	1	
6	Plate	1	
7	Balancer drive gear	1	
8	Spring	8	
9	Pin	4	
10	Buffer boss	1	
			For installation, reverse the removal procedure.

Downloaded from www.Manualslib.com manuals search engine

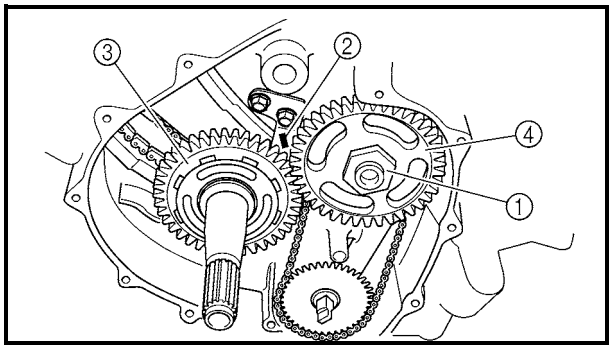

REMOVING THE BALANCER DRIVE GEAR AND BALANCER DRIVEN GEAR

1.Straighten the lock washer tabs.
2.Loosen:
- Balancer driven gear nut ①

NOTE:
Place an aluminum plate ② between the teeth of the balancer drive gear ③ and balancer driven gear ④.

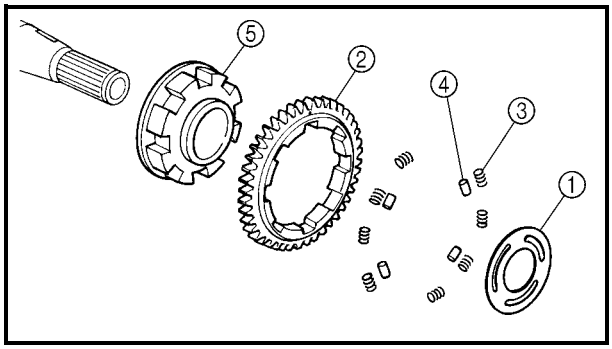

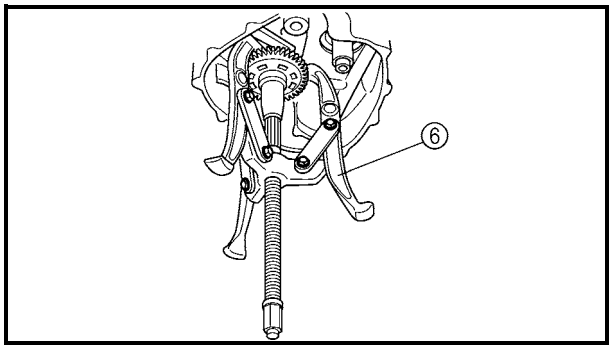

REMOVING THE BALANCER DRIVE GEAR AND BUFFER BOSS

1.Remove:
- Plate ①
- Balancer drive gear ②
- Springs ③
- Pins ④
- Buffer boss ⑤

NOTE:
- Using a three-leg puller ⑥ when removing the balancer drive gear ② and buffer boss ⑤.

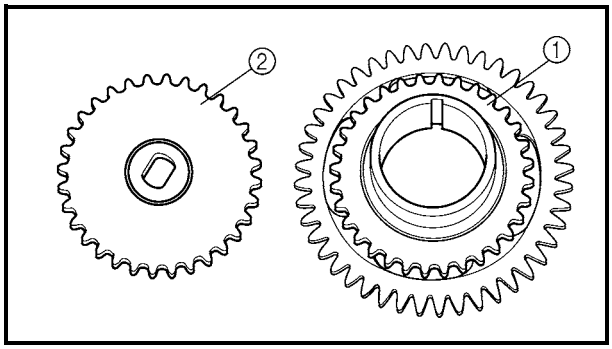

CHECKING THE OIL PUMP DRIVE

1.Check:
- Oil pump drive gear ①
- Oil pump driven gear ②
  Cracks/wear/damage → Replace.

Downloaded from www.Manualslib.com manuals search engine

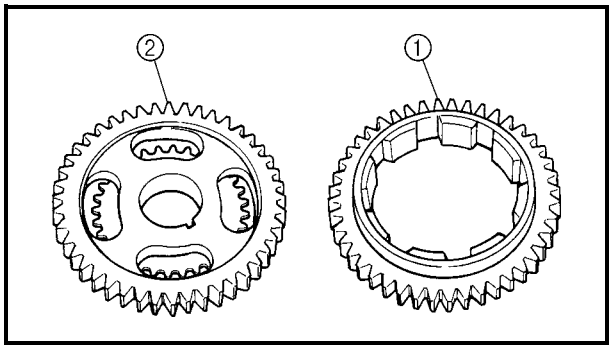

CHECKING THE BALANCER DRIVE

1.Check:
- Balancer drive gear ①
- Balancer driven gear ②
  Damage/wear → Replace the balancer drive gear and balancer driven gear as a set.
  Excessive noise during operation → Replace the balancer drive gear and balancer driven gear as a set.

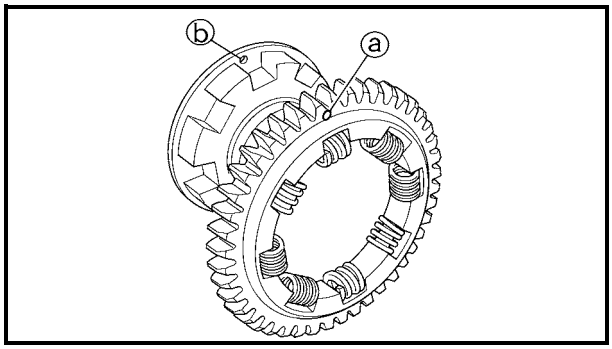

INSTALLING THE BALANCER DRIVE GEAR AND BALANCER DRIVEN GEAR

1.Install:
- Pin
- Spring
- Balancer drive gear
  (onto the buffer boss)

NOTE:
Align the punch mark ⓐ on the balancer drive gear with the hole ⓑ to the buffer boss.

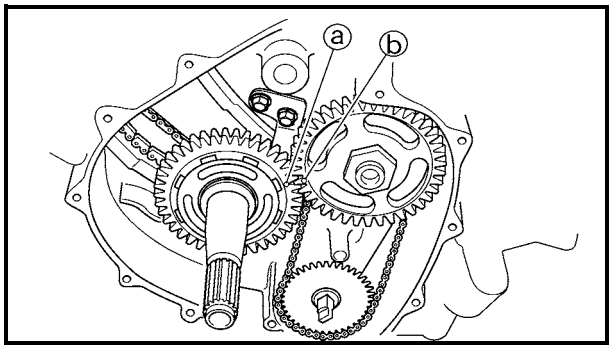

2.Install:
- Balancer drive gear
- Balancer driven gear

NOTE:
Align the punch mark ⓐ on the balancer drive gear with the punch mark ⓑ on the balancer driven gear.

Downloaded from www.Manualslib.com manuals search engine

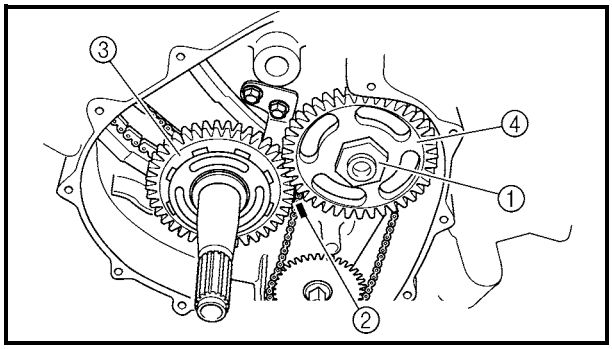

3.Install:
- Lock washer New
- Balancer driven gear nut ①

	140 Nm (14.0 m • kg, 100 ft • lb)

NOTE:
- Place an aluminum plate ② between the teeth of the balancer drive gear ③ and balancer driven gear ④.
- Apply the molybdenum disulfide grease to the thread of axles and nuts.

4.Bend the lock washer tabs along the balancer driven gear nut.

Downloaded from www.Manualslib.com manuals search engine

PRIMARY AND SECONDARY SHEAVES

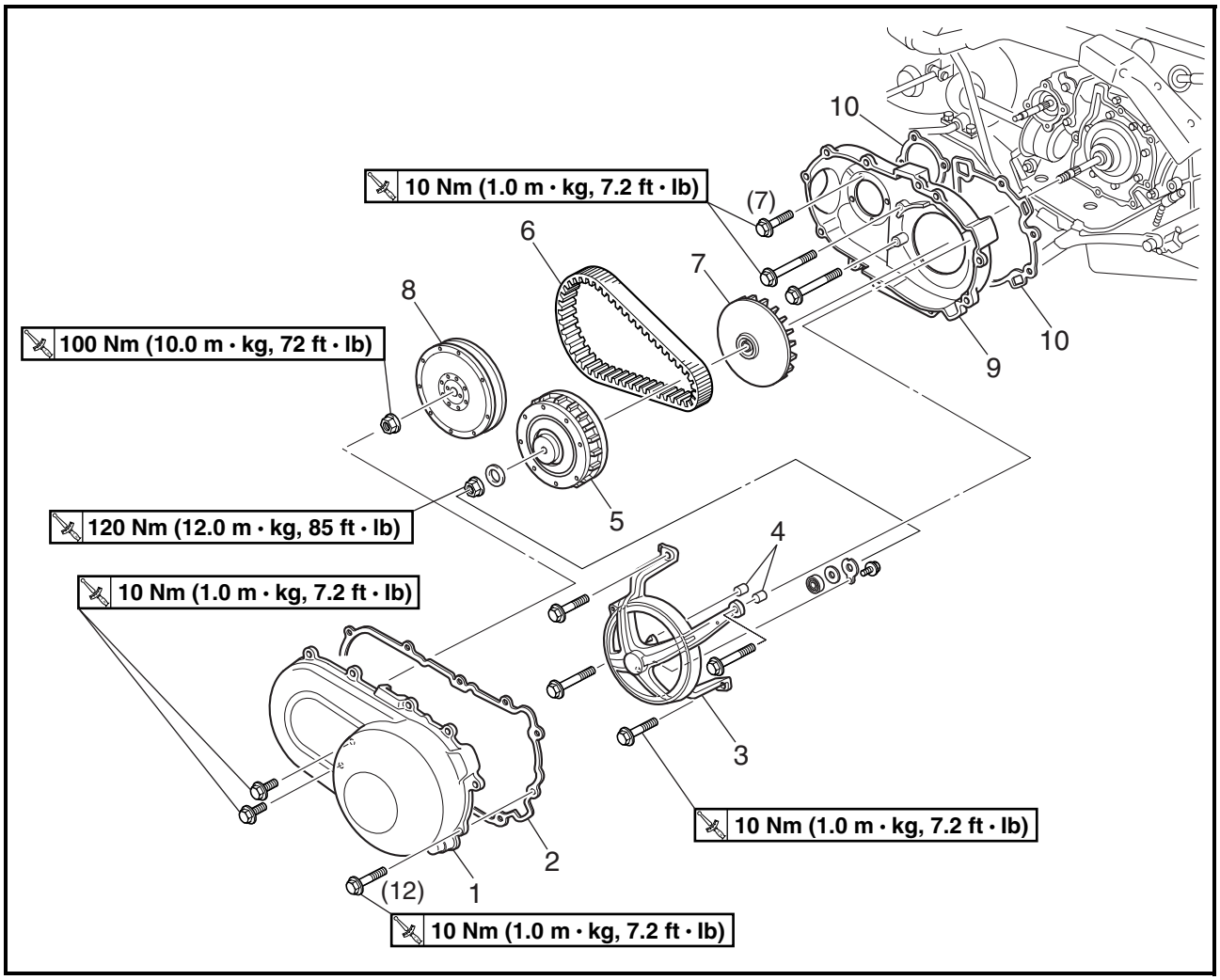

Order	Job name/Part name	Q'ty	Remarks
	Removing the primary and secondary sheave		Remove the parts in the order below.
	Front fender		Refer to "SEAT, CARRIERS, FENDERS AND FUEL TANK" in CHAPTER 3.
	Rear fender		
	Right footrest boards		
	Air duct assembly		Refer to "ENGINE REMOVAL".
1	Drive belt cover	1	
2	Rubber gasket	1	
3	Bearing housing	1	
4	Dowel pin	2	
5	Primary sheave assembly	1	Refer to "REMOVING/INSTALLING THE PRIMARY AND SECONDARY SHEAVES".
6	V-belt	1	

Downloaded from www.Manualslib.com manuals search engine

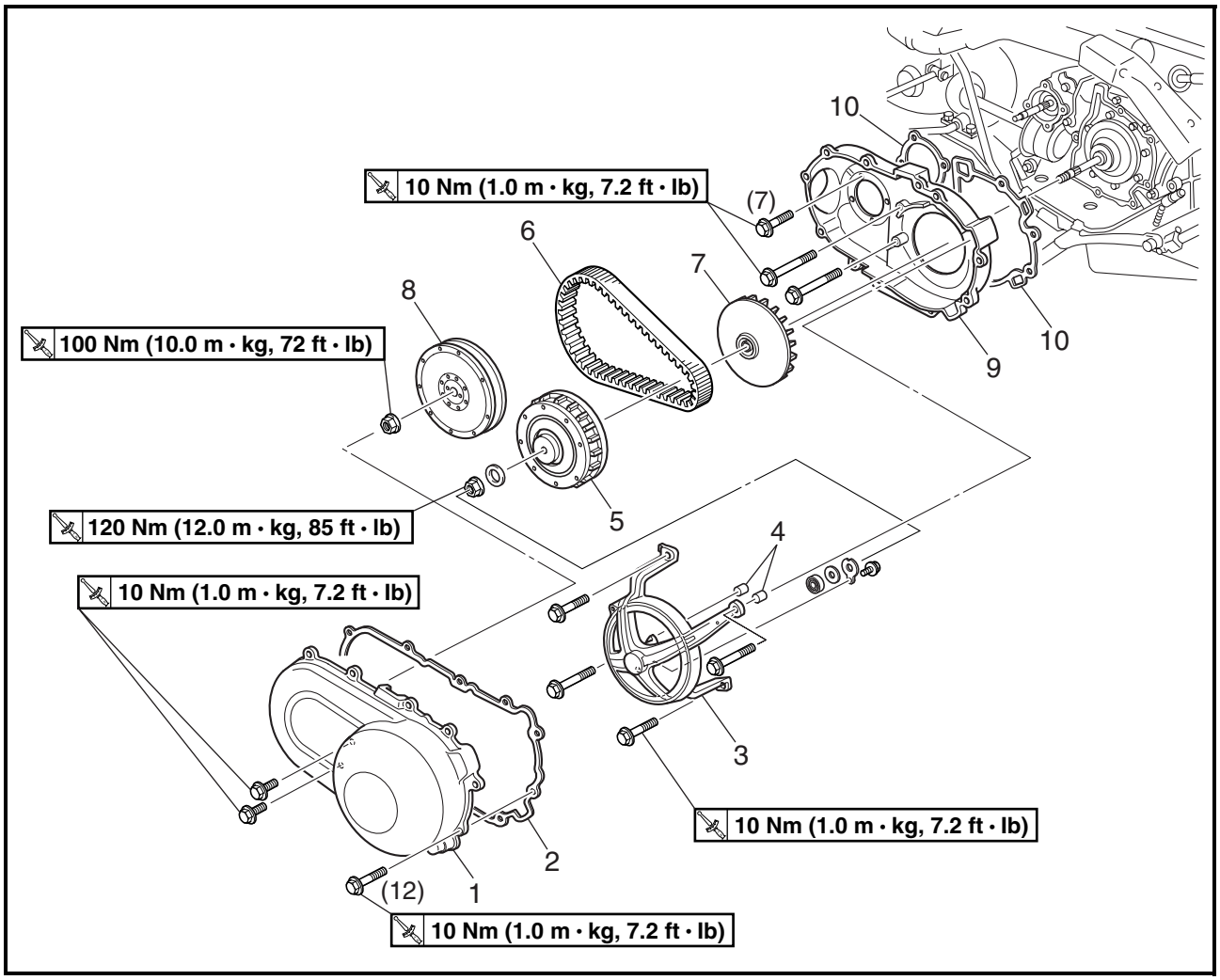

Order	Job name/Part name	Q'ty	Remarks
7	Primary fixed sheave	1	Refer to "REMOVING/INSTALLING THE PRIMARY AND SECONDARY SHEAVES".
8	Secondary sheave assembly	1	
9	Drive belt case	1	
10	Rubber gasket	2	
			For installation, reverse the removal procedure.

Downloaded from www.Manualslib.com manuals search engine

PRIMARY SHEAVE

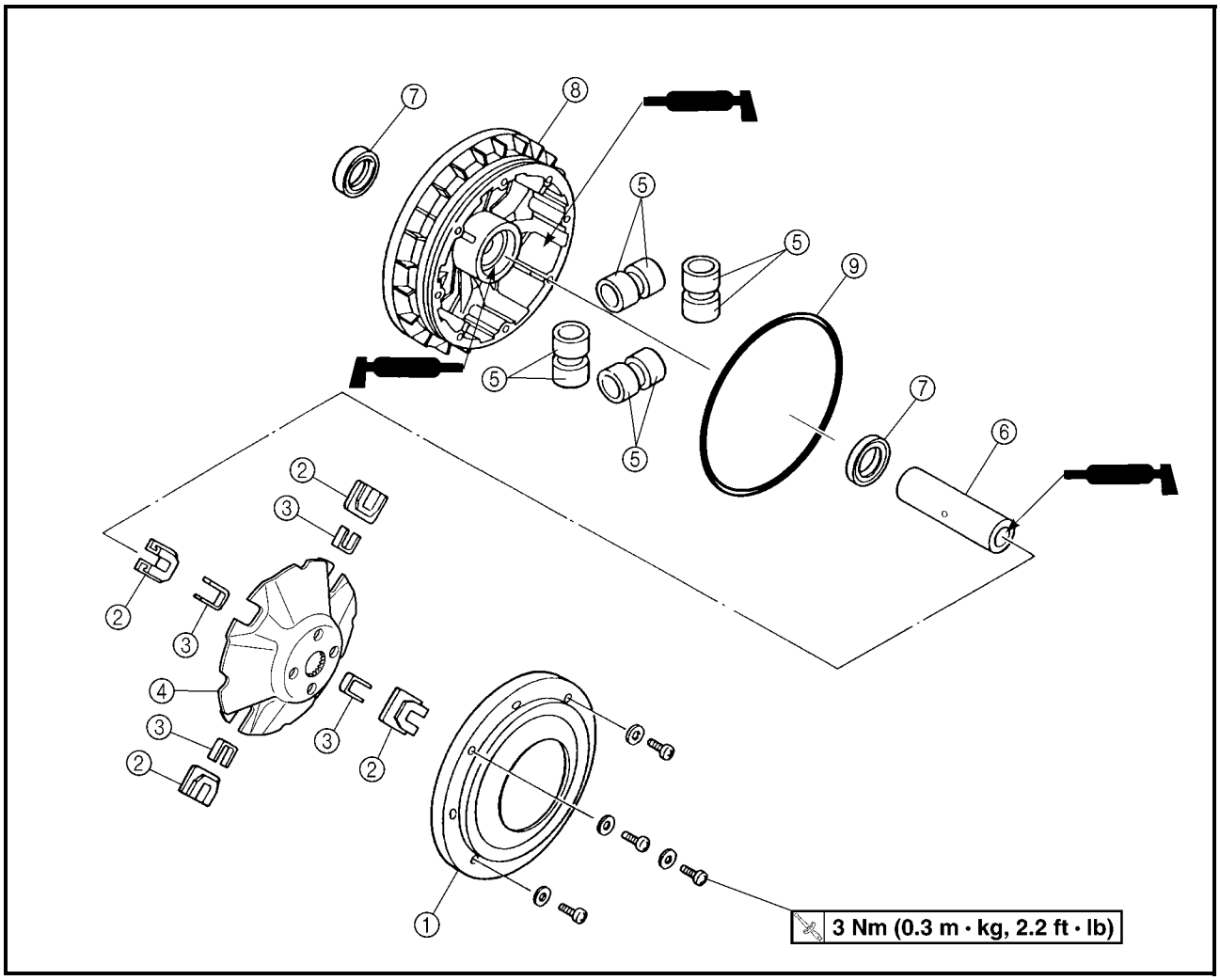

Order	Job name/Part name	Q'ty	Remarks
	Disassembling the primary sheave		Remove the parts in the order below.
①	Primary pulley sheave cap	1	Refer to "ASSEMBLING THE PRIMARY SHEAVE".
②	Primary pulley slider	4	
③	Spacer	4	
④	Primary pulley cam	1	
⑤	Primary pulley weight	8	
⑥	Collar	1	
⑦	Oil seal	2	
⑧	Primary sliding sheave	1	
⑨	O-ring	1	
			For assembly, reverse the disassembly procedure.

Downloaded from www.Manualslib.com manuals search engine

SECONDARY SHEAVE

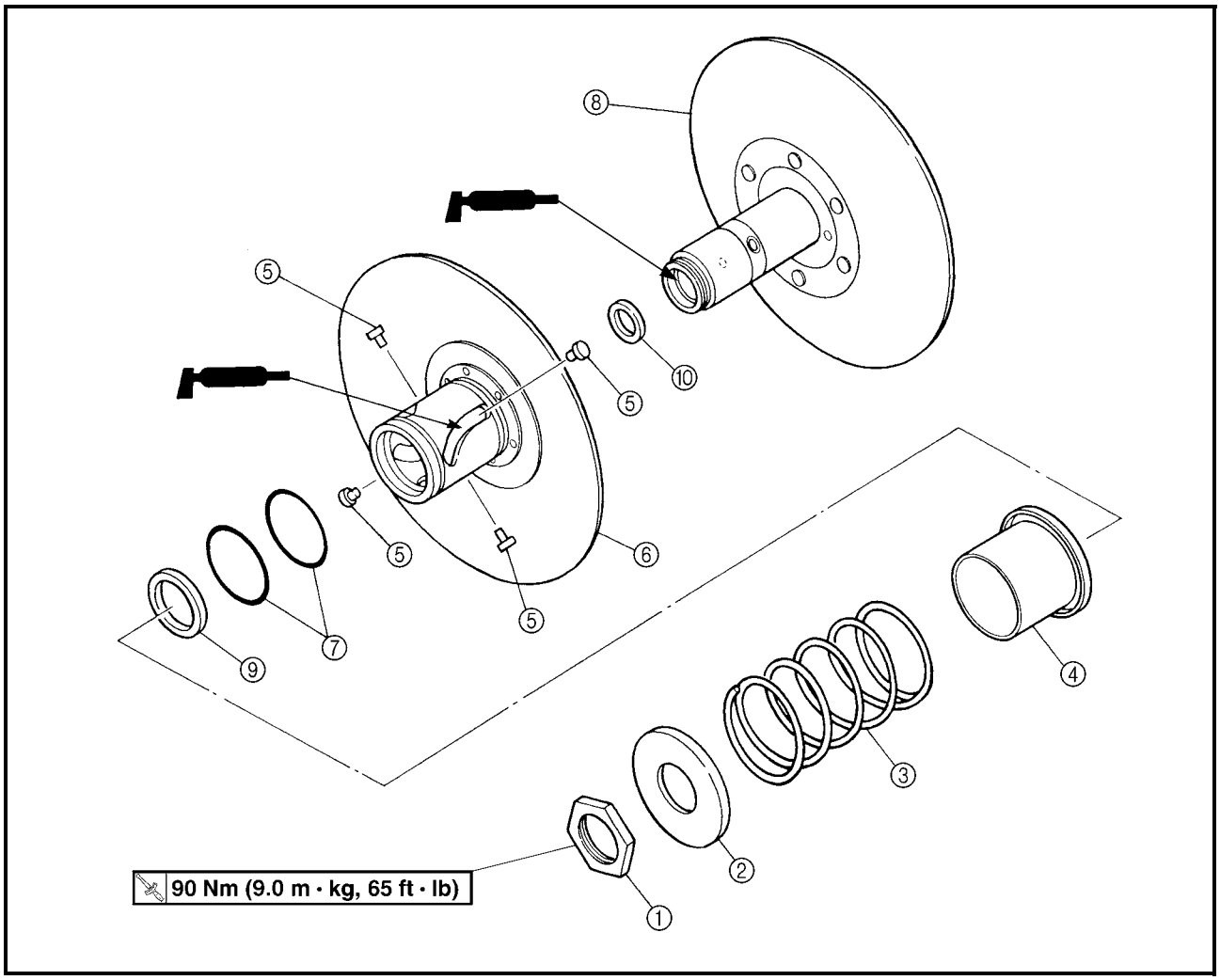

Order	Job name/Part name	Q'ty	Remarks
	Disassembly the secondary sheave		Remove the parts in the order below.
①	Nut	1	Refer to "DISASSEMBLING/ASSEMBLING SECONDARY SHEAVE".
②	Spring seat	1	
③	Compression spring	1	
④	Spring seat	1	
⑤	Guide pin	4	
⑥	Secondary sliding sheave	1	
⑦	O-ring	2	
⑧	Secondary fixed sheave	1	
⑨	Oil seal	1	
⑩	Oil seal	1	
			For assembly, reverse the disassembly procedure.

Downloaded from www.Manualslib.com manuals search engine

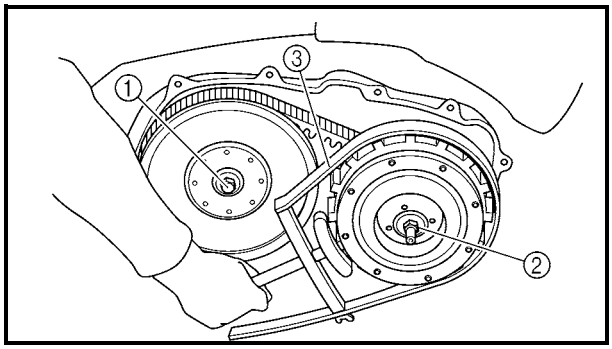

REMOVING THE PRIMARY AND SECONDARY SHEAVES

1.Loosen:
- Nut (secondary sheave) ①
- Nut (primary sheave) ②

NOTE:
- Use the sheave holder ③ to hold the primary sheave.
- First, loosen the nut (secondary sheave) ②, then loosen the nut (primary sheave) ①.

Sheave holder:
P/N. YU-01880, 90890-01701

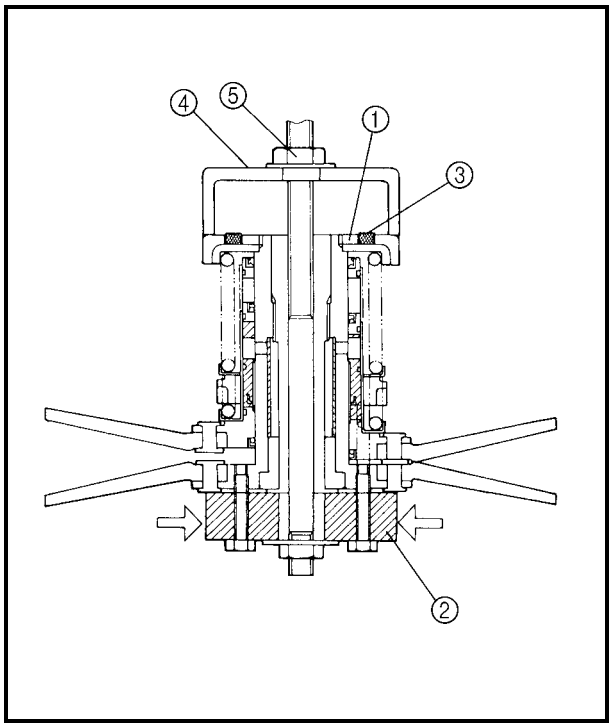

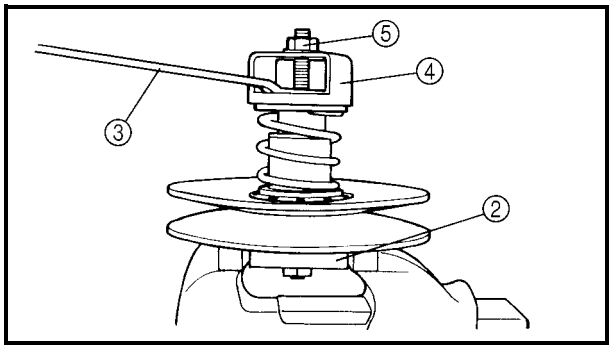

DISASSEMBLING THE SECONDARY SHEAVE

1.Remove:
- Nut ①

****

Removing steps:
- Attach the sheave fixed block ②, locknut wrench ③ and sheave spring compressor ④ to the secondary sheave assembly.

Sheave fixed block:
P/N. YM-04135, 90890-04135
Locknut wrench:
P/N. 90890-01348
Sheave spring compressor:
P/N. YM-04134, 90890-04134

- Place the sheave fixed block in a vise and secure it.
- Tighten the sheave spring compressor nut ⑤ and compress the spring.
- Loosen the nut ① with the locknut wrench ③.
- Remove the nut ①.
- Remove the sheave spring compressor and locknut wrench.

****

Downloaded from www.Manualslib.com manuals search engine

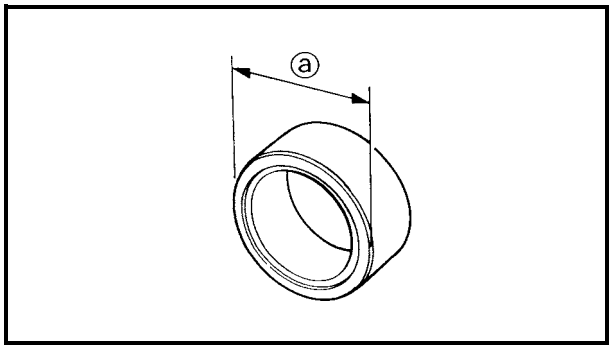

CHEKING THE PRIMARY SHEAVE

1.Check:
- Weight outside diameter ⓐ
  Out of specification → Replace the weight.

Weight outside diameter:
30 mm (1.18 in)
<Limit>: 29.5 mm (1.16 in)

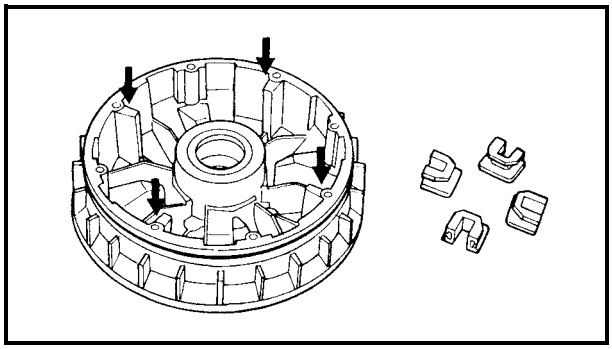

2.Check:
- Primary puller slider
- Primary sliding sheave splines
  Wear/cracks/damage → Replace.
- Spacer
- Primary puller cam
  Cracks/damage → Replace.

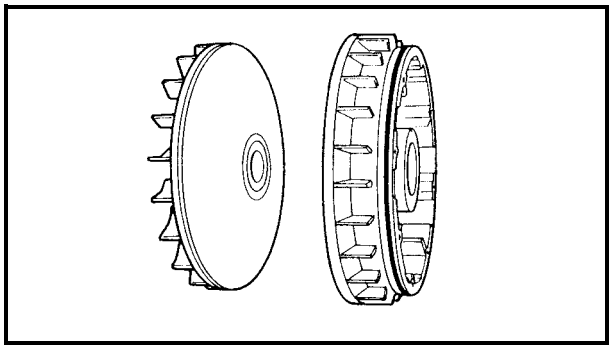

3.Check:
- Primary sliding sheave
- Primary fixed sheave
  Cracks/damage → Replace.

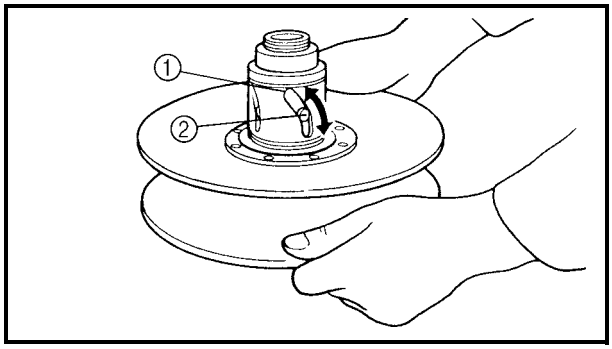

CHECKING THE SECONDARY SHEAVE

1.Check:
- Secondary fixed sheave smooth operation
- Secondary sliding sheave smooth operation
  Scratches/damage → Replace as a set.

2.Check:
- Torque cam groove ①
  Wear/damage → Replace.

3.Check:
- Guide pin ②
  Wear/damage → Replace.

4.Check:
- Secondary sheave spring
  Damage → Replace.

5.Measure:
- Secondary sheave spring free length ⓐ
  Out of specification → Replace the secondary sheave spring.

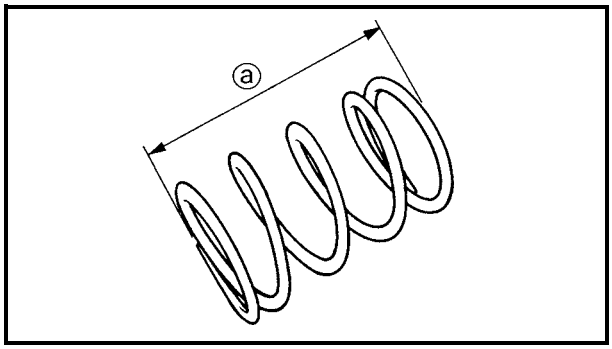

Free length:
124.2 mm (4.89 in)
<Limit>: 121.2 mm (4.77 in)

Downloaded from www.Manualslib.com manuals search engine

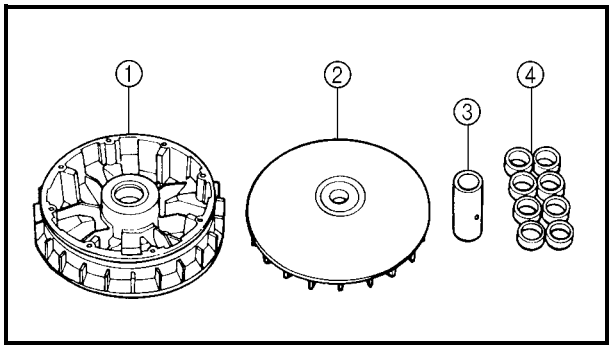

ASSEMBLING THE PRIMARY SHEAVE

1.Clean:
- Primary sliding sheave face ①
- Primary fixed sheave face ②
- Collar ③
- Weight ④
- Primary sliding sheave cam face

NOTE:
Remove any excess grease.

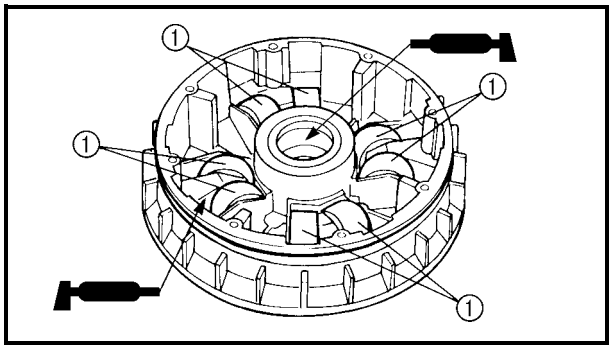

2.Install:
- Weight ①

NOTE:
- Apply Yamaha Grizzly grease (90 g) to the whole outer surface of the weight and install.
- Apply Yamaha Grizzly grease to the inner surface of the collar.
- Apply Yamaha Grizzly grease to the inner surface of the primary sliding sheave.

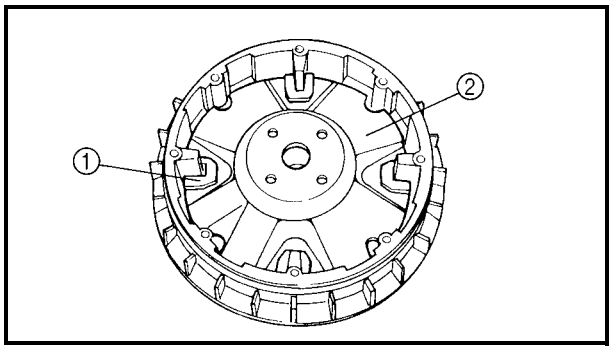

3.Install:
- Spacer
- Slider ①
- Cam ②
- Primary sliding sheave cap

	3 Nm (0.3 m • kg, 2.2 ft • lb)

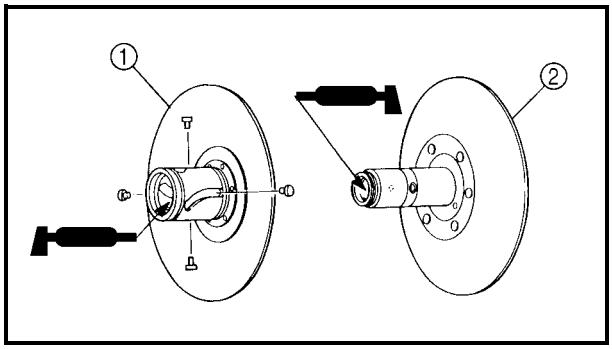

ASSEMBLING THE SECONDARY SHEAVE

1.Apply:
- BEL-RAY assembly lube®
  (to the secondary sliding sheave ① inner surface and oil seals)
- BEL-RAY assembly lube®
  (to the bearings, oil seals and inner surface of the secondary fixed sheave ②)

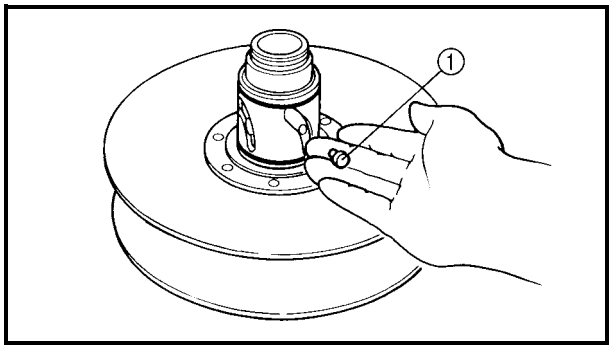

2.Install:
- Guide pin ①

Downloaded from www.Manualslib.com manuals search engine

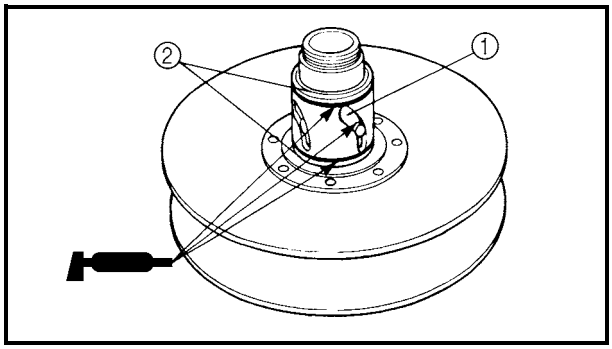

3.Apply:
- BEL-RAY assembly lube®
  (to the guide pin sliding groove ①, and O-ring ② New)

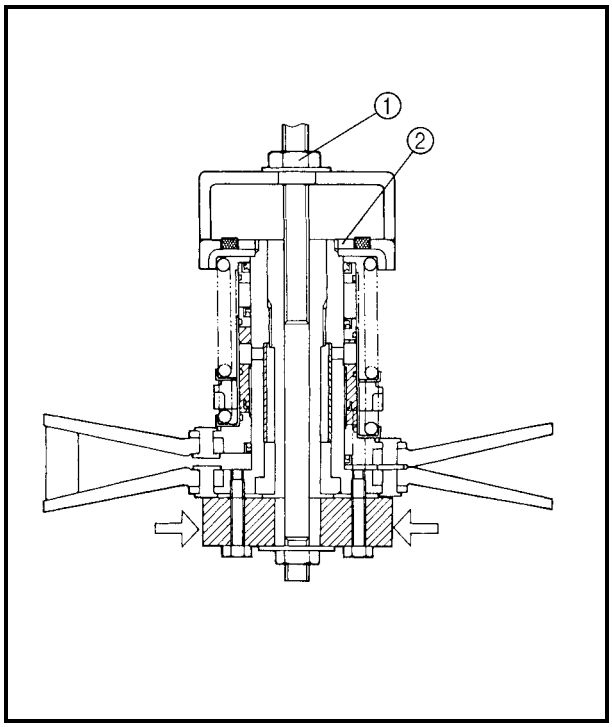

4.Install:
- Spring seat
- Compression spring
- Spring seat
- Nut

****

Installing steps:

- Attach the sheave fixed block, locknut wrench and sheave spring compressor to the secondary sheave assembly.

Sheave fixed block:
P/N. YM-04135, 90890-04135
Locknut wrench:
P/N. 90890-01348
Sheave spring compressor:
P/N. YM-04134, 90890-04134

- Place the sheave fixed block in a vise and secure it.
- Tighten the sheave spring compressor nut ① and compress the spring.
- Install the nut ② and tighten it to the specified torque using the locknut wrench.

Nut:
90 Nm (9.0 m • kg, 65 ft • lb)

- Remove the sheave spring compressor, locknut wrench, and sheave fixed block.

****

Downloaded from www.Manualslib.com manuals search engine

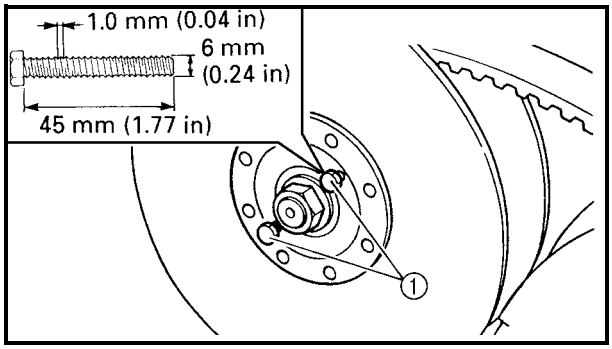

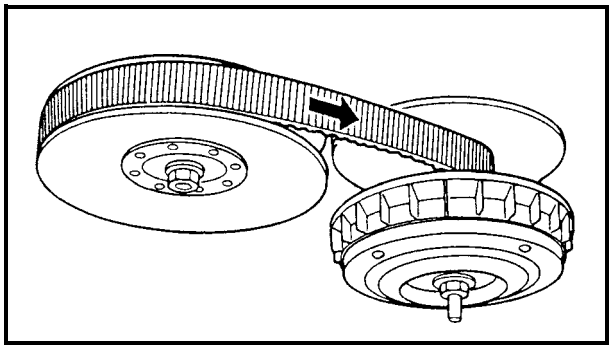

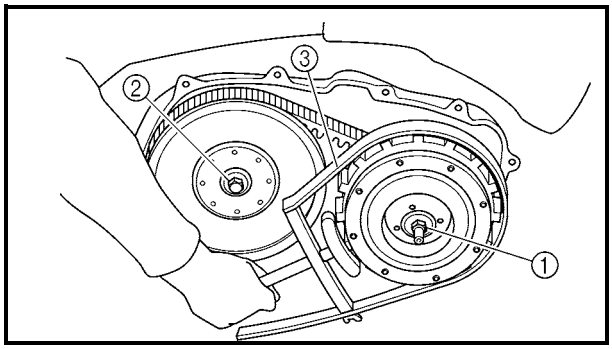

INSTALLING THE PRIMARY AND SECONDARY SHEAVES

1.Install:
- Secondary sheave assembly
- V-belt
- Primary sheave assembly

NOTE:
- Tightening the bolts ① will push the secondary sliding sheave away, causing the gap between the secondary fixed and sliding sheaves to widen.
- Install the V-belt so that its arrow faces the direction show in the illustration.

2.Tighten:
- Nut (primary sheave) ①

100 Nm (10.0 m • kg, 72 ft • lb)

- Nut (secondary sheave) ②

120 Nm (12.0 m • kg, 85 ft • lb)

NOTE:
- Use the sheave holder ③ to hold the primary sheave.
- First, tighten the nut (primary sheave) ①, then tighten the nut (secondary sheave) ②.

Sheave holder:
P/N. YU-01880, 90890-01701

Downloaded from www.Manualslib.com manuals search engine

CLUTCH

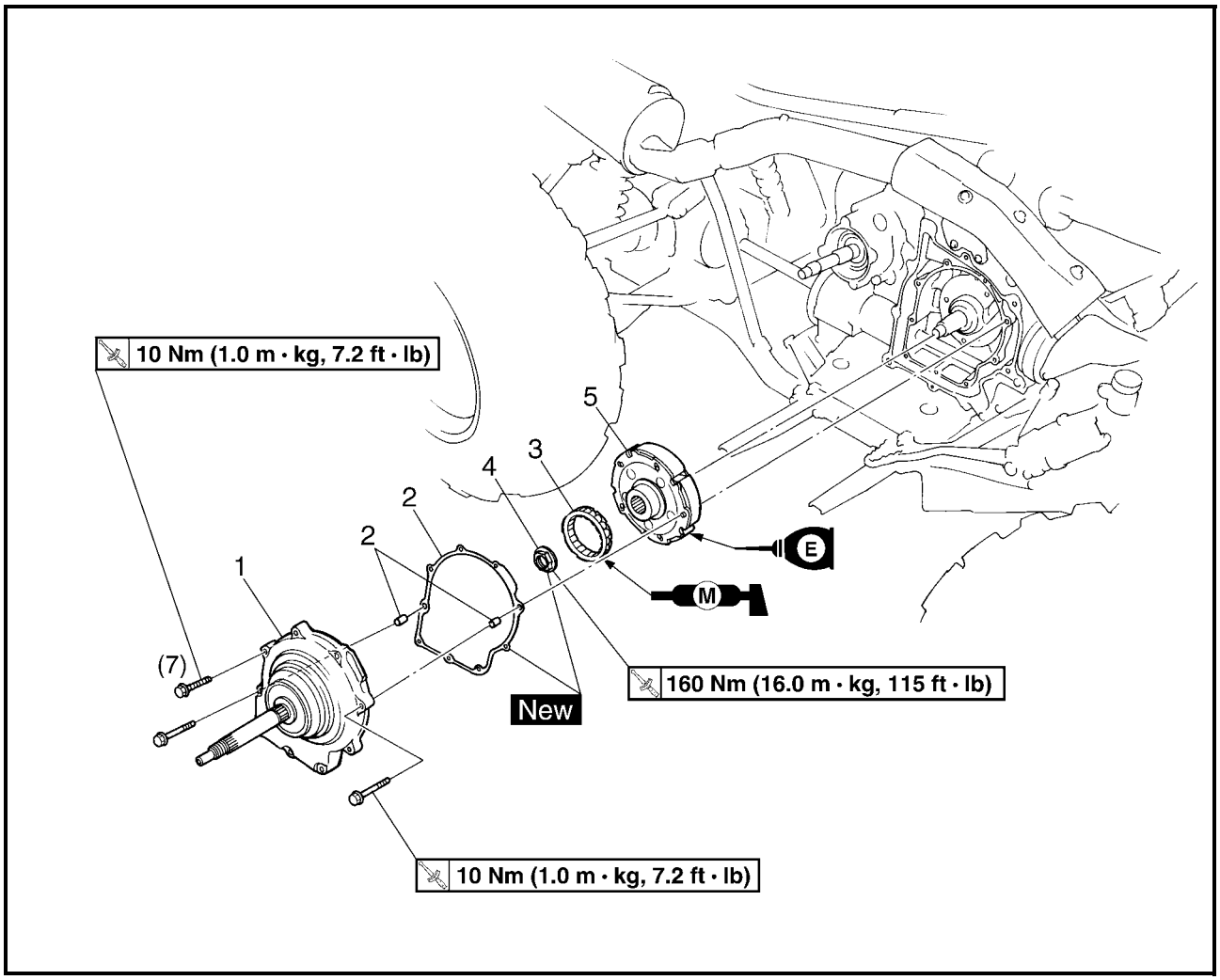

Order	Job name/Part name	Q'ty	Remarks
	Removing the clutch		Remove the parts in the order below.
	Primary and secondary sheaves		Refer to "PRIMARY AND SECONDARY SHEAVES".
1	Clutch housing assembly	1	Refer to "REMOVING AND INSTALLING THE CLUTCH".
2	Gasket/dowel pin	1/2	
3	One-way clutch bearing	1	
4	Nut	1	
5	Clutch carrier assembly	1	
			For installation, reverse the removal procedure.

Downloaded from www.Manualslib.com manuals search engine

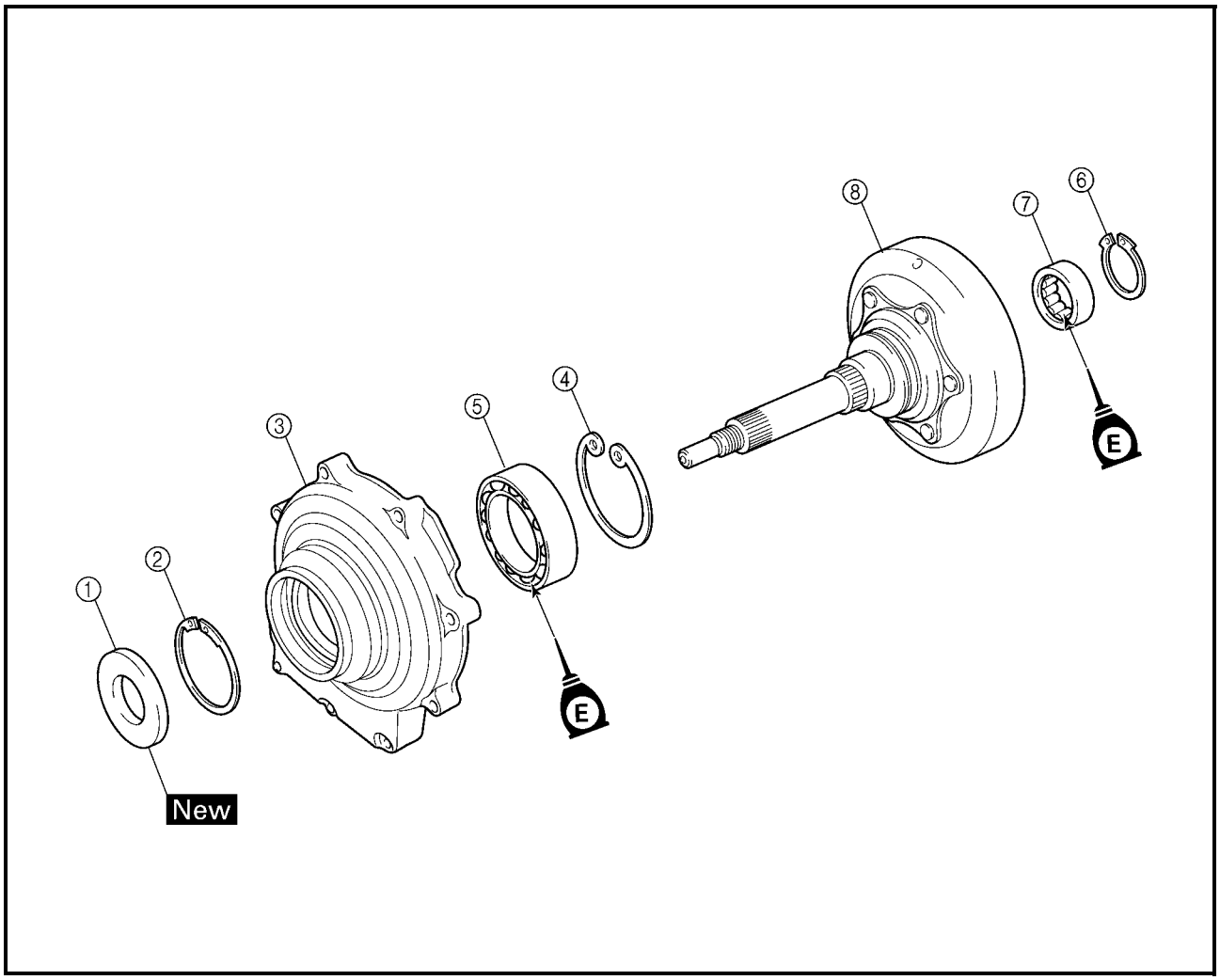

Order	Job name/Part name	Q'ty	Remarks
	Disassembling the clutch housing		Remove the parts in the order below.
①	Oil seal	1	
②	Circlip	1	
③	Bearing housing	1	
④	Circlip	1	
⑤	Bearing	1	
⑥	Circlip	1	
⑦	Bearing	1	
⑧	Clutch housing	1	
			For assembly, reverse the disassembly procedure.

Downloaded from www.Manualslib.com manuals search engine

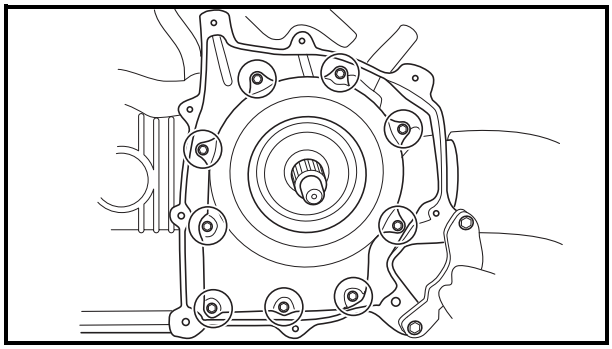

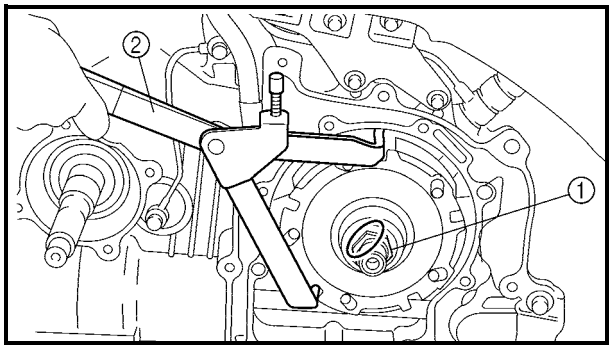

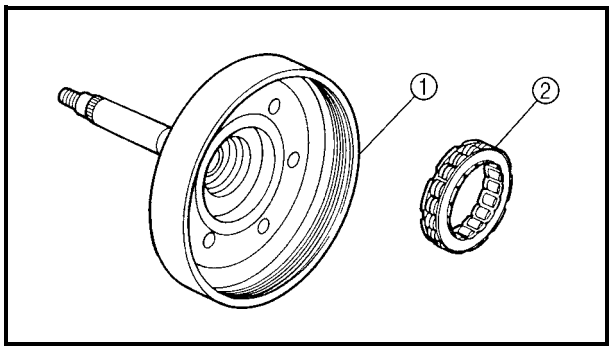

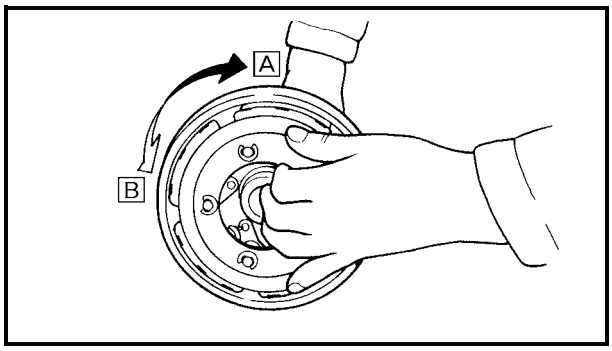

REMOVING THE CLUTCH

1.Remove:
- Clutch housing assembly
- Gasket
- Dowel pins

NOTE:
Working in crisscross pattern, loosen each bolt 1/4 of a turn. Remove them after all of them are loosened.

2.Straighten:
- Punched portion of the nut ①.

3.Remove:
- Nut ①

NOTE:
Use a clutch holding tool ② to hold the clutch carrier assembly.

	Clutch holding tool: **P/N. YM-91042, 90890-04086**

CHECKING THE CLUTCH

1.Check:
- Clutch housing ①
  Heat damage/wear/damage → Replace.
- One-way clutch bearing ②
  Chafing/wear/damage → Replace.

NOTE:
- Replace the one-way clutch assembly and clutch housing as a set.
- The one-way clutch bearing must be installed with the flange side facing in.

****

Checking steps:
- Install the one-way clutch bearing and clutch carrier assembly to the clutch housing and hold the clutch carrier assembly.
- When turning the clutch housing clockwise [A], the clutch housing should turn freely.
  If not, the one-way clutch assembly is faulty. Replace it.
- When turning the clutch housing counter-clockwise [B], the clutch housing and crank-shaft should be engaged.
  If not, the one-way clutch assembly is faulty. Replace it.

****

Downloaded from www.Manualslib.com manuals search engine

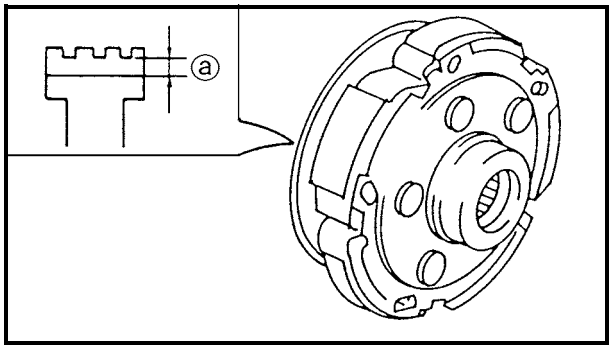

2.Check:
- Clutch shoe
  Heat damage → Replace.

3.Measure:
- Clutch shoe thickness
  Out of specification → Replace.

Clutch shoe thickness:
1.5 mm (0.06 in)
Clutch shoe wear limit ⓐ:
1.0 mm (0.04 in)

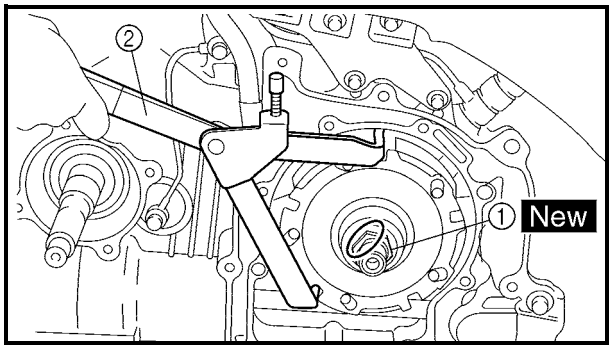

INSTALLING THE CLUTCH

1.Install:
- Collar
- Clutch carrier assembly
- Nut ① New **160 Nm (16.0 m • kg, 115 ft • lb)**

NOTE:
Use a clutch holding tool ② to hold the clutch carrier assembly.

Clutch holding tool:
P/N. YM-91042, 90890-04086

2.Lock the threads with a drift punch.

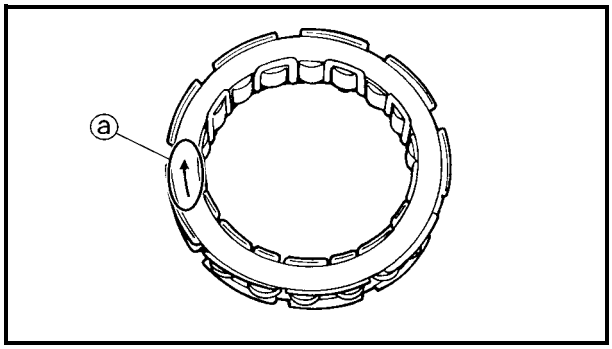

3.Install:
- One-way clutch bearing

NOTE:
The one-way clutch bearing should be installed in the clutch carrier assembly with the arrow mark ⓐ facing toward the clutch housing.

Downloaded from www.Manualslib.com manuals search engine

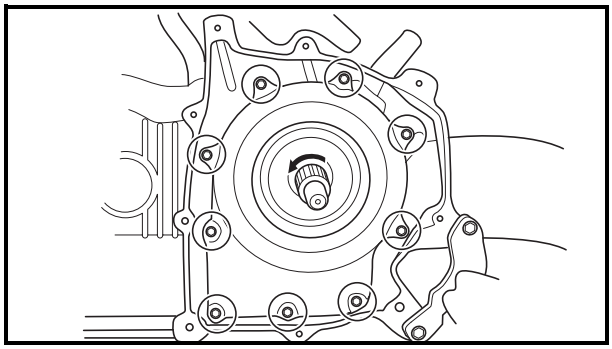

4.Install:
- Dowel pins
- Gasket New
- Clutch housing assembly

10 Nm (1.0 m • kg, 7.2 ft • lb)

NOTE:
- Tighten the bolts in stages, using a criss-cross pattern.
- After tightening the bolts, check that the clutch housing assembly to counterclockwise rotates smoothly.

Downloaded from www.Manualslib.com manuals search engine

CRANKCASE

STARTER MOTOR, TIMING CHAIN AND OIL FILTER

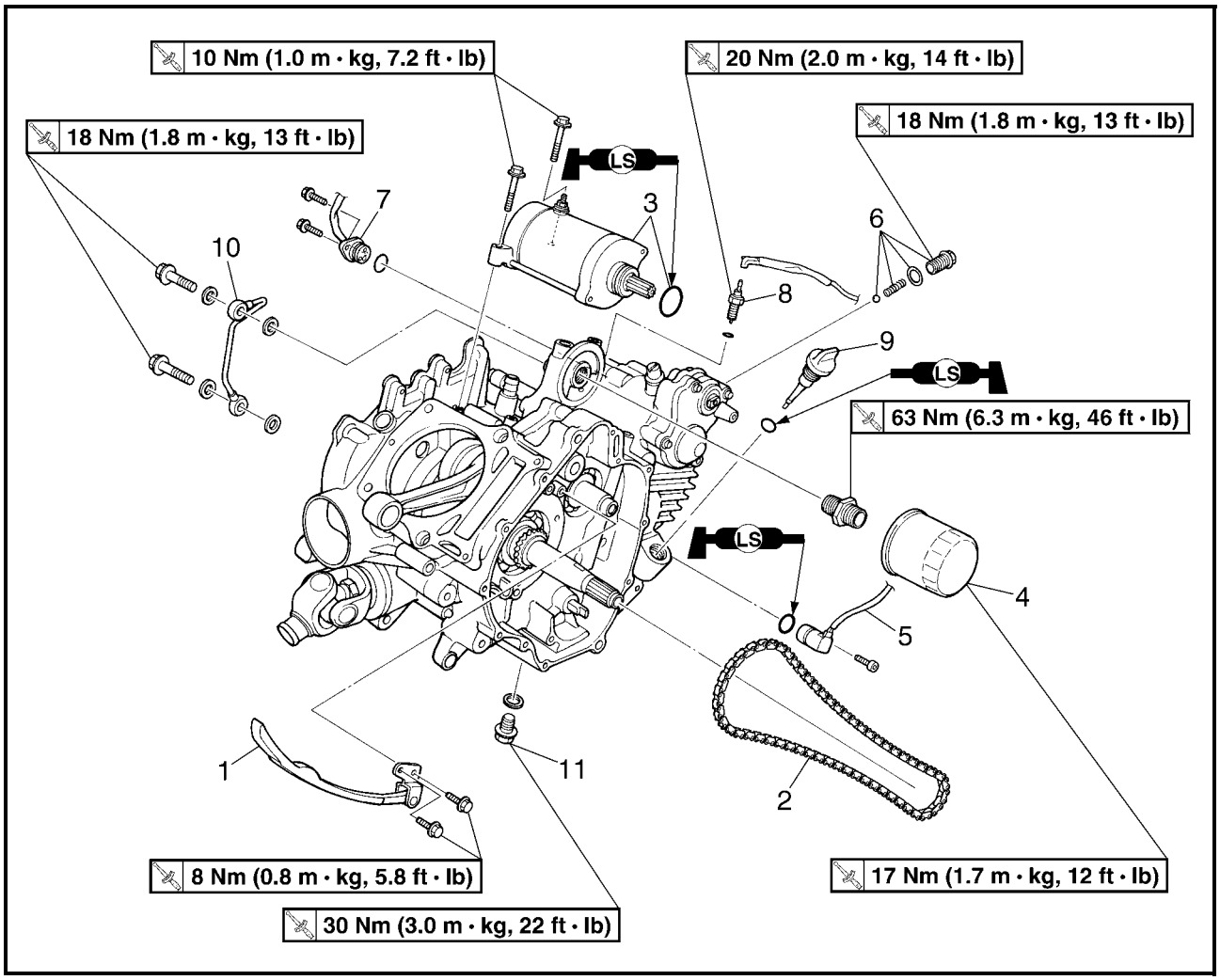

Order	Job name/Part name	Q'ty	Remarks
	Remove the starter motor, timing chain and oil filter		Remove the parts in the order below.
	Engine assembly		Refer to "ENGINE REMOVAL".
	Cylinder head		Refer to "CAMSHAFT AND CYLINDER HEAD".
	Cylinder and piston		Refer to "CYLINDER AND PISTON".
	Recoil starter and CDI rotor		Refer to "RECOIL STARTER AND AC MAGNETO".
	Primary and secondary sheaves		Refer to "PRIMARY AND SECONDARY SHEAVES".
	Clutch carrier assembly		Refer to "CLUTCH".
1	Timing chain guide	1	
2	Timing chain	1	
3	Starter motor/O-ring	1/1	

Downloaded from www.Manualslib.com manuals search engine

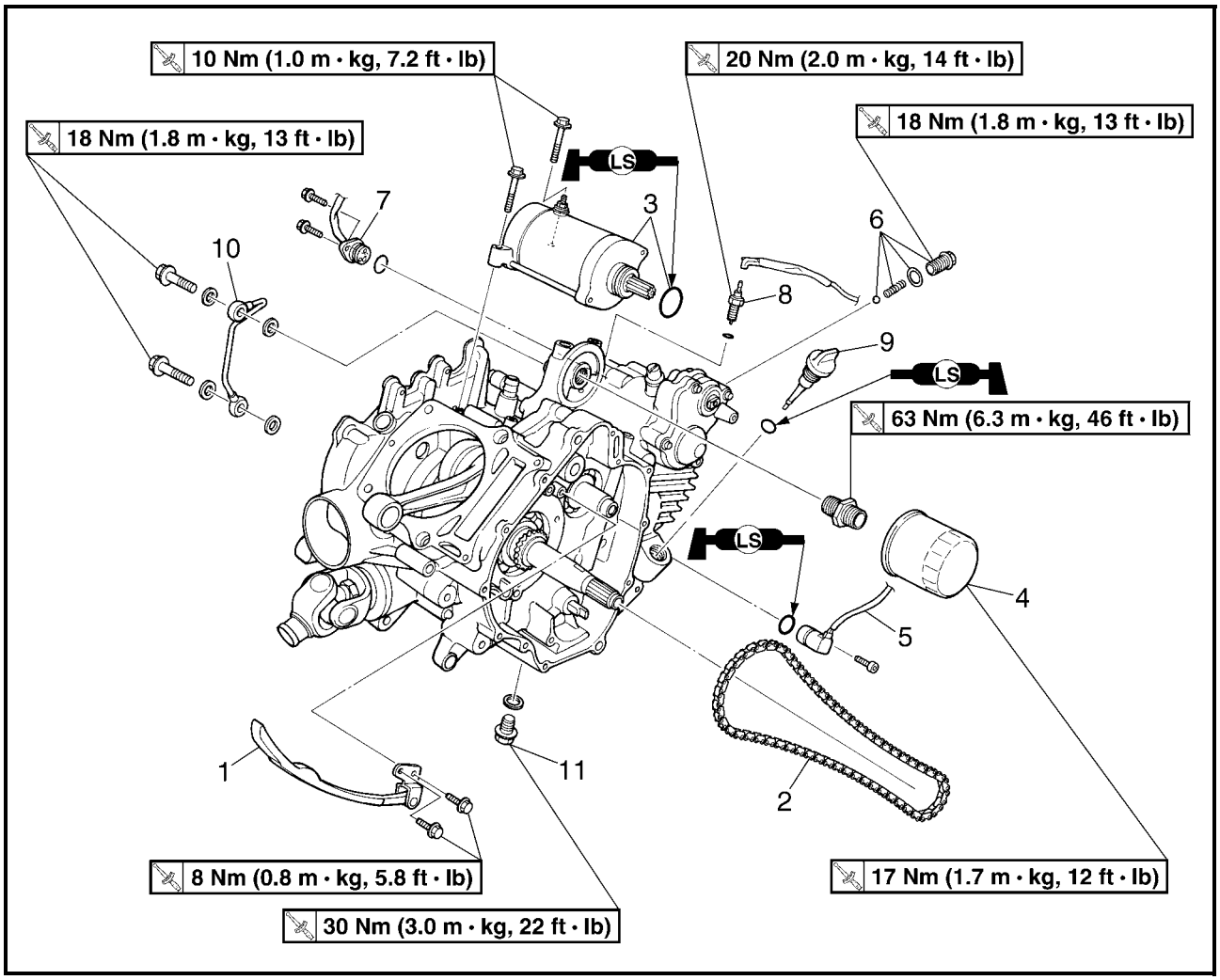

Order	Job name/Part name	Q'ty	Remarks
4	Oil filter	1	
5	Speed sensor	1	
6	Shift cam stopper	1	
7	Gear position switch	1	
8	Reverse switch	1	
9	Oil filler cap	1	
10	Oil delivery pipe	1	
11	Drain plug	1	
			For installation, reverse the removal procedure.

Downloaded from www.Manualslib.com manuals search engine

CRANKCASE

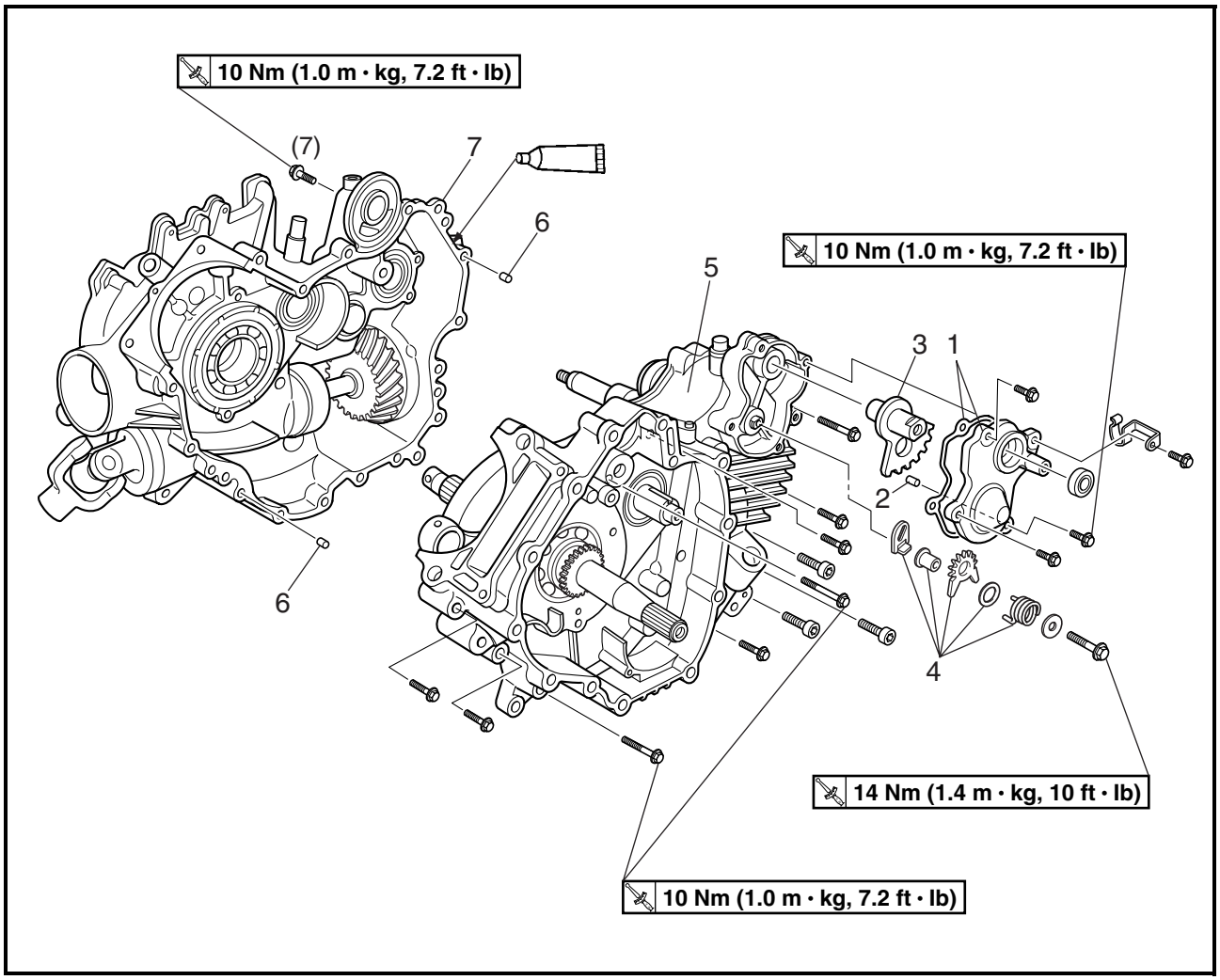

Order	Job name/Part name	Q'ty	Remarks
	Separating the crankcase		Remove the parts in the order below.
1	Shift lever cover/gasket	1/1	Refer to "INSTALLING SHIFT LEVER".
2	Dowel pin	1	
3	Shift lever 1/O-ring	1/1	
4	Shift lever 2 assembly	1	
5	Crankcase (left)	1	Refer to "SEPARATING/ASSEMBLING THE CRANKCASE".
6	Dowel pin	2	
7	Crankcase (right)	1	
			For installation, reverse the removal procedure.

Downloaded from www.Manualslib.com manuals search engine

CRANKCASE BEARING

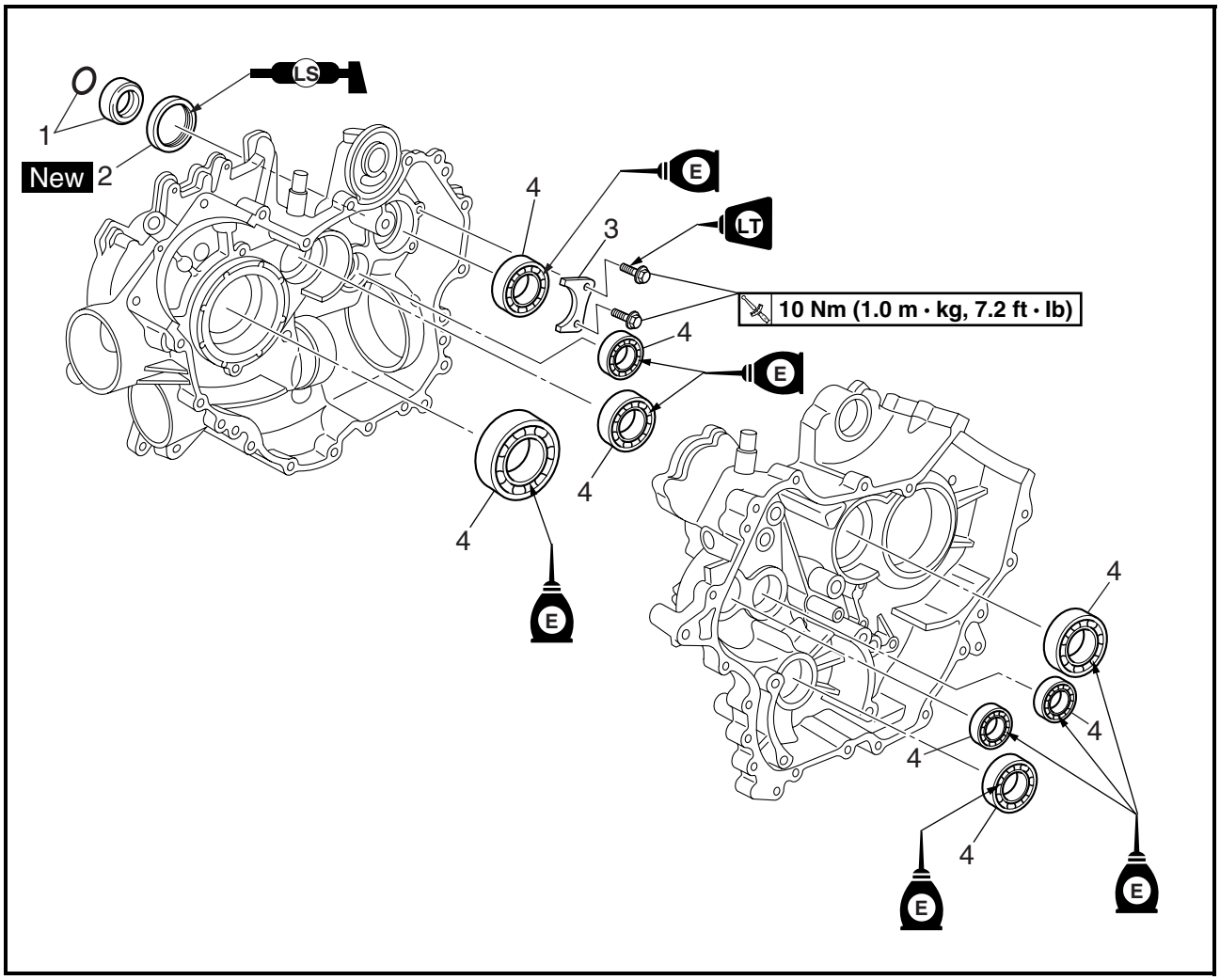

Order	Job name/Part name	Q'ty	Remarks
	Removing the crankcase bearing		Remove the parts in the order below.
	Crankshaft and oil pump		Refer to "CRANKSHAFT AND OIL PUMP".
	Transmission		Refer to "TRANSMISSION".
	Middle drive/driven shaft		Refer to "MIDDLE GEAR".
1	O-ring/collar	1/1	
2	Oil seal	1	
3	Bearing retainer	1	
4	Bearing	8	
			For installation, reverse the removal procedure.

Downloaded from www.Manualslib.com manuals search engine

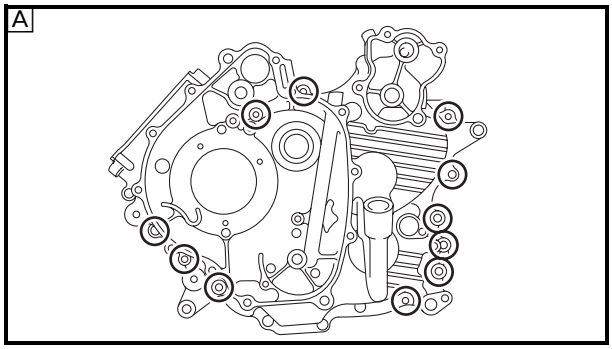

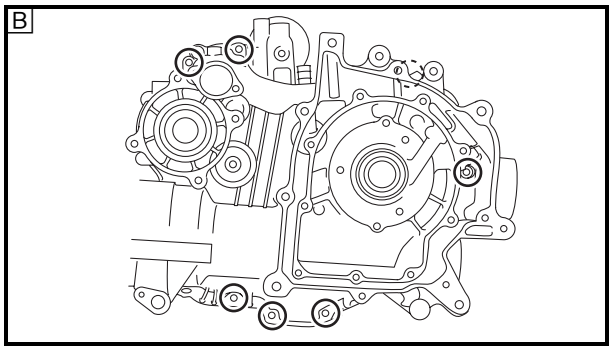

SEPARATING THE CRANKCASE

1.Separate:
- Left crankcase
- Right crankcase

****

Separation steps:

- Remove the crankcase bolts.

NOTE:

- Loosen each bolt 1/4 of a turn at a time and after all the bolts are loosened, remove them.
- Loosen the bolts in stages, using a criss-cross pattern.

A Left crankcase
B Right crankcase

- Remove the left crankcase.

CAUTION:

Use a soft hammer to tap on one side of the crankcase. Tap only on reinforced portions of the crankcase. Do not tap on the crankcase mating surfaces. Work slowly and carefully. Make sure that the crankcase halves separate evenly.

- Remove the dowel pins.

****

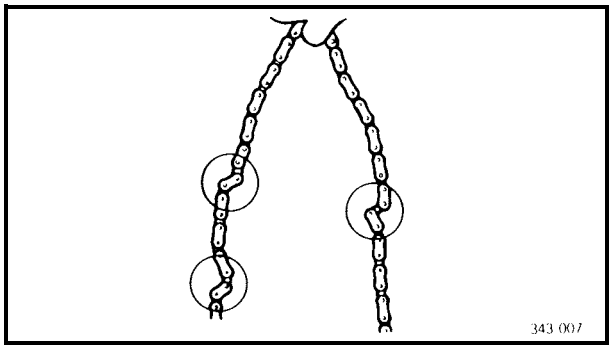

CHECKING THE TIMING CHAIN AND GUIDE

1.Check:
- Timing chain
  Cracks/stiff → Replace the timing chain and camshaft sprocket as a set.

2.Check:
- Intake side timing chain guide
  Wear/damage → Replace.

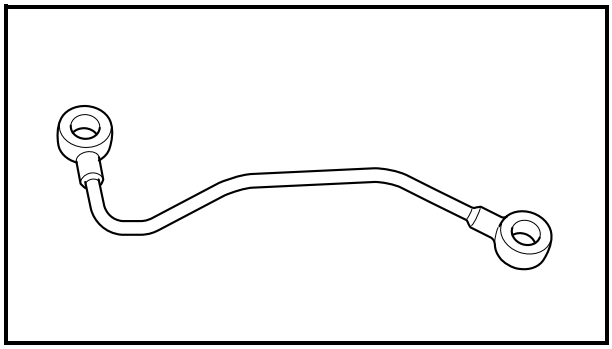

CHECKING THE OIL DELIVERY PIPE

1.Check:
- Oil delivery pipe
  Cracks/damage → Replace.
  Clogged → Blow out with compressed air.

Downloaded from www.Manualslib.com manuals search engine

CHECKING THE CRANKCASE

1. Thoroughly wash the case halves in a mild solvent.
2. Clean all the gasket mating surfaces and crankcase mating surfaces thoroughly.
3. Check:
   - Crankcase
     Cracks/damage → Replace.
   - Oil delivery passages
     Clogged → Blow out with compressed air.

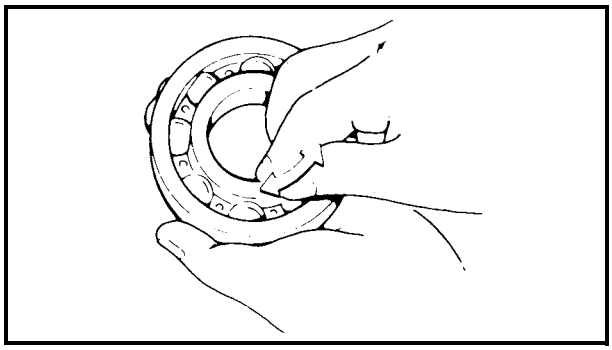

CHECKING THE BEARINGS

1. Check:
   - Bearing
     Clean and lubricate, then rotate the inner race with a finger.
     Roughness → Replace.

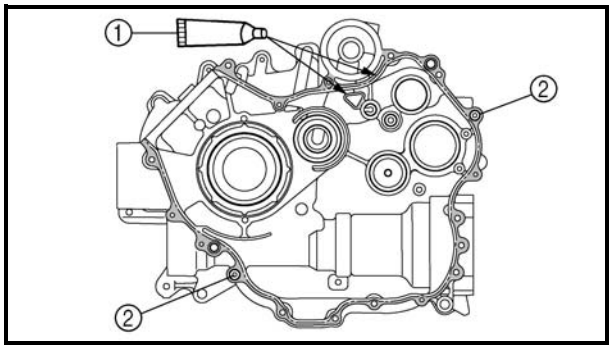

ASSEMBLING THE CRANKCASE

1. Apply:
   - Sealant (Quick Gasket®) ①
     (to the mating surfaces of both case halves)

Sealant (Quick Gasket®):
P/N. ACC-11001-05-01
Yamaha bond No. 1215:
P/N. 90890-85505

2. Install:
   - Dowel pin ②

3. Fit the left crankcase onto the right case. Tap lightly on the case with a soft hammer.

CAUTION:

Before installing and torquing the crankcase holding bolts, be sure to check whether the transmission is functioning properly by manually rotating the shift cam in both directions.

Downloaded from www.Manualslib.com manuals search engine

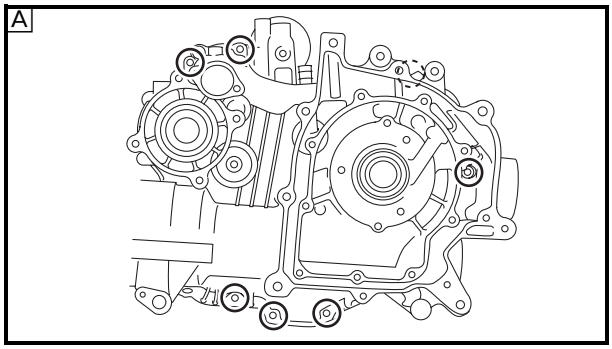

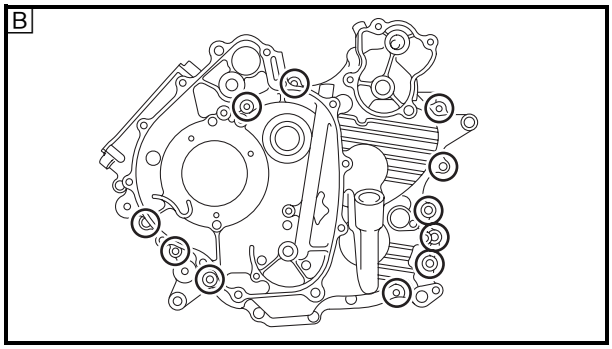

4.Tighten:
- Crankcase bolts
  (follow the proper tightening sequence)

10 Nm (1.0 m • kg, 7.2 ft • lb)

A Right crankcase
B Left crankcase

NOTE:
Tighten the bolts in stages, using a crisscross pattern.

5.Apply:
- 4-stroke engine oil
  (to the crank pin, bearing and oil delivery hole)

6.Check:
- Crankshaft and transmission operation
  Unsmooth operation → Repair.

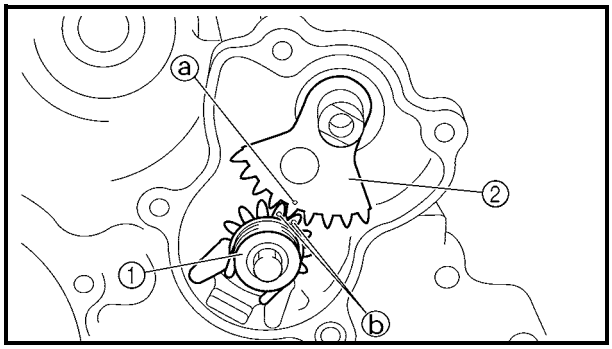

INSTALLATING THE SHIFT LEVER

1.Install:
- Shift lever 2 assembly ①

14 Nm (1.4 m • kg, 10 ft • lb)

- Shift lever 1 ②

NOTE:
When installing the shift lever 1, align the punch mark ⓐ on the shift lever 1 with the punch marks ⓑ on the shift lever 2.

Downloaded from www.Manualslib.com manuals search engine

CRANKSHAFT AND OIL PUMP

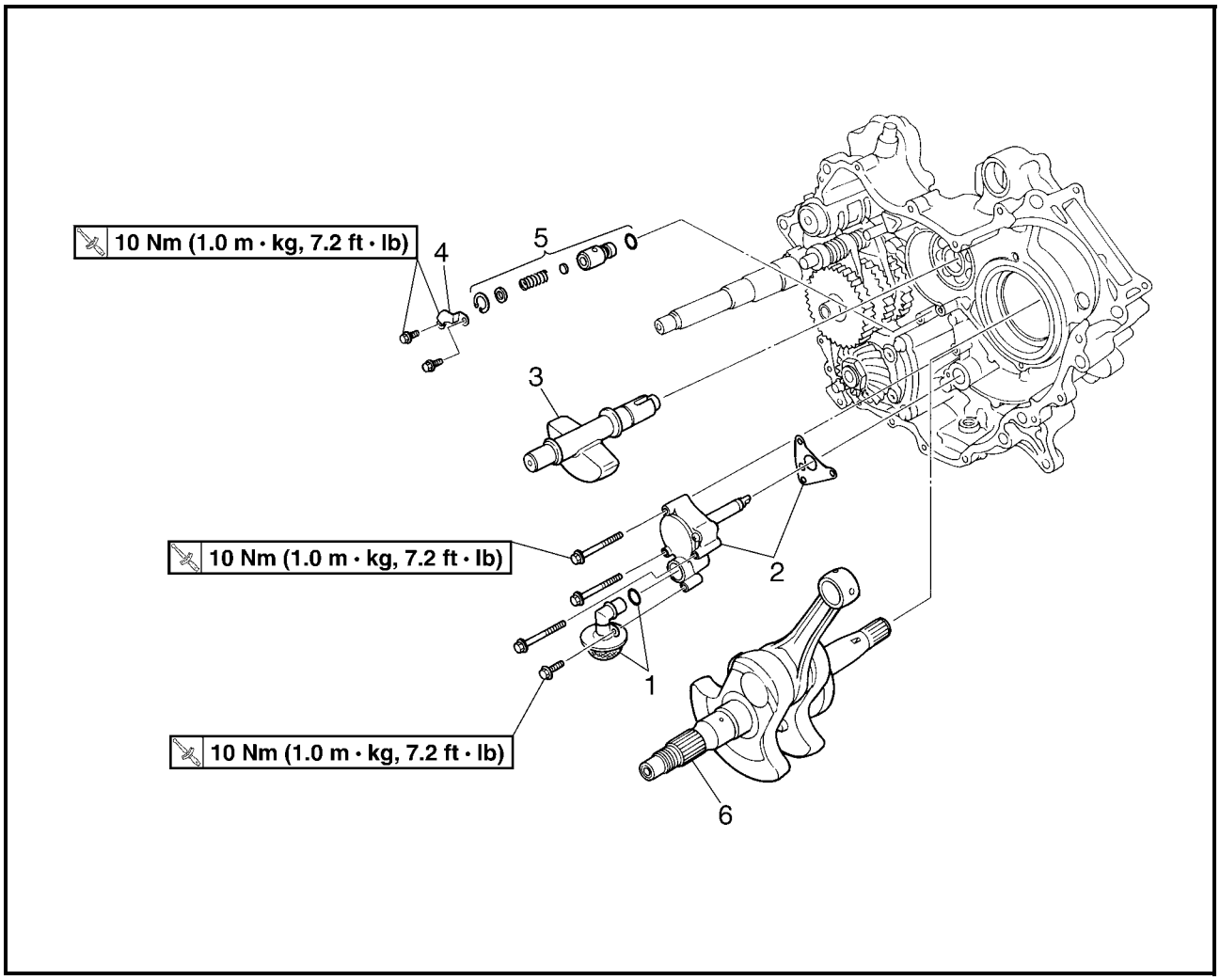

Order	Job name/Part name	Q'ty	Remarks
	Removing the crankshaft and oil pump		Remove the parts in the order below.
	Crankcase separation		Refer to "CRANKCASE".
1	Oil strainer/O-ring	1/1	
2	Oil pump assembly/gasket	1/1	
3	Balancer	1	Refer to "REMOVING THE CRANKSHAFT/INSTALLING THE CRANKSHAFT AND BALANCER".
4	Plate	1	
5	Relief valve assembly	1	
6	Crankshaft	1	
			For installation, reverse the removal procedure.

Downloaded from www.Manualslib.com manuals search engine

OIL PUMP

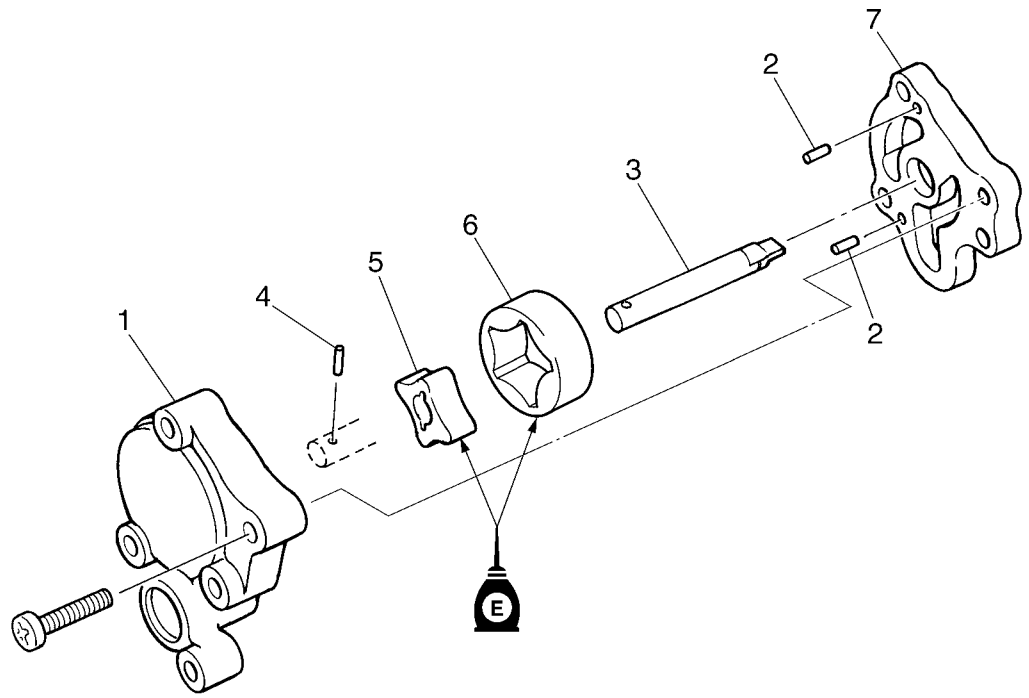

Order	Job name/Part name	Q'ty	Remarks
	Disassembling the oil pump		Remove the parts in the order below.
1	Rotor cover	1	
2	Pin	2	
3	Shaft	1	
4	Pin	1	
5	Inner rotor	1	
6	Outer rotor	1	
7	Oil pump housing	1	
			For assembly, reverse the disassembly procedure.

Downloaded from www.Manualslib.com manuals search engine

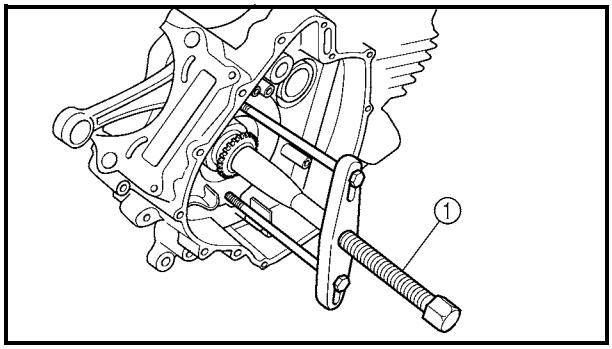

REMOVING THE CRANKSHAFT

1.Remove:
- Crankshaft
  Use a crankcase separating tool ①.

	Crankcase separating tool: **P/N. YU-01135-A, 90890-01135**

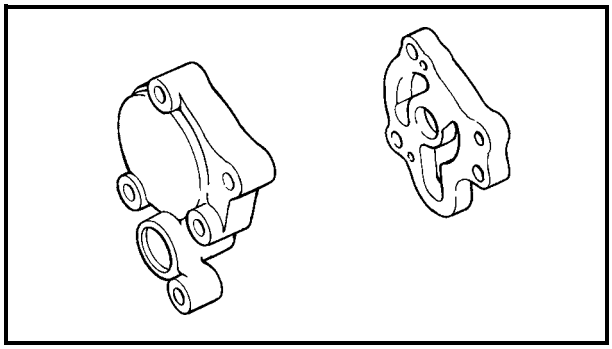

CHECKING THE OIL PUMP

1.Check:
- Rotor housings
- Rotor cover
  Cracks/wear/damage → Replace.

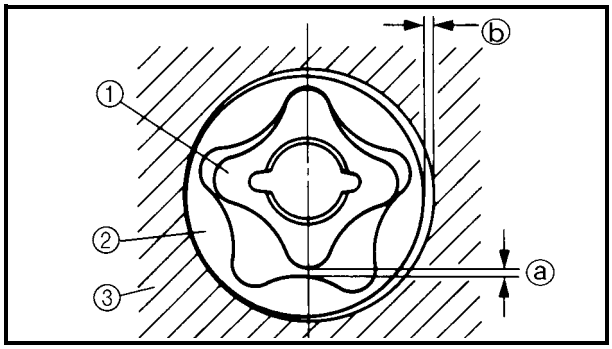

2.Measure:
- Tip clearance ⓐ
  (between the inner rotor ① and the outer rotor ②)
- Side clearance ⓑ
  (between the outer rotor ② and the pump housing ③)
  Out of specification → Replace the oil pump.

	Tip clearance ⓐ: **0.03 ~ 0.10 mm** **(0.0012 ~ 0.0039 in)** **<Limit>: 0.15 mm (0.006 in)** **Side clearance ⓑ:** **0.03 ~ 0.10 mm** **(0.0012 ~ 0.0039 in)** **<Limit>: 0.12 mm (0.005 in)**

3.Check:
- Oil pump operation
  Unsmooth → Repeat steps #1 and #2 or replace the defective parts.

Downloaded from www.Manualslib.com manuals search engine

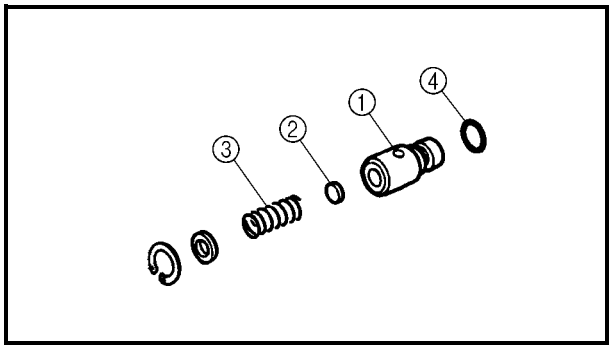

CHECKING THE RELIEF VALVE

1.Check:
- Relief valve body ①
- Relief valve ②
- Spring ③
- O-ring ④

  Damage/wear → Replace the defective parts(s).

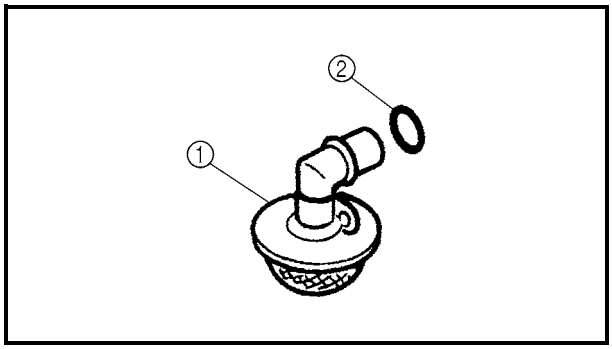

CHECKING THE OIL STRAINER

1.Check:
- Oil strainer ①
- O-ring ②

  Damage → Replace.
  Contaminants → Clean with engine oil.

ASSEMBLING THE OIL PUMP

1.Install:
- Inner rotor
- Outer rotor
- Oil pump shaft
  (with the recommended lubricant)

	Recommended lubricant: **Engine oil**

Downloaded from www.Manualslib.com manuals search engine

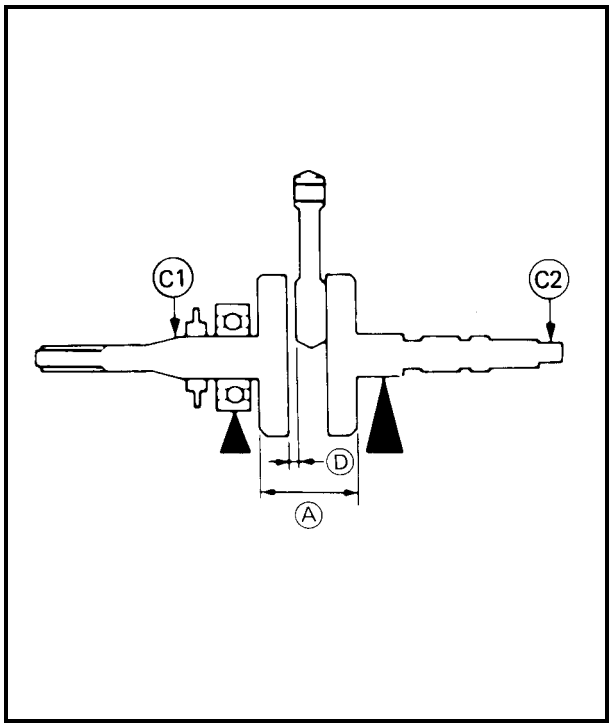

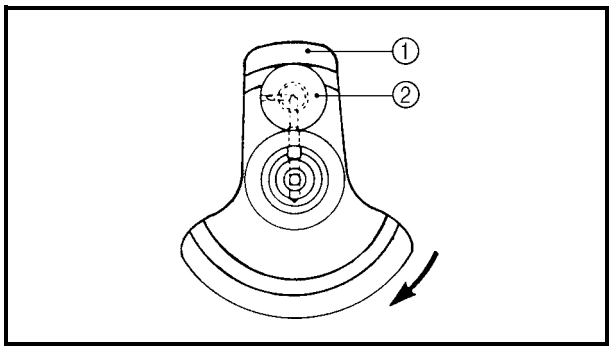

CHECKING THE CRANKSHAFT

1.Measure:

- Crank width Ⓐ
  Out of specification → Replace the crankshaft.

Crank width:
74.95 ~ 75.00 mm
(2.9508 ~ 2.9528 in)

- Side clearance Ⓓ
  Out of specification → Replace the crankshaft.

Big end side clearance:
0.35 ~ 0.65mm
(0.0138 ~ 0.0256 in)
<Limit>: 1.0 mm (0.040 in)

- Runout Ⓒ
  Out of specification → Replace the crankshaft.

Runout limit:
C1: 0.03 mm (0.0012 in)

****

Crankshaft reassembling point:

The crankshaft ① and the crank pin ② oil passages must be properly interconnected with a tolerance of less than 1 mm (0.04 in).

****

CAUTION:

The buffer boss and woodruff key should be replaced when removed from the crankshaft.

Downloaded from www.Manualslib.com manuals search engine

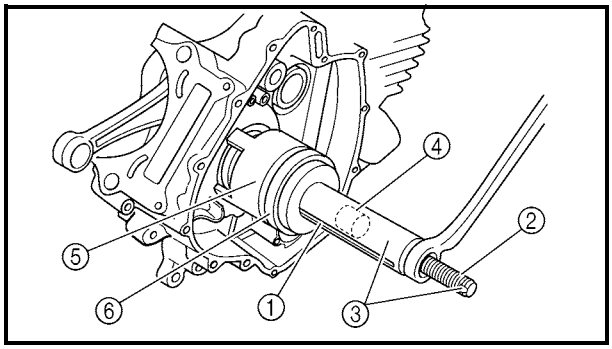

INSTALLING THE CRANKSHAFT AND BALANCER

1.Install:

- Crankshaft

Crankshaft installer pot ①:
P/N. 90890-01274
Crankshaft installer bolt ②:
P/N. 90890-01275
Crankshaft installer set ③:
P/N. YU-90050
Adapter ④:
P/N. YM-90069, 90890-04059
Spacer (crankshaft installer) ⑤:
P/N. YM-91044, 90890-04081
Spacer ⑥:
P/N. 90890-01309

NOTE:

Hold the connecting rod at the Top Dead Center (T.D.C.) with one hand while turning the nut of the installing tool with the other. Operate the installing tool until the crankshaft bottoms against the bearing.

CAUTION:

Apply engine oil to each bearing to protect the crankshaft against scratches and to make installation easier.

Downloaded from www.Manualslib.com manuals search engine

TRANSMISSION

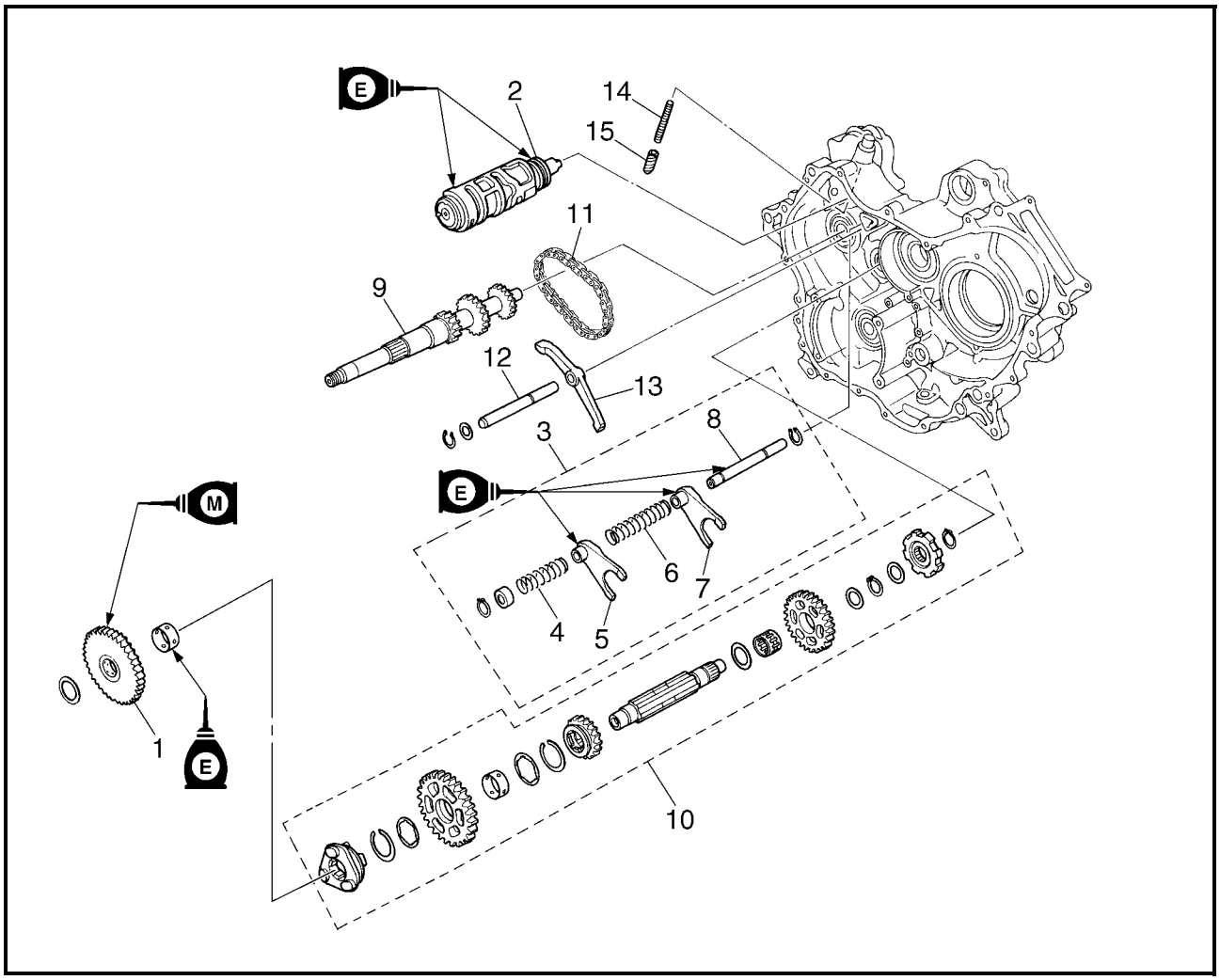

Order	Job name/Part name	Q'ty	Remarks
	Removing the transmission		Remove the parts in the order below.
	Crankcase separation		Refer to "CRANKCASE".
	Middle driven gear		Refer to "MIDDLE GEAR".
1	Low wheel gear	1	
2	Shift cam	1	
3	Shift fork assembly	1	
4	Short spring	1	White painting.
5	Shift fork 1	1	
6	Long spring	1	
7	Shift fork 2	1	
8	Guide bar	1	
9	Secondary shaft	1	
10	Drive axle assembly	1	

Downloaded from www.Manualslib.com manuals search engine

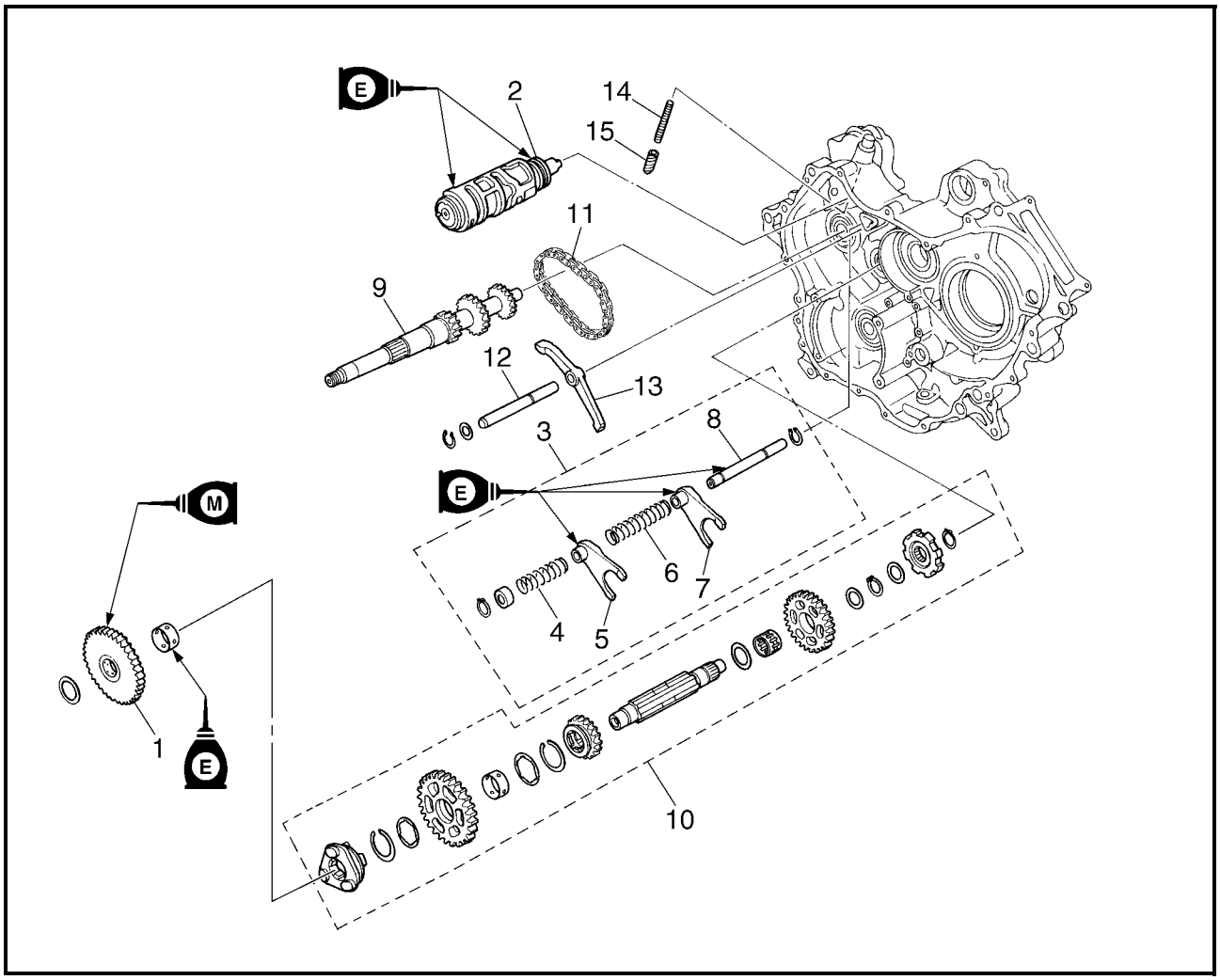

Order	Job name/Part name	Q'ty	Remarks
11	Chain	1	
12	Shaft	1	
13	Stopper lever	1	
14	Spring	1	
15	Stopper cam	1	
			For installation, reverse the removal procedure.

Downloaded from www.Manualslib.com manuals search engine

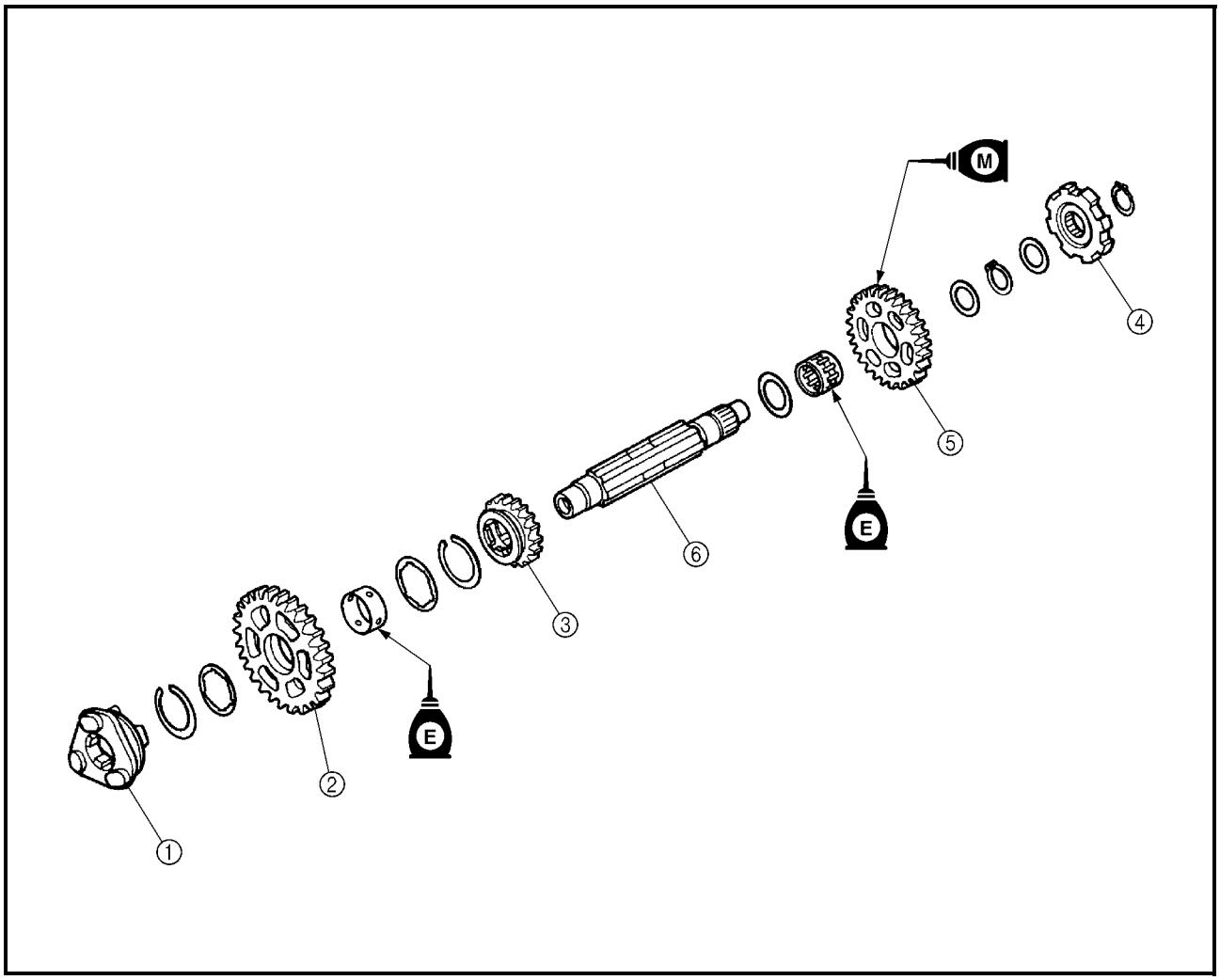

Order	Job name/Part name	Q'ty	Remarks
	Disassembling the drive axle assembly		Remove the parts in the order below.
①	Clutch dog	1	
②	High wheel gear	1	
③	Middle drive gear	1	
④	Stopper wheel	1	
⑤	Driven sprocket	1	
⑥	Drive axle	1	
			For assembly, reverse the disassembly procedure.

Downloaded from www.Manualslib.com manuals search engine

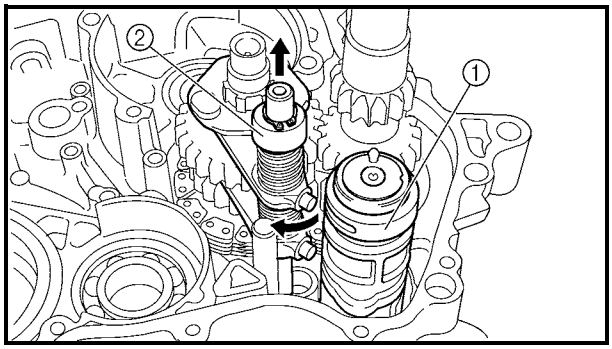

REMOVING THE TRANSMISSION

1.Remove:
- Sift cam ①
- Sift fork assembly ②

****

Removing steps:
- Pull out the guide bar from the left crankcase.
- Push down on the drive shaft, and then slide the shift fork assembly to remove the shift fork cam followers.
- Remove the shift cam.
- Remove the shift fork assembly.

****

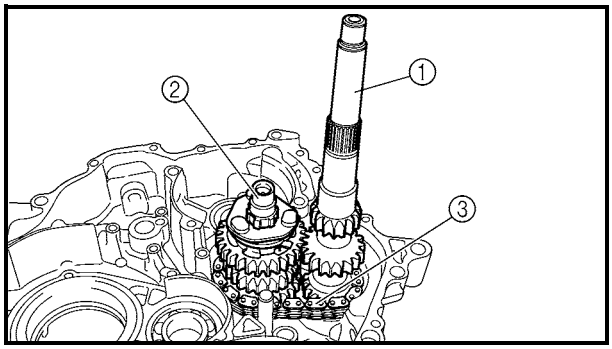

2.Remove:
- Secondary shaft ①
- Drive axle assembly ②
- Chain ③

NOTE:
Remove the secondary shaft, drive axle assembly, and chain as a set.

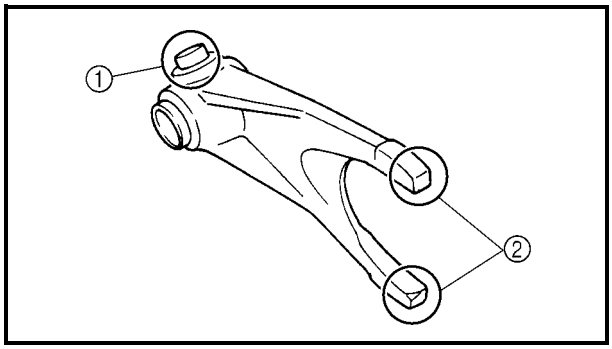

CHECKING THE SHIFT FORK

1.Check:
- Shift fork cam follower ①
- Shift fork pawl ②
  Scoring/bends/wear/damage → Replace.

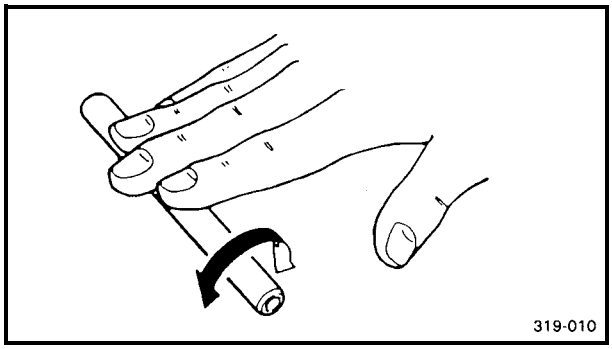

2.Check:
- Guide bar
  Roll the guide bar on a flat surface.
  Bends → Replace.

⚠ WARNING
Do not attempt to straighten a bent guide bar.

Downloaded from www.Manualslib.com manuals search engine

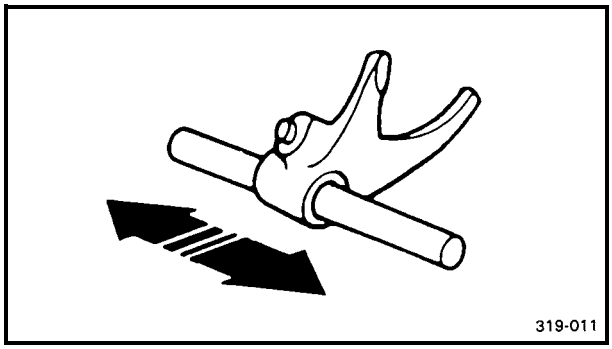

3.Check:
- Shift fork movement
  (on the guide bar)
  Unsmooth operation → Replace the shift fork and the guide bar.

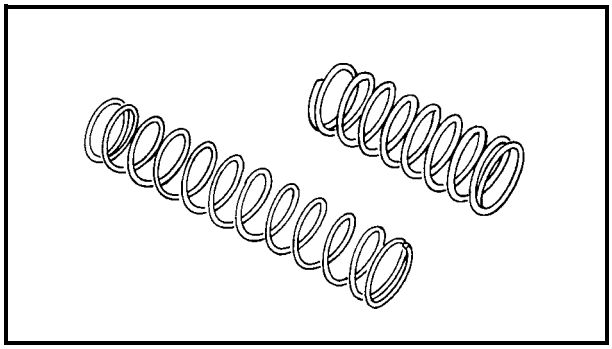

4.Check:
- Spring
  Cracks/damage → Replace.

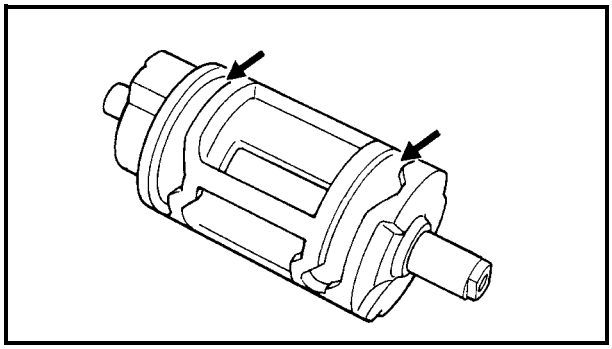

CHECKING THE SHIFT CAM

1.Check:
- Shift cam grooves
  Scratches/wear/damage → Replace.

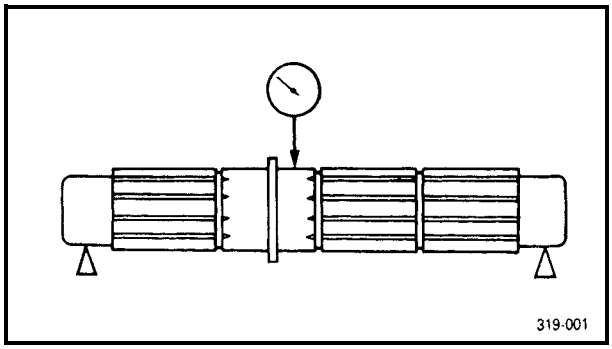

CHECKING THE DRIVE AXLE

1.Measure:
- Axle runout
  Use a centering device and a dial gauge.
  Out of specification → Replace the bent axle.

Runout limit (drive axle):
0.03 mm (0.001 in)

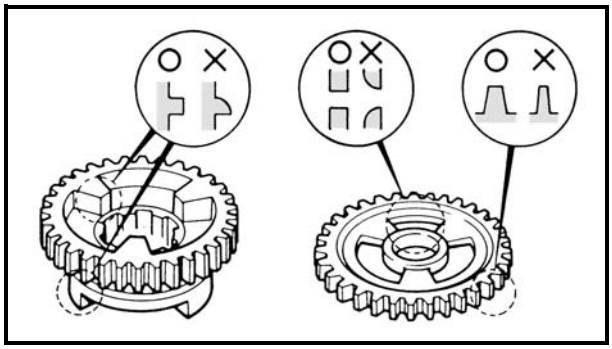

CHECKING THE HIGH WHEEL GEAR AND MIDDLE DRIVE GEAR

1.Check:
- Gear teeth
  Blue discoloration/pitting/wear → Replace.
- Mated dogs
  Rounded edges/cracks/missing portions → Replace.

Downloaded from www.Manualslib.com manuals search engine

2.Check:
- Gear movement
  Unsmooth → Repeat steps #1 or replace the defective parts.

3.Check:
- Circlip
  Bends/looseness/damage → Replace.

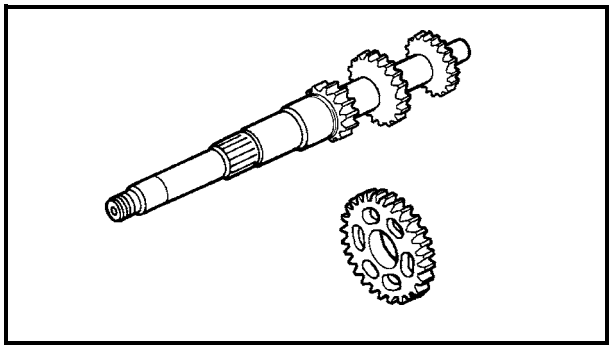

CHECKING THE SECONDARY SHAFT AND DRIVEN SPROCKET

1.Check
- Gear teeth
  Blue discoloration/pitting/wear → Replace.

2.Check:
- Gear movement
  Unsmooth → Repeat steps #1 or replace the defective parts.

3.Check:
- Circlip
- Bends/looseness/damage → Replace.

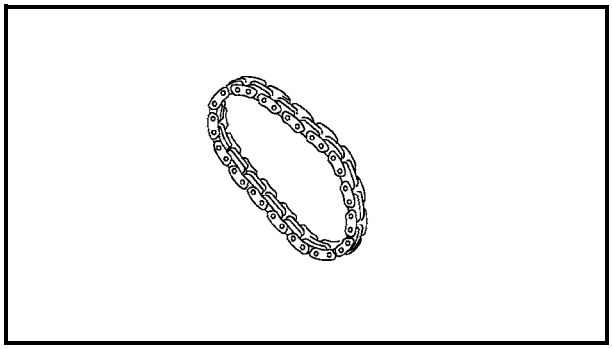

CHECKING THE CHAIN

1.Check
- Chain
  Cracks/shift → Replace the chain, secondary shaft and driven sprocket as a set.

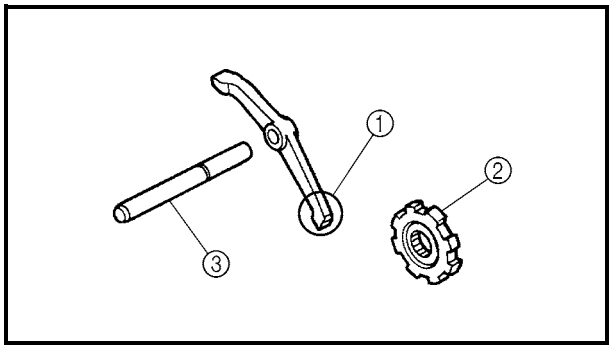

CHECKING THE STOPPER LEVER AND STOPPER WHEEL

1.Check
- Stopper lever pawl ①
  Bends/damage/wear → Replace the stopper lever and stopper wheel as a set.
- Stopper wheel ②
  Damage/wear → Replace the stopper wheel and stopper lever as a set.
- Shaft ③
  Bends/damage/wear → Replace.

Downloaded from www.Manualslib.com manuals search engine

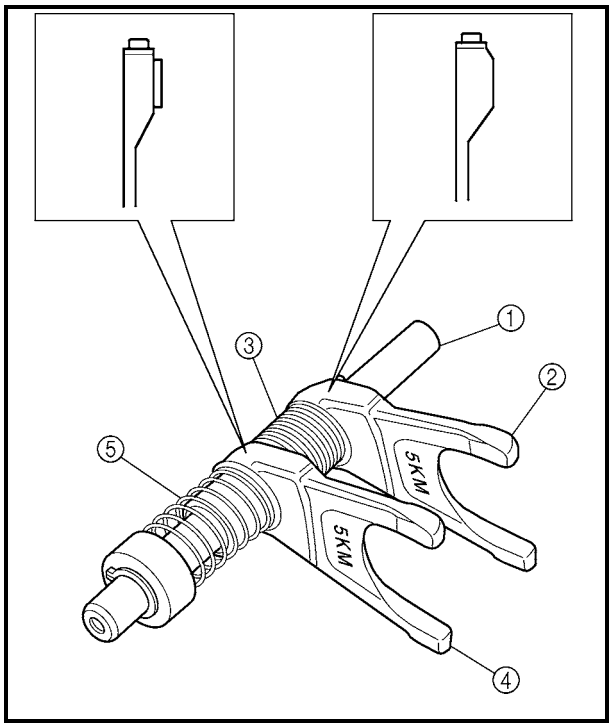

ASSEMBLING THE SHIFT FORK ASSEMBLY

1.Install:
- Guide bar ①
- Shift fork 2 ②
- Long spring ③
- Shift fork 1 ④
- Short spring ⑤

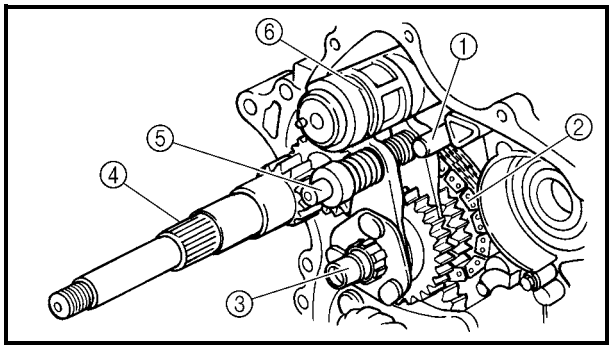

INSTALLING THE TRANSMISSION

1.Install:
- Stopper lever
- Shaft ①
- Chain ②
- Drive axle assembly ③
- Secondary shaft ④
- Shift fork assembly ⑤
- Shift cam ⑥
- Low wheel gear

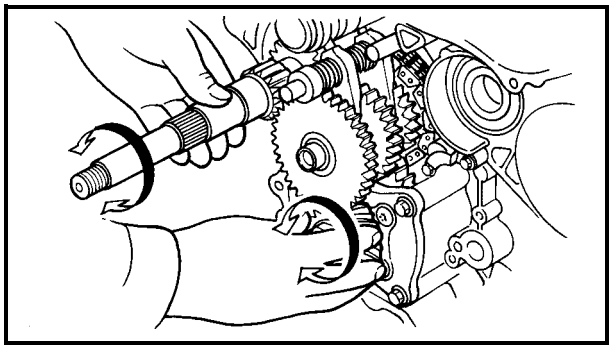

2.Check:
- Shift operation
  Unsmooth operation → Repair.

NOTE:
- Oil each gear and bearing thoroughly.
- Before assembling the crankcase, be sure that the transmission is in neutral and that the gears turn freely.

Downloaded from www.Manualslib.com manuals search engine

MIDDLE GEAR

MIDDLE DRIVE SHAFT

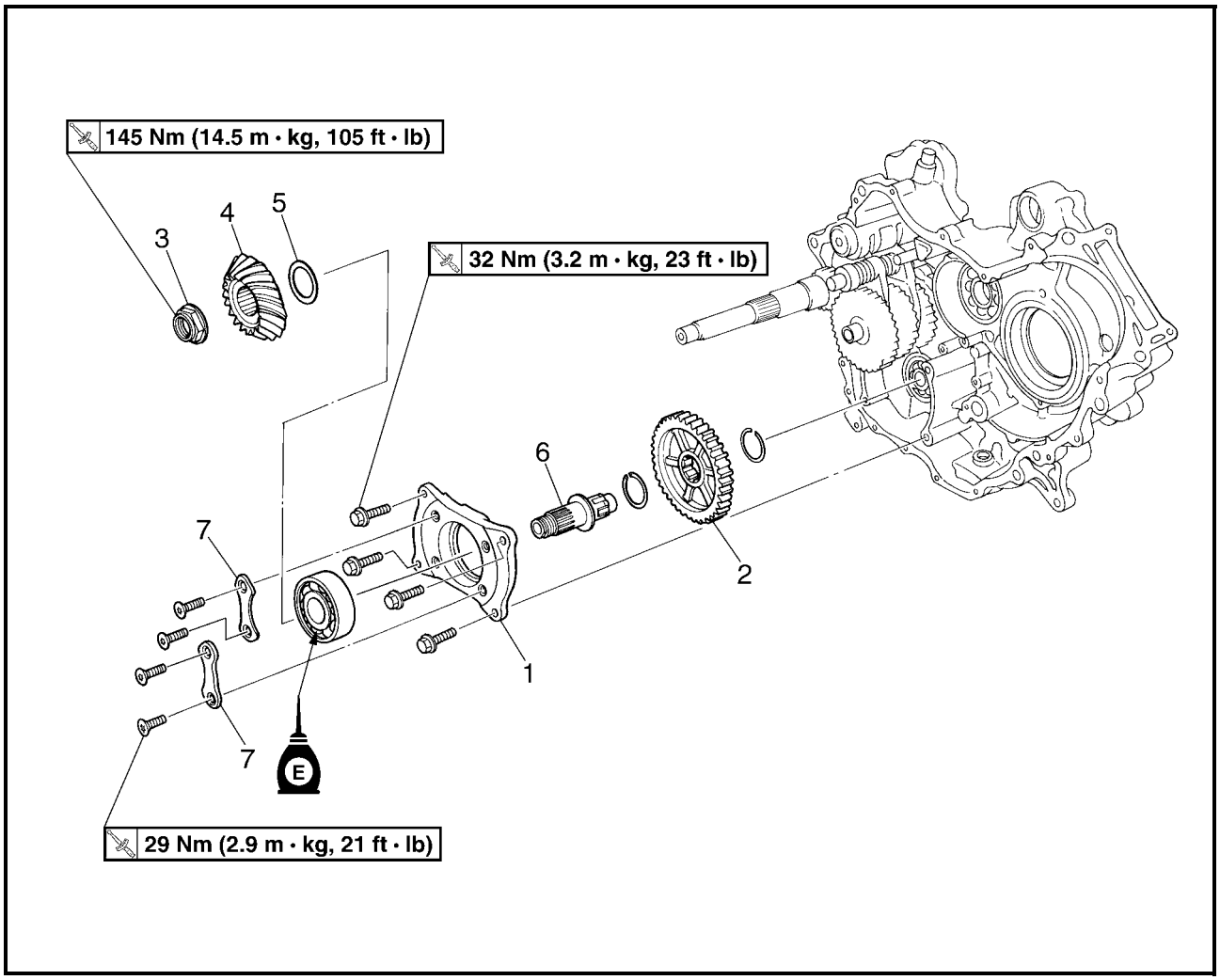

Order	Job name/Part name	Q'ty	Remarks
	Removing the middle drive shaft		Remove the parts in the order below.
	Crankcase separation		Refer to "CRANKCASE".
1	Bearing housing	1	
2	Middle driven gear	1	
3	Nut	1	Refer to "REMOVING/INSTALLING THE MIDDLE DRIVE SHAFT".
4	Middle drive pinion gear	1	
5	Shim		Refer to "MIDDLE DRIVE AND DRIVEN GEAR SHIM SELECTION".
6	Middle drive shaft	1	
7	Bearing retainer	2	
			For installation, reverse the removal procedure.

Downloaded from www.Manualslib.com manuals search engine

MIDDLE DRIVEN SHAFT

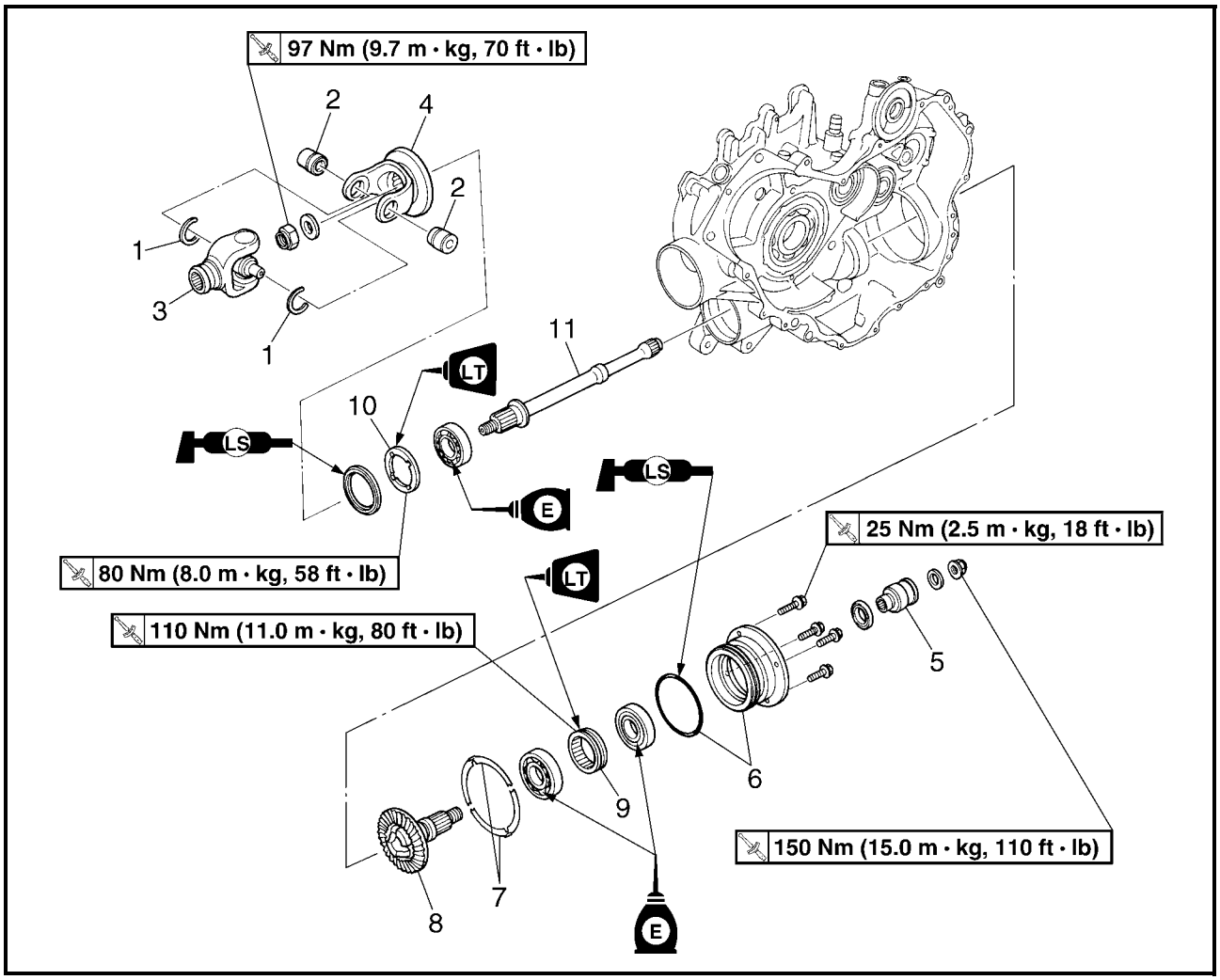

Order	Job name/Part name	Q'ty	Remarks
	Disassembling the middle driven shaft		Remove the parts in the order below.
	Crankcase separation		Refer to "CRANKCASE".
1	Circlip	2	Refer to "INSTALLING/REMOVING THE MIDDLE DRIVEN SHAFT".
2	Bearing	2	
3	Universal joint	1	
4	Universal joint yoke	1	
5	Coupling gear	1	
6	Bearing housing/O-ring	1/1	
7	Shim		Refer to "MIDDLE DRIVE AND DRIVEN GEAR SHIM SELECTION".
8	Middle driven pinion gear	1	Refer to "REMOVING/INSTALLING THE MIDDLE DRIVEN SHAFT".
9	Bearing retainer	1	

Downloaded from www.Manualslib.com manuals search engine

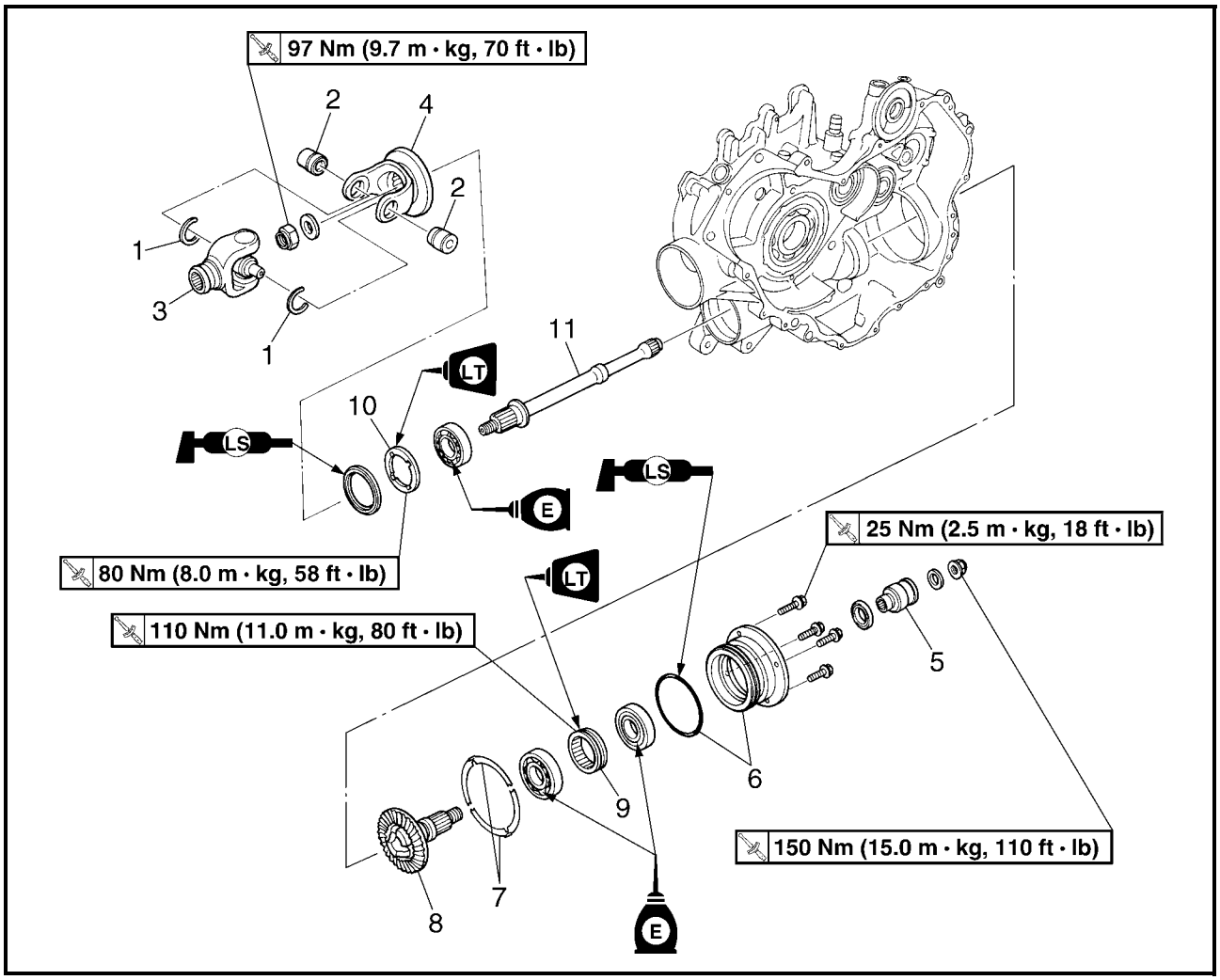

Order	Job name/Part name	Q'ty	Remarks
10	Bearing retainer	1	
11	Middle driven shaft	1	
			For installation, reverse the removal procedure.

Downloaded from www.Manualslib.com manuals search engine

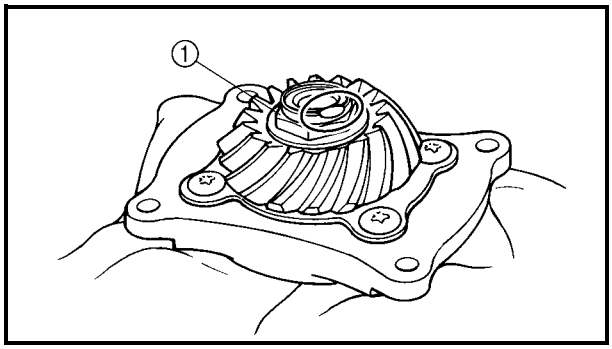

REMOVING THE MIDDLE DRIVE SHAFT

1.Straighten:
- Punched portion of the nut (middle drive pinion gear)

2.Loosen:
- Nut (middle drive pinion gear) ①

NOTE:
Secure the middle drive shaft in the vise with a clean rag.

3.Remove:
- Nut (middle drive pinion gear)
- Middle drive pinion gear
- Shim(s)

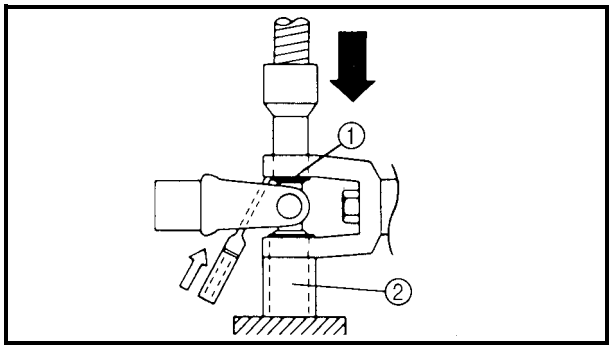

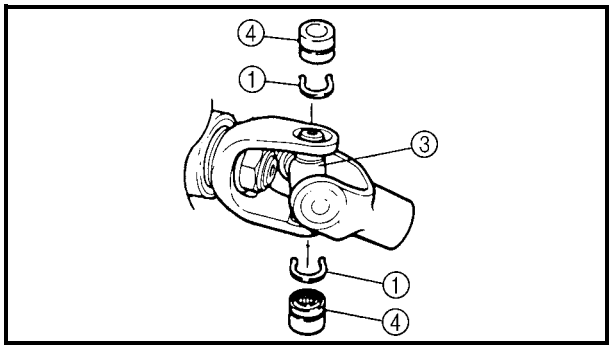

REMOVING THE MIDDLE DRIVEN SHAFT

1.Remove:
- Universal joint

****

Removal steps:
- Remove the circlips ①.
- Place the U-joint in a press.
- With a suitable diameter pipe ② beneath the yoke ③, press the bearing ④ into the pipe as shown.

NOTE:
It may be necessary to lightly tap the yoke with a punch.

- Repeat the steps for the opposite bearing.
- Remove the yoke.

NOTE:
It may be necessary to lightly tap the yoke with a punch.

****

Downloaded from www.Manualslib.com manuals search engine

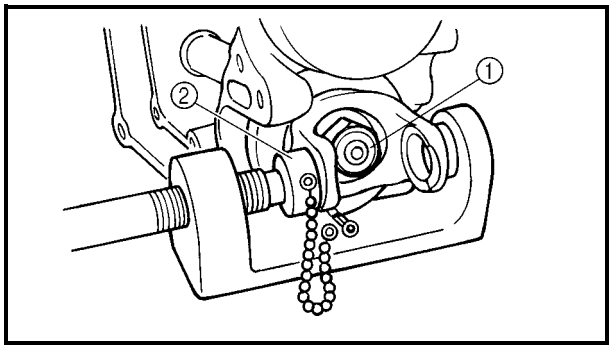

2.Remove:
- Nut ①
- Washer
- Universal joint yoke

NOTE:
Use the universal joint holder ② to hold the universal joint yoke.

	Universal joint holder: P/N. YM-04062

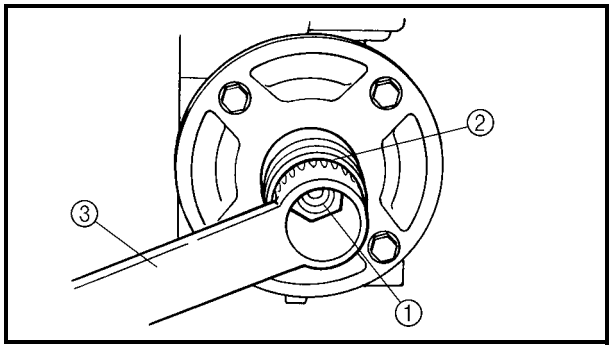

3.Remove:
- Nut ①
- Washer
- Coupling gear ②

NOTE:
Use the coupling gear/middle shaft tool ③ to hold the coupling gear.

	Coupling gear/middle shaft tool P/N. YM-01230,90890-0229

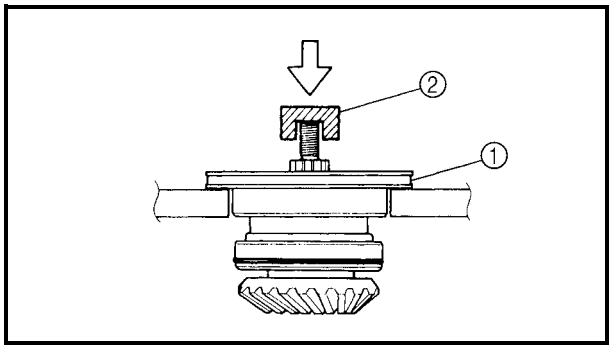

4.Remove:
- Bearing housing assembly ①

****

Removal steps:
- Clean the outside of the middle driven shaft.
- Place the middle driven shaft onto a hydraulic press.

CAUTION:
- **Never directly press the shaft end with a hydraulic press, this will result in damage to the shaft thread.**
- **Install the suitable socket ② on the shaft end to protect the thread from damage.**

- Press the shaft end and remove the bearing housing.

****

Downloaded from www.Manualslib.com manuals search engine

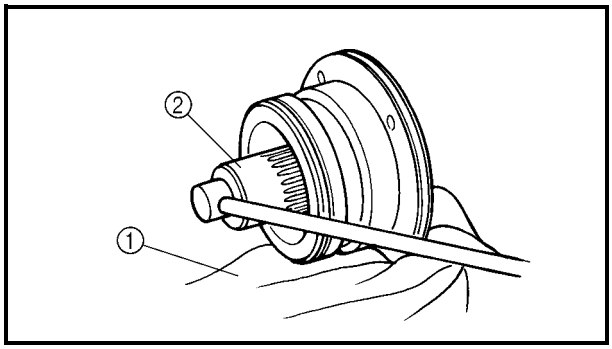

5.Remove:
- Bearing retainer
- Bearing

****

Removal steps:
- Attach the folded rag ①.
- Secure the bearing housing edge in the vise.
- Attach the bearing retainer wrench ②.

	Bearing retainer wrench: **P/N. YM-04128, 90890-04128**

CAUTION:

The middle driven shaft bearing retainer has left-handed threads. To loosen the retainer turn it clockwise.

- Remove the bearing retainer and bearing.

****

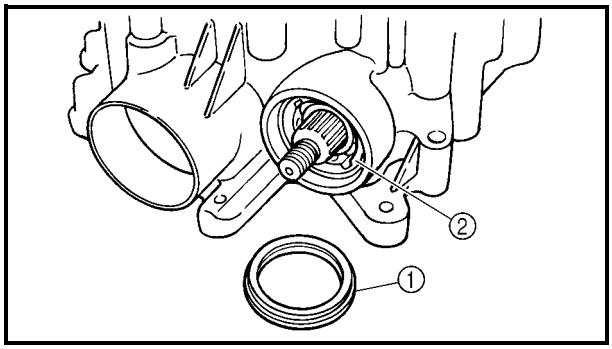

6.Remove:
- Front drive shaft coupling
- Oil seal ①
- Bearing retainer ②
- Bearing

NOTE:
Attach the ring nut wrench ③.

	Ring nut wrench: **P/N. YM-38404, 90890-01430**

CAUTION:

The middle driven shaft bearing retainer has left-handed threads. To loosen the retainer turn it clockwise.

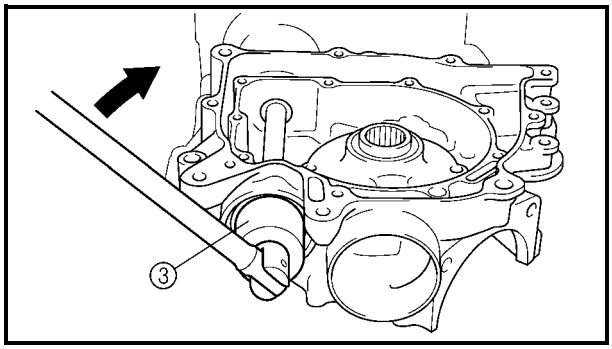

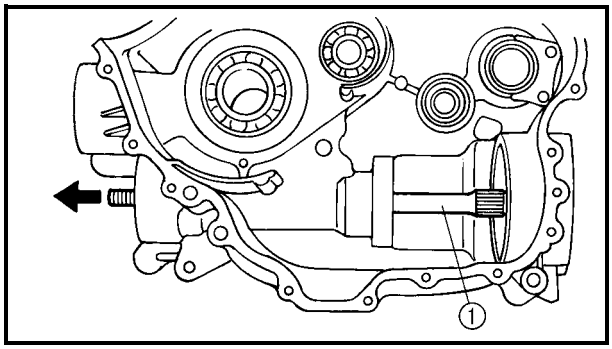

7.Remove:
- Middle drive shaft ①
  (with bearing)

Downloaded from www.Manualslib.com manuals search engine

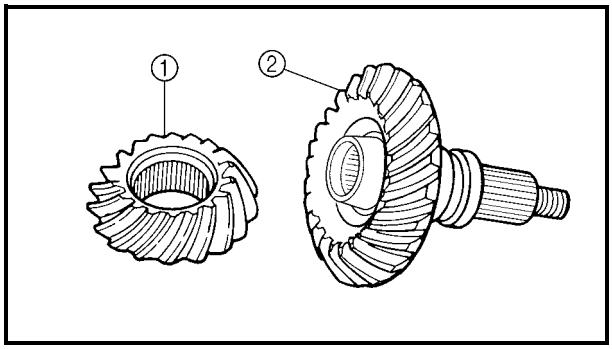

CHECKING THE PINION GEAR

1.Check
- Gear teeth (drive pinion gear) ①
- Gear teeth (driven pinion gear) ②
  Pitting/galling/wear → Replace.

2.Check
- O-ring
  Damage → Replace.
- Bearings
  Pitting/damage → Replace.

3.Check:
- U-joint movement
  Roughness → Replace U-joint.

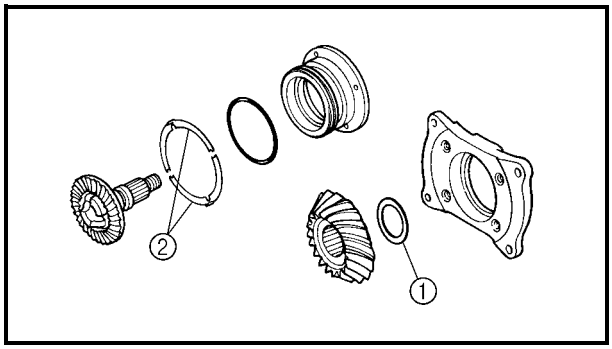

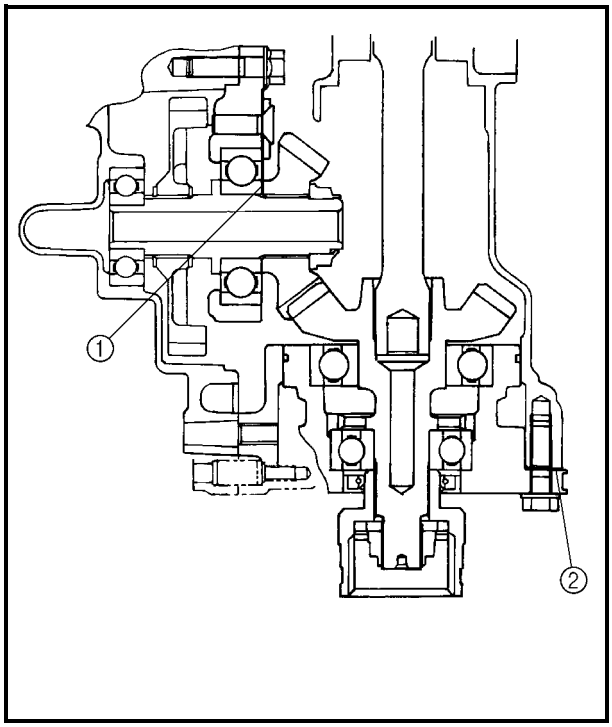

MIDDLE DRIVE AND DRIVEN GEAR SHIM SELECTION

When the drive and driven gear, bearing housing assembly and/or crankcase replaced, be sure to adjust the gear shim ① and ②.

1.Select:
- Middle drive gear shim ①
- Middle driven gear shim ②

****

Selection steps:
- Position middle drive and driven gear by using shims ① and ② with their respective thickness calculated from information marked on crankcase, bearing housing and drive gear end.

① Shim thickness “A”
② Shim thickness “B”

- To find shim thickness “A” use following formula:

Middle drive pinion gear shim thickness:
“A” = ⓐ + ⓓ – ⓑ – ⓒ

Downloaded from www.Manualslib.com manuals search engine

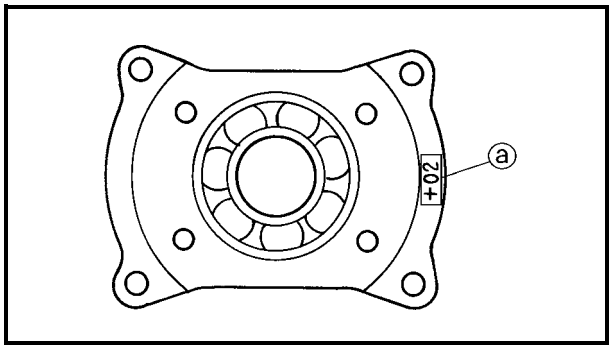

Where:

ⓐ = a numeral (usually a decimal number) on the bearing housing is either added to or subtracted from “7.5”.

ⓑ = 17.0

ⓒ = 55.0

ⓓ = a numeral (usually a decimal number) on the right crankcase specifies a thickness of “64.98”.

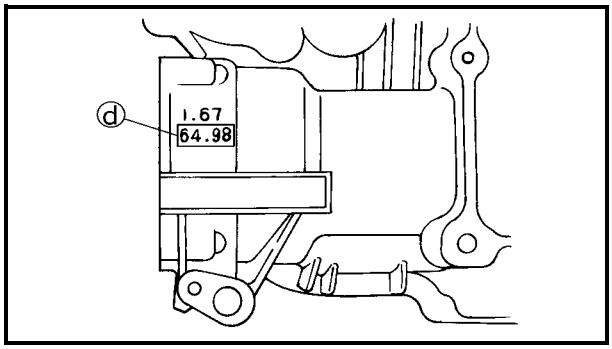

Example:

1) If the bearing housing is marked “+02”,
   ..... ⓐ is 7.52,
2) ⓑ is 17
3) ⓒ is 55
4) If the crankcase (right) is marked “64.98”,
   ..... ⓓ is 64.98.
5) Therefore, the shim thickness is 0.50 mm.

A = 7.52 + 64.98 – 17 – 55
  = 0.50

6) Round off hundredths digit and select appropriate shim(s).
   In the example above, the calculated shim thickness is 0.50 mm. The chart instructs you, however, to round off 0 to 0.

Hundredths	Round value
0, 1, 2	0
3, 4, 5, 6, 7	5
8, 9	10

Shims are supplied in the following thickness.

Middle drive pinion gear shim		
Thickness (mm)	0.10 0.15 0.20	0.30 0.40 0.50

Downloaded from www.Manualslib.com manuals search engine

● To find shim thickness “B” use the following formula:

Middle driven pinion gear shim thickness:
“B” = ⓔ – ⓕ + ⓖ – ⓗ + ⓘ – 0.05

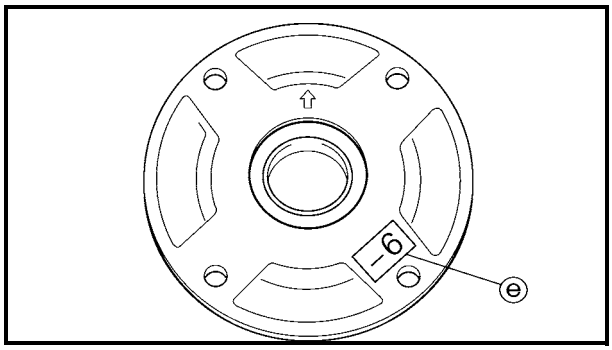

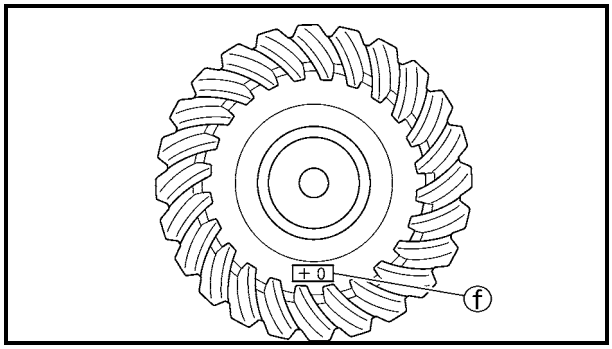

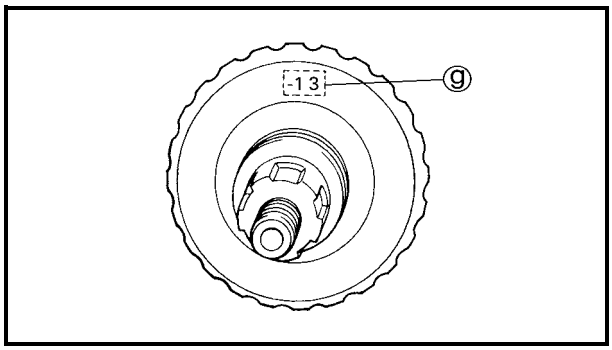

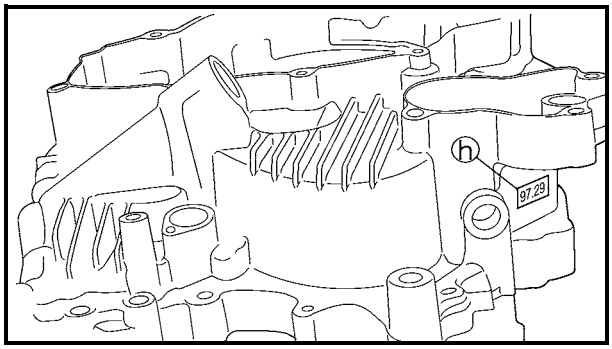

Where:

ⓔ = a numeral (usually a decimal number) on the bearing housing is either added to or subtracted from “76”.

ⓕ = a numeral (usually a decimal number) on the middle driven pinion gear is either added to or subtracted from “60”.

ⓖ = a numeral (usually a decimal number) on the middle driven pinion gear is either added to or subtracted from “80.5”.

ⓗ = a numeral (usually a decimal number) on the left crankcase specifies a thickness of “97.29”.

ⓘ = a numeral (usually a decimal number) on the right crankcase specifies a thickness of “1.67”.

Example:

1) If the bearing housing is marked “–06”, ... ⓔ is 75.94.
2) If the driven pinion gear is marked “+0”, ... ⓕ is 60.00.
3) If the driven pinion gear is marked “–13”, ... ⓖ is 80.37.
4) If the crankcase (left) is marked “97.29”, ... ⓗ is 97.29.
5) If the crankcase (right) is marked “1.67”, ... ⓘ is 1.67.
6) Therefore, the shim thickness is 0.64 mm.

B = 75.94 – 60.00 + 80.37 – 97.29 + 1.67 – 0.05 = 0.64

Downloaded from www.Manualslib.com manuals search engine

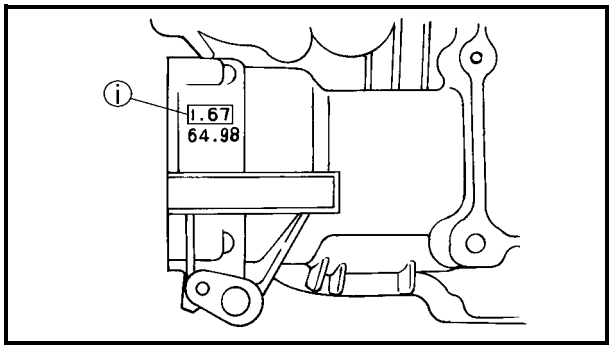

6) Round off hundredths digit and select appropriate shim(s).
In the example above, the calculated shim thickness is 0.64 mm. The chart instructs you, however, to round off 4 to 5.

Hundredths	Round value
0, 1, 2	0
3, 4, 5, 6, 7	5
8, 9	10

Shims are supplied in the following thickness.

Middle drive pinion gear shim		
Thickness (mm)	0.10 0.15 0.20 0.30	0.40 0.50 0.60

****

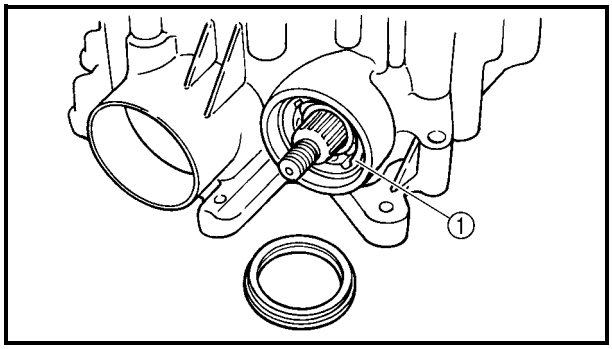

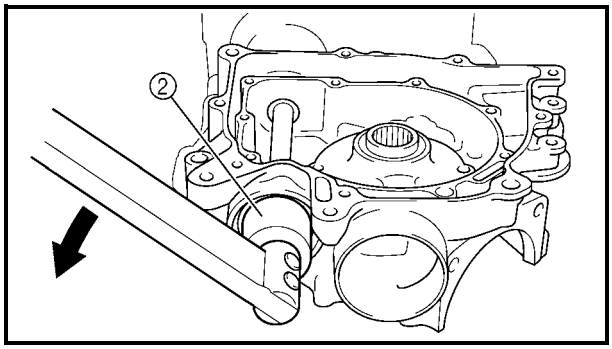

INSTALLING THE MIDDLE DRIVEN SHAFT

1.Install:

- Bearing retainer ① LT

80 Nm (8.0 m • kg, 58 ft • lb)

NOTE:

Attach the ring nut wrench ②.

Ring nut wrench: P/N. YM-38404, 90890-01430

CAUTION:

The middle driven shaft bearing retainer has left-handed threads. To tighten the retainer turn it counterclockwise.

Downloaded from www.Manualslib.com manuals search engine

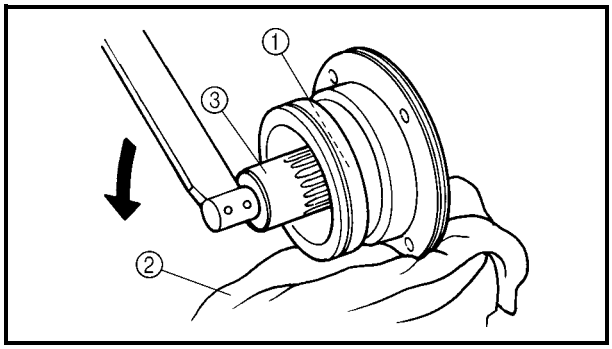

2.Install:
- Bearing retainer ① LT

****

Installation steps:
- Attach the folded rag ②.
- Secure the bearing housing edge in the vise.
- Attach the bearing retainer wrench ③.

	Bearing retainer wrench: **P/N. YM-04128, 90890-04128**

- Tighten the bearing retainer.

CAUTION:

The middle driven shaft bearing retainer has left-handed threads. To tighten the retainer turn it counterclockwise.

	Bearing retainer: **110 Nm (11.0 m • kg, 80 ft • lb)**

****

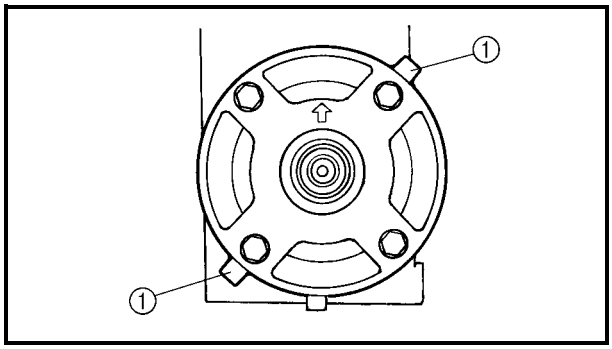

3.Install:
- Shims ①
- Bearing housing

NOTE:
Install the shims so that the tabs are positioned as shown in the illustration.

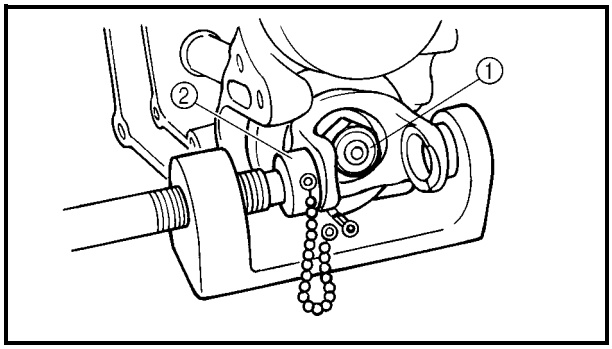

4.Install:
- Universal joint yoke (rear side)
- Washer
- Nut ① LT — **97 Nm (9.7 m • kg, 70 ft • lb)**

NOTE:
Use the universal joint holder ② to hold the yoke.

	Universal joint holder: **P/N. YM-04062, 90890-04062**

Downloaded from www.Manualslib.com manuals search engine

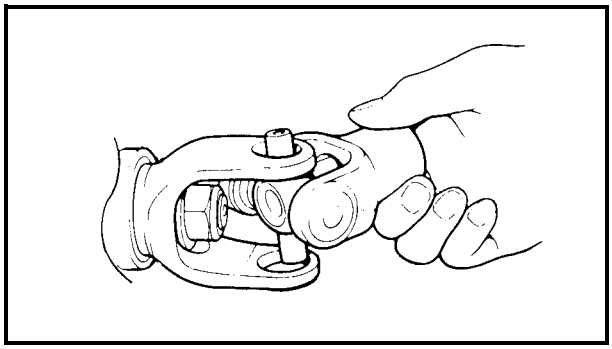

5.Install:
- Universal joint

****

Installation steps:
- Install the opposite yoke into the U-joint.
- Apply wheel bearing grease to the bearings.
- Install the bearing ① onto the yoke.

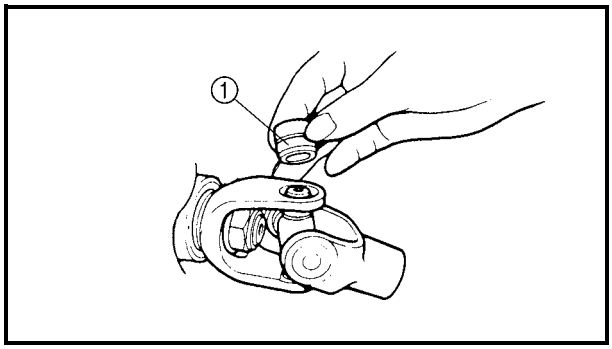

CAUTION:

Check each bearing. The needles can easily fall out of their races. Slide the yoke back and forth on the bearings; the yoke will not go all the way onto a bearing if a needle is out of place.

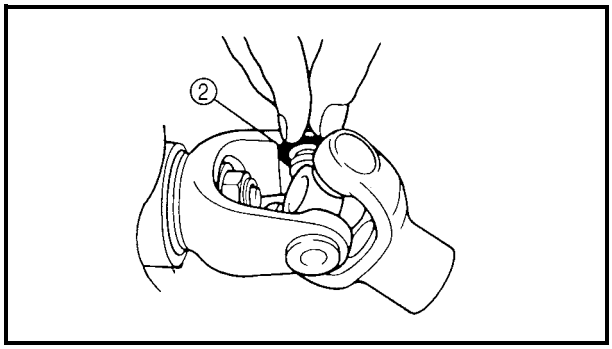

- Press each bearing into the U-joint using a suitable socket.

NOTE:
The bearing must be inserted far enough into the U-joint so that the circlip can be installed.

- Install the circlips ② into the groove of each bearing.

****

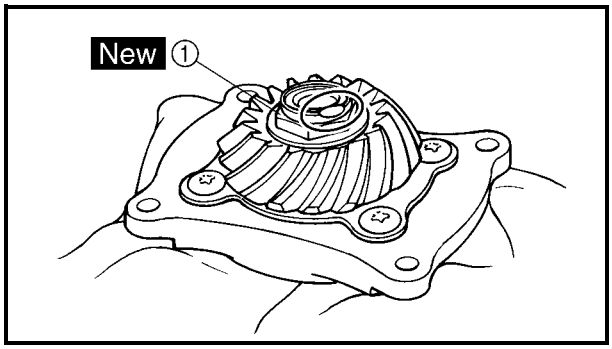

INSTALLING THE MIDDLE DRIVE SHAFT

1.Tighten:
- Nut (middle drive pinion gear) ① New

	145 Nm (14.5 m • kg, 105 ft • lb)

NOTE:
Secure the middle drive shaft in the vise with a clean rag.

2.Lock the threads with a drift punch.

Downloaded from www.Manualslib.com manuals search engine

MEASURING THE MIDDLE GEAR BACKLASH

1.Measure:
- Gear lash

Middle gear lash:
0.1 ~ 0.3 mm (0.004 ~ 0.012 in)

****

Measurement steps:
- Temporary install the right crankcase.
- Wrap a rag ② around a screwdriver ③, and then insert it into the installation hole ① of the left crankcase speed sensor to hold the middle driven gear.

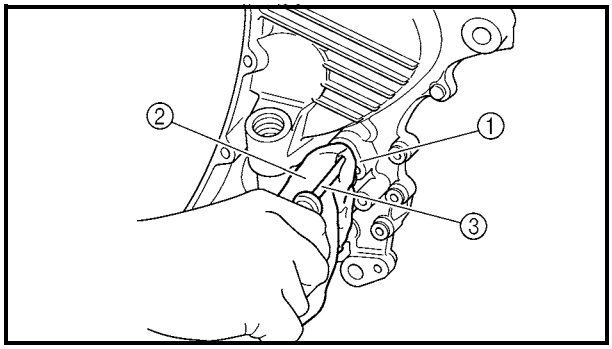

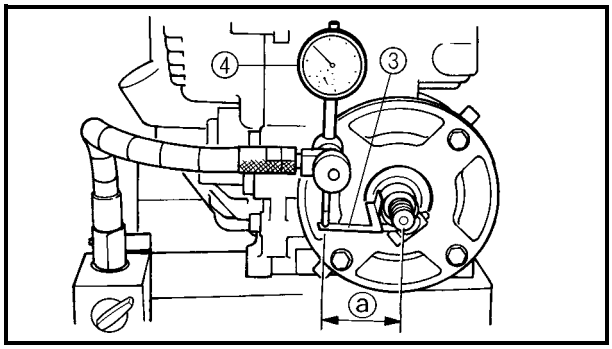

- Attach the gear lash measurement tool ③ and dial gauge ④.

Gear lash measurement tool:
P/N. YM-01467, 90890-01467

ⓐ 46 mm (1.8 in)
- Measure the gear lash while rotating the middle driven shaft back and forth.

NOTE:
Measure the gear lash at 4 positions. Rotate the middle driven gear 90° each time.

- If the gear lash is incorrect, adjust the gear lash by middle driven pinion gear shims and/or middle drive pinion gear shim(s).

****

Downloaded from www.Manualslib.com manuals search engine

COOLING SYSTEM

RADIATOR

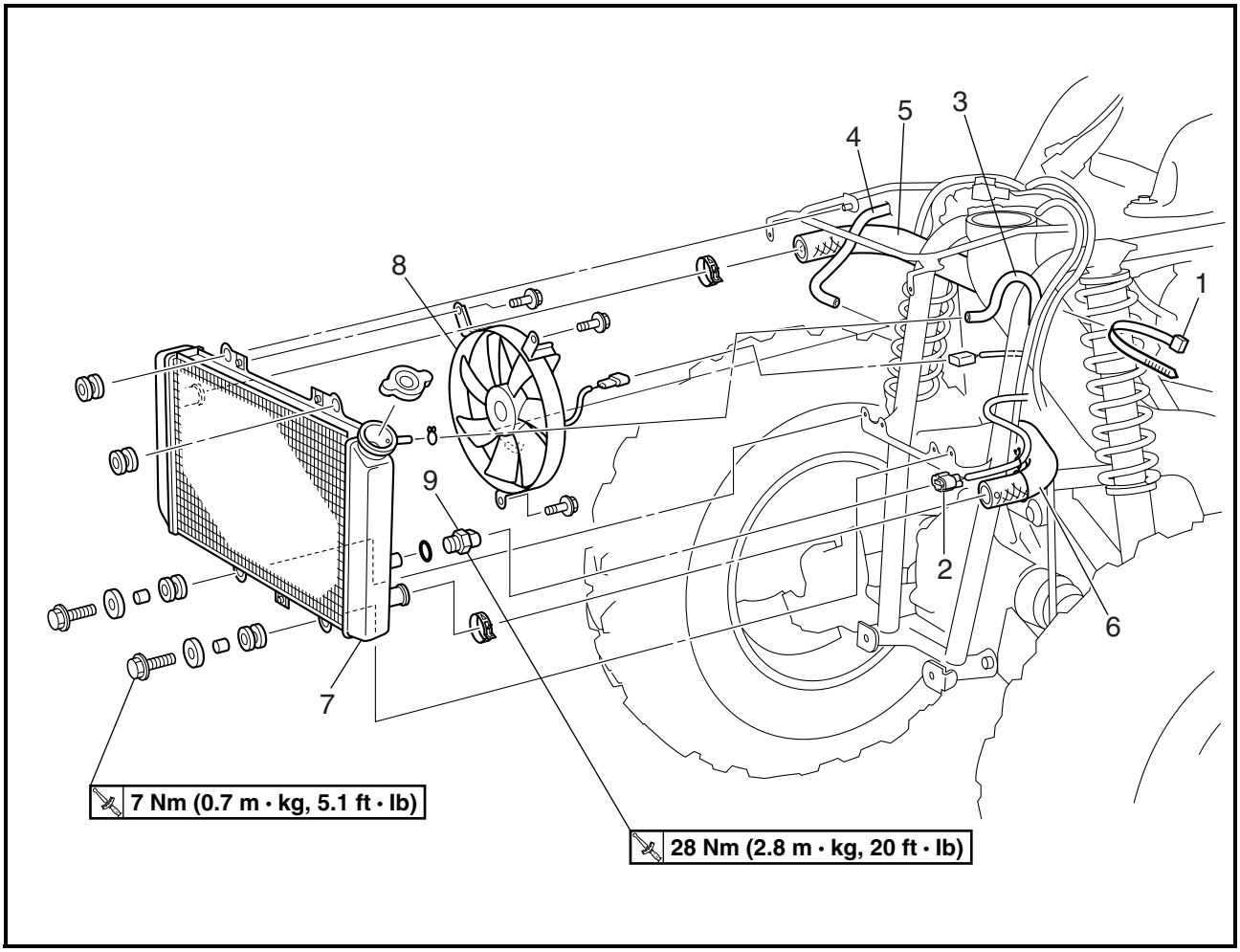

Order	Job name/Part name	Q'ty	Remarks
	Removing the radiator		Remove the parts in the order below.
	Seat and side panels		Refer to "SEAT AND SIDE PANELS" in CHAPTER 3.
	Front carrier, front bumper and front grill		Refer to "FRONT CARRIER, FRONT BUMPER AND FRONT GRILL" in CHAPTER 3.
	Handlebar cover, fuel tank cover and front fender		Refer to "HANDLEBAR COVER, FUEL TANK COVER AND FRONT FENDER" in CHAPTER 3.
	Left footrest board		Refer to "FOOTREST BOARDS" in CHAPTER 3.
	Coolant		Drain. Refer to "CHANGING THE COOLANT" in CHAPTER 3.
1	Plastic clamp	1	
2	Thermo switch coupler	1	Disconnect.
3	Coolant reservoir hose	1	Disconnect.
4	Radiator fan breather hose	1	

Downloaded from www.Manualslib.com manuals search engine

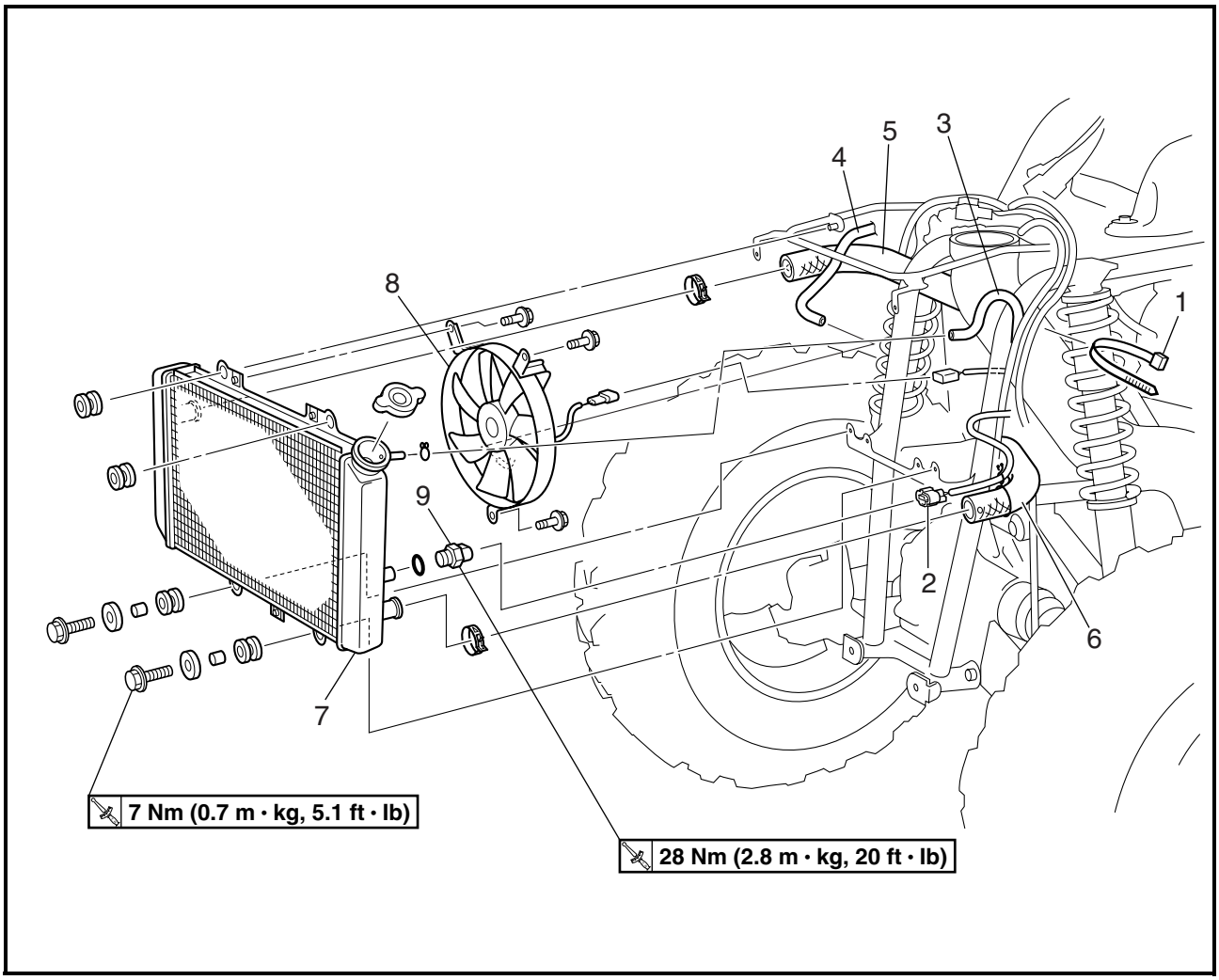

Order	Job name/Part name	Q'ty	Remarks
5	Radiator inlet hose	1	Disconnect.
6	Radiator outlet hose	1	Disconnect.
7	Radiator	1	
8	Radiator fan	1	
9	Thermo switch	1	
			For installation, reverse the removal procedure.

Downloaded from www.Manualslib.com manuals search engine

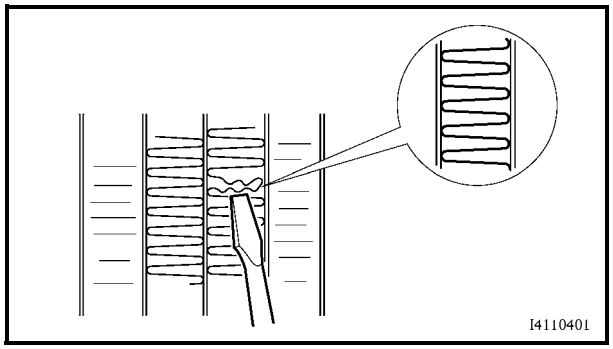

CHECKING THE RADIATOR

1.Check:
- Radiator fins
  Obstruction → Clean.
  Apply compressed air to the rear of the radiator.
  Damage → Repair or replace.

NOTE:
Straighten any flattened fins with a thin, flathead screwdriver.

2.Check:
- Radiator hoses
  Cracks/damage → Replace.

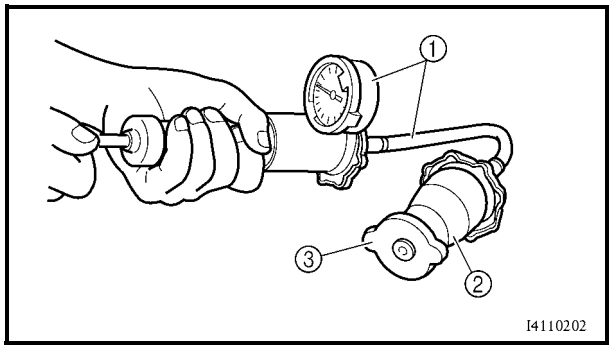

3.Measure:
- Radiator cap opening pressure
  Below the specified pressure → Replace the radiator cap.

Radiator cap opening pressure:
93.3 ~ 122.7 kPa
(0.933 ~ 1.227 kg/cm², 13.53 ~ 17.79 psi)

****

Measurement steps:
- Install the radiator cap tester ① and adapter ② onto the radiator cap ③.

Radiator cap tester:
P/N. YU-24460-01, 90890-01325
Adapter:
P/N. YU-33984, 90890-01352

- Apply the specified pressure for ten seconds and make sure that there is no drop in pressure.

****

4.Check:
- Radiator fan
  Damage → Replace.
  Malfunction → Check and repair.
  Refer to “COOLING SYSTEM” in CHAPTER 9.

Downloaded from www.Manualslib.com manuals search engine

INSTALLING THE RADIATOR

1.Fill:

- Cooling system
  (with the specified amount of the recommended coolant)
  Refer to “CHANGING THE COOLANT” in CHAPTER 3.

2.Check:

- Cooling system
  Leaks → Repair or replace any faulty part.

Downloaded from www.Manualslib.com manuals search engine

THERMOSTAT

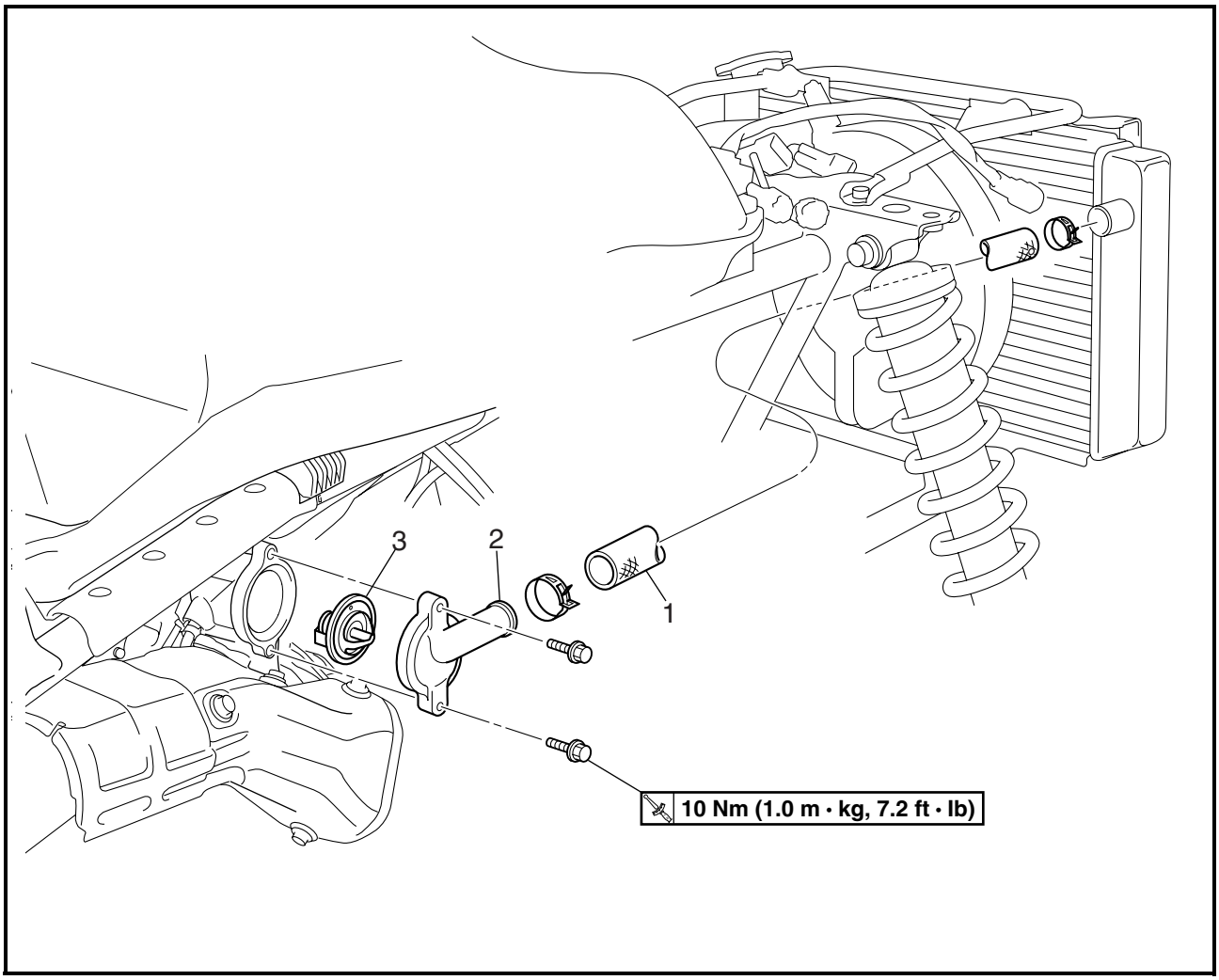

Order	Job name/Part name	Q'ty	Remarks
	Removing the thermostat		Remove the parts in the order below.
	Seat and fuel tank side panel (right)		Refer to "SEAT AND SIDE PANELS" in CHAPTER 3.
	Coolant		Drain. Refer to "CHANGING THE COOLANT" in CHAPTER 3.
1	Radiator inlet hose	1	
2	Thermostat cover	1	
3	Thermostat	1	
			For installation, reverse the removal procedure.

Downloaded from www.Manualslib.com manuals search engine

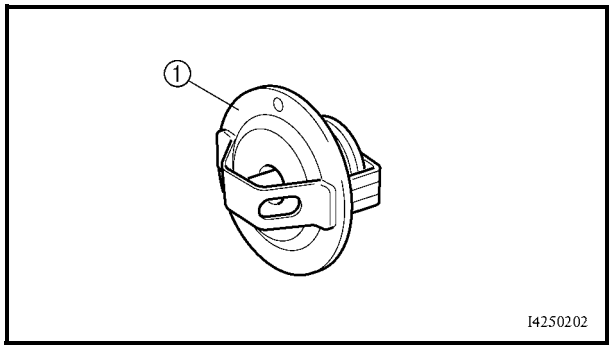

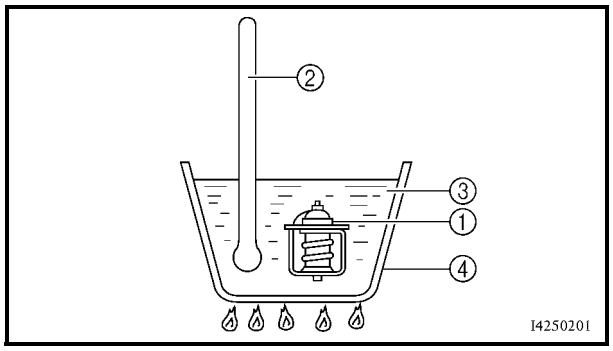

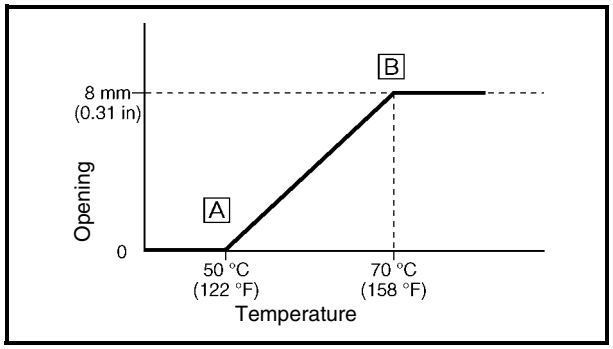

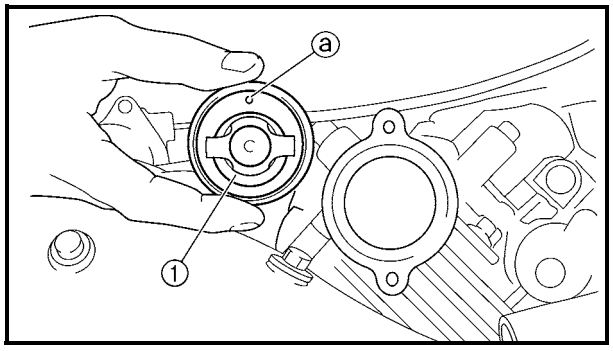

CHECKING THE THERMOSTAT

1.Check:
- Thermostat ①
  Does not open at 50 ~ 54 °C (122 ~ 158 °F)
  → Replace.

****

Checking steps:
- Suspend the thermostat in a container filled with water.
- Slowly heat the water.
- Place a thermometer in the water.
- While stirring the water, observe the thermostat and thermometer's indicated temperature.

****

① Thermostat
② Thermometer
③ Water
④ Container
Ⓐ Fully closed
Ⓑ Fully open

NOTE:
If the accuracy of the thermostat is in doubt, replace it. A faulty thermostat could cause serious overheating or overcooling.

2.Check:
- Thermostat housing cover
- Thermostat housing
  Cracks/damage → Replace.

INSTALLING THE THERMOSTAT

1.Install:
- Thermostat ①
- Thermostat housing cover

NOTE:
Install the thermostat with its breather hole ⓐ facing up.

2.Fill:
- Cooling system
  (with the specified amount of the recommended coolant)
  Refer to "CHANGING THE COOLANT" in CHAPTER 3.

3.Check:
- Cooling system
  Leak → Repair or replace any faulty part.

Downloaded from www.Manualslib.com manuals search engine

WATER PUMP

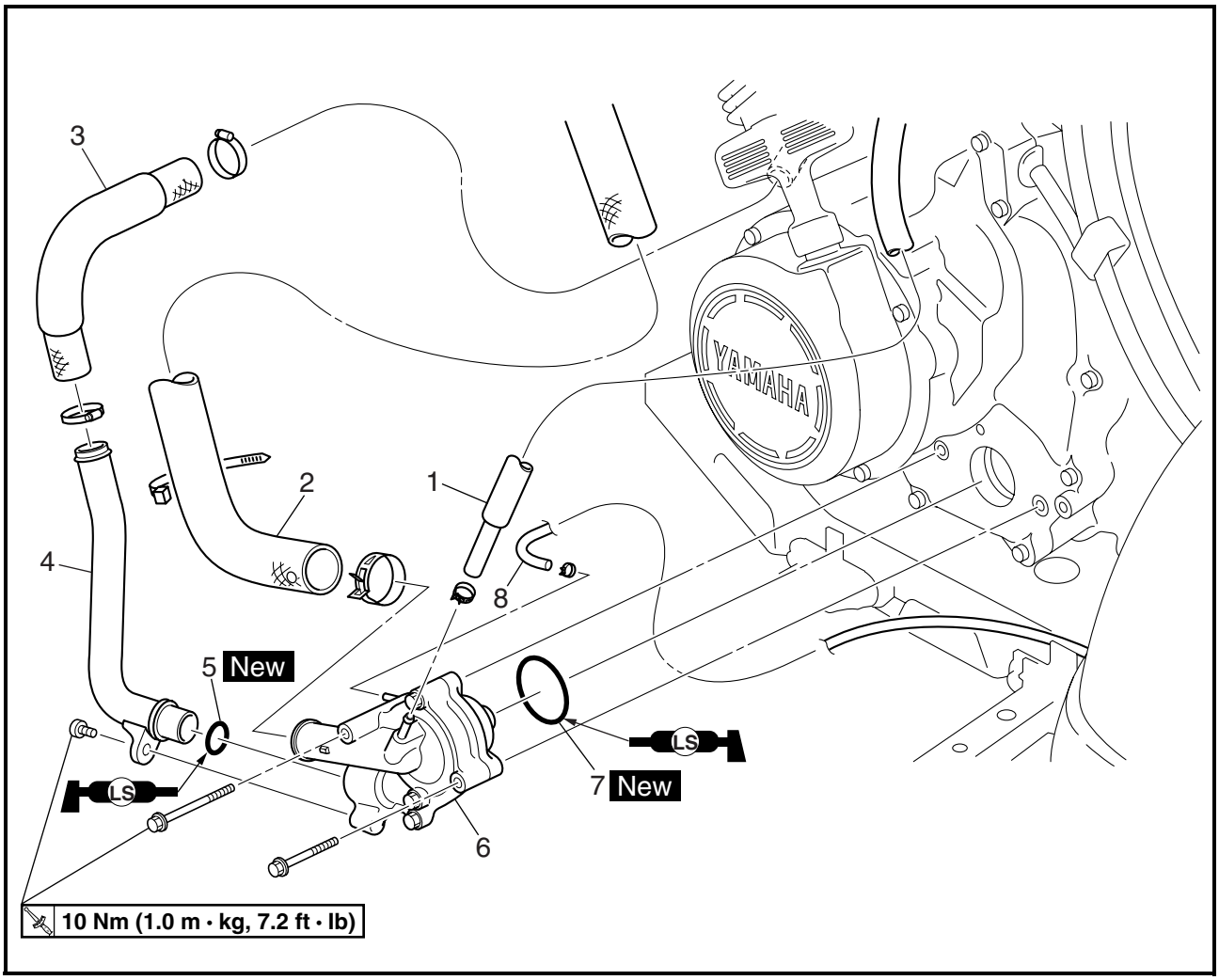

Order	Job name/Part name	Q'ty	Remarks
	Removing the water pump		Remove the parts in the order below.
	Seat, fuel tank side panel (left) and engine side cover		Refer to "SEAT AND SIDE PANELS" in CHAPTER 3.
	Left footrest board		Refer to "FOOTREST BOARDS" in CHAPTER 3.
	Coolant reservoir		Refer to "ENGINE REMOVAL" in CHAPTER 4.
1	Thermostat assembly bypass hose	1	
2	Radiator outlet hose	1	
3	Water pump outlet hose	1	
4	Water pump outlet pipe	1	
5	O-ring	1	
6	Water pump assembly	1	
7	O-ring	1	
8	Water pump breather hose	1	
			For installation, reverse the removal procedure.

Downloaded from www.Manualslib.com manuals search engine

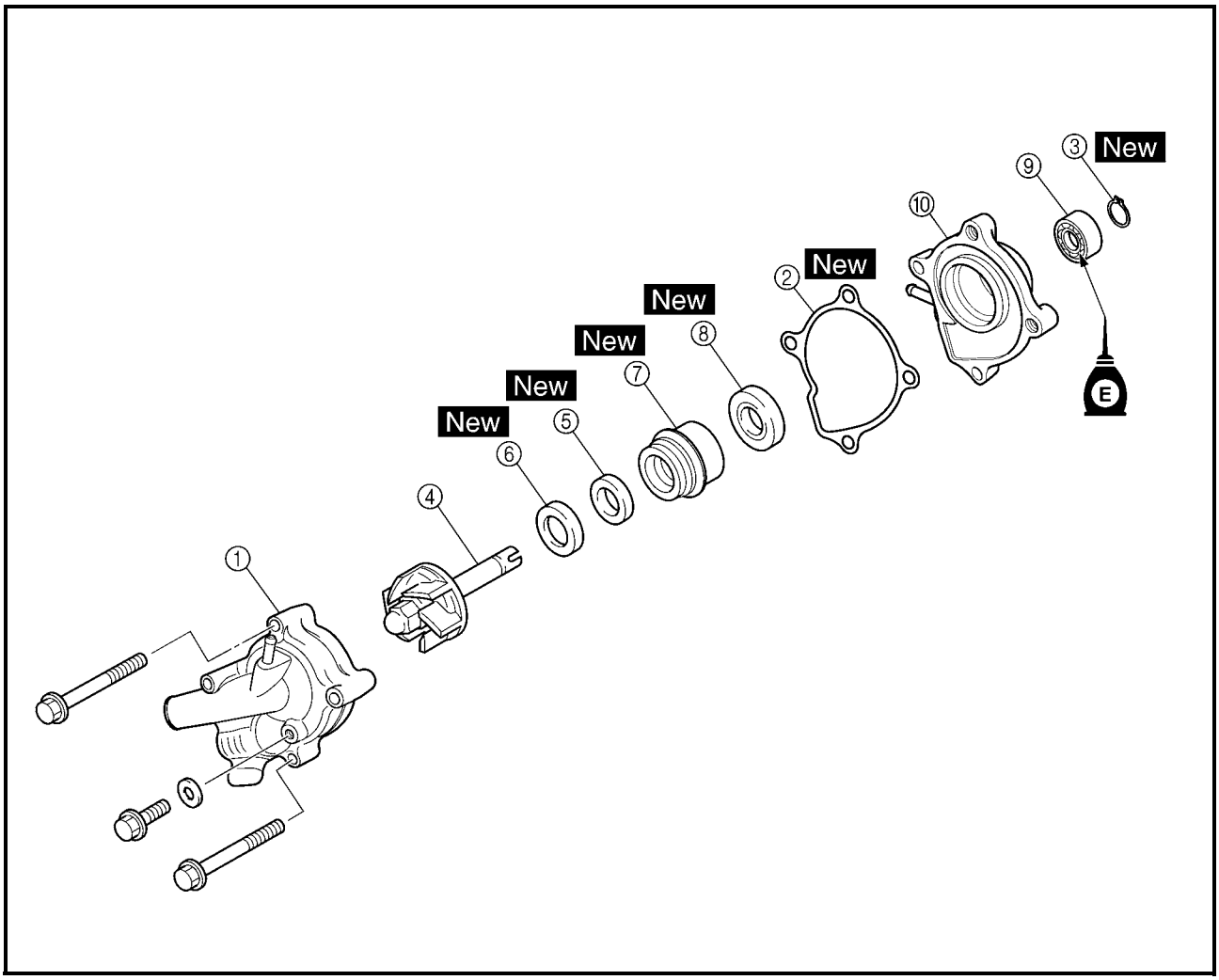

Order	Job name/Part name	Q'ty	Remarks
	Disassembling the water pump		Remove the parts in the order below.
①	Water pump housing cover	1	
②	Gasket	1	
③	Circlip	1	
④	Impeller	1	
⑤	Rubber damper holder	1	
⑥	Rubber damper	1	
⑦	Water pump seal	1	
⑧	Oil seal	1	
⑨	Bearing	1	
⑩	Water pump housing	1	
			For assembly, reverse the disassembly procedure.

Downloaded from www.Manualslib.com manuals search engine

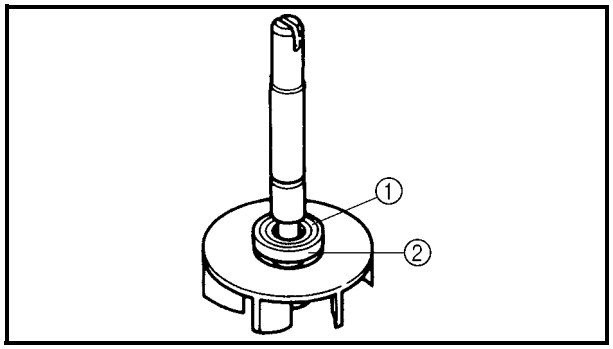

DISASSEMBLING THE WATER PUMP

1.Remove:
- Rubber damper holder ①
- Rubber damper ②
  (from the impeller, with a thin, flathead screwdriver)

NOTE:
Do not scratch the impeller shaft.

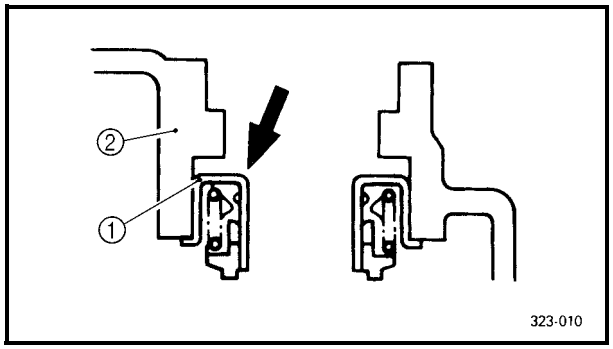

2.Remove:
- Water pump seal ①

NOTE:
Tap out the water pump seal from the inside of the water pump housing.

② Water pump housing

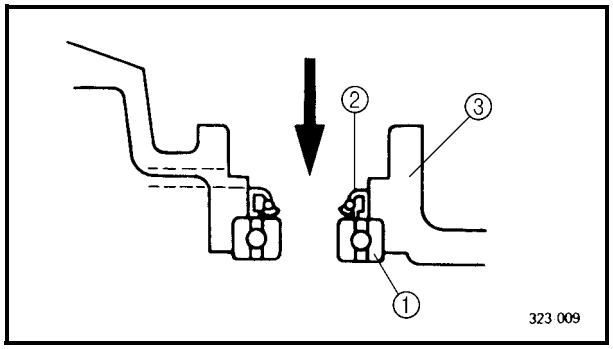

3.Remove:
- Bearing ①
- Oil seal ②

NOTE:
Tap out the bearing and oil seal from the outside of the water pump housing.

③ Water pump housing

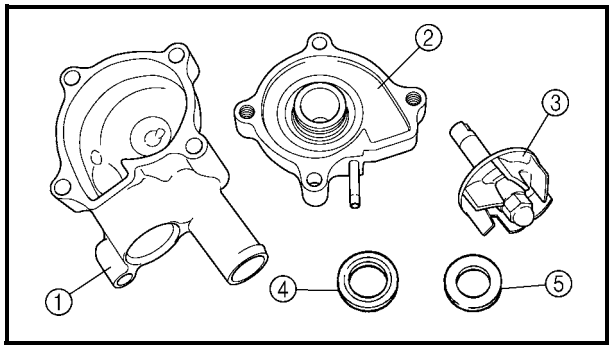

CHECKING THE WATER PUMP

1.Check:
- Water pump housing cover ①
- Water pump housing ②
- Impeller ③
- Rubber damper ④
- Rubber damper holder ⑤
  Cracks/damage/wear → Replace.

2.Check:
- Water pump seal
- Oil seal
- Water pump outlet pipe
  Cracks/damage/wear → Replace.
- Bearing
  Rough movement → Replace.

Downloaded from www.Manualslib.com manuals search engine

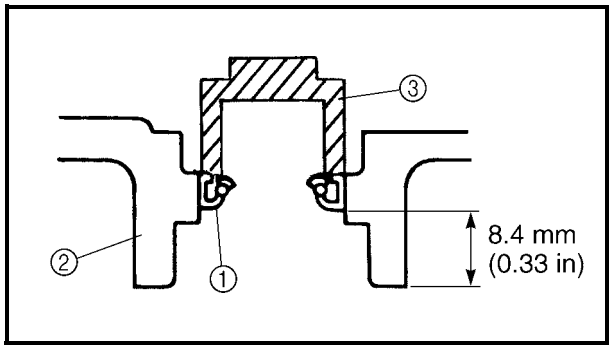

ASSEMBLING THE WATER PUMP

1.Install:
- Oil seal ① New
  (into the water pump housing ②)

NOTE:
- Before installing the oil seal, apply tap water or coolant onto its outer surface.
- Install the oil seal with a socket ③ that matches its outside diameter.

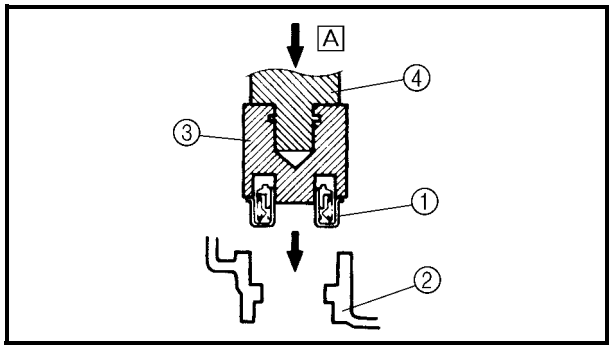

2.Install:
- Water pump seal ① New
  (into the water pump housing ②)

CAUTION:
Never lubricate the water pump seal surface with oil or grease.

NOTE:
Install the water pump seal with the special tools.

Mechanical seal installer ③:
P/N. YM-33221, 90890-04078
Middle driven shaft bearing driver ④:
P/N. YM-04058-1, 90890-04058

A Push down.

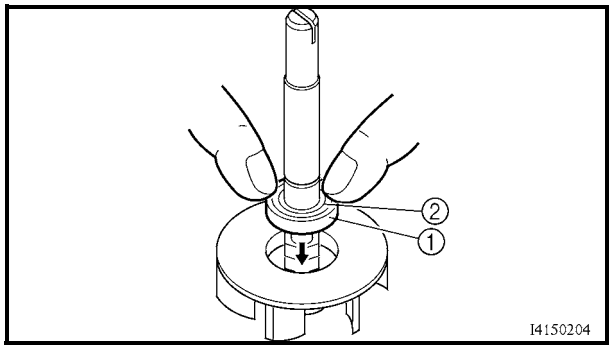

3.Install:
- Rubber damper ① New
- Rubber damper holder ② New

NOTE:
Before installing the rubber damper, apply tap water or coolant onto its outer surface.

Downloaded from www.Manualslib.com manuals search engine

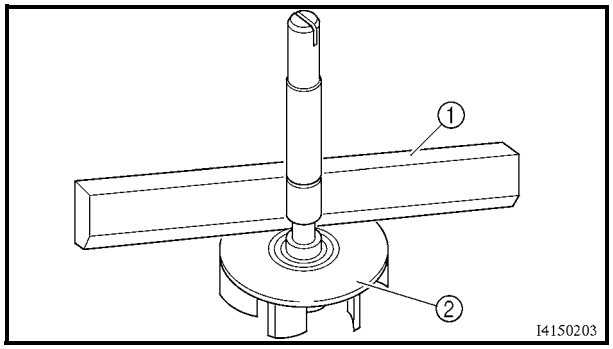

4.Measure:

- Impeller shaft tilt
  Out of specification → Repeat steps (3) and (4).

CAUTION:

Make sure that the rubber damper and rubber damper holder are flush with the impeller.

Max. impeller shaft tilt:
0.15 mm (0.006 in)

① Straightedge
② Impeller

Downloaded from www.Manualslib.com manuals search engine

CARBURETION

CARBURETOR

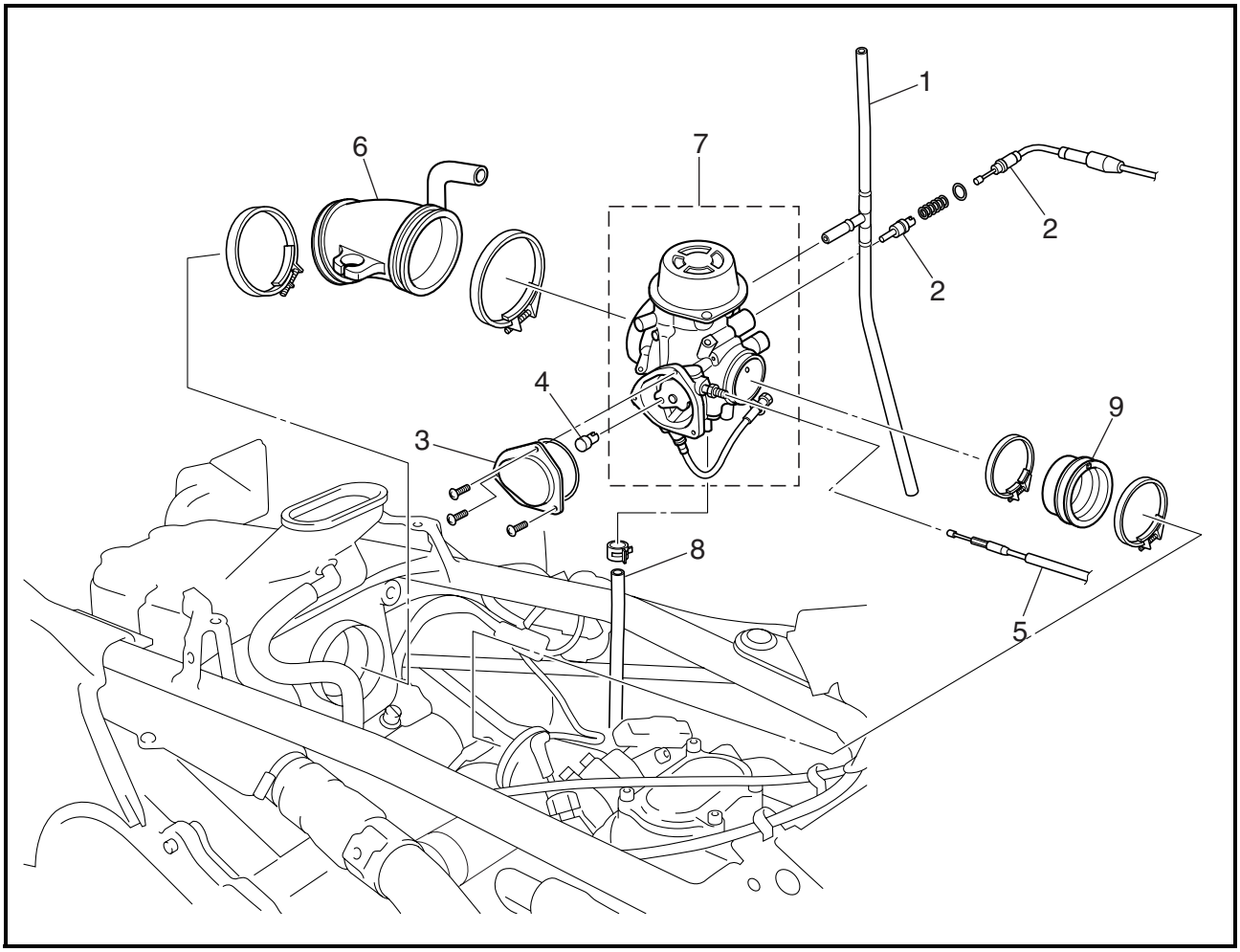

Order	Job name/Part name	Q'ty	Remarks
	Removing the carburetor		Remove the parts in the order below.
	Seat/fuel tank side panels/fuel tank	1	Refer to "SEAT, CARRIERS, FENDERS AND FUEL TANK" in CHAPTER 3.
	Exhaust pipe protector	1	Refer to "ENGINE REMOVAL" in CHAPTER 3.
1	Vacuum chamber breather hose	1	
2	Starter cable/starter plunger	1/1	
3	Throttle valve cover	1	
4	Throttle cable end	1	
5	Throttle cable	1	
6	Carburetor joint (air filter case)	1	
7	Carburetor assembly	1	
8	Drain hose	1	
9	Carburetor joint (intake manifold)	1	
			For installation, reverse the removal procedure.

Downloaded from www.Manualslib.com manuals search engine

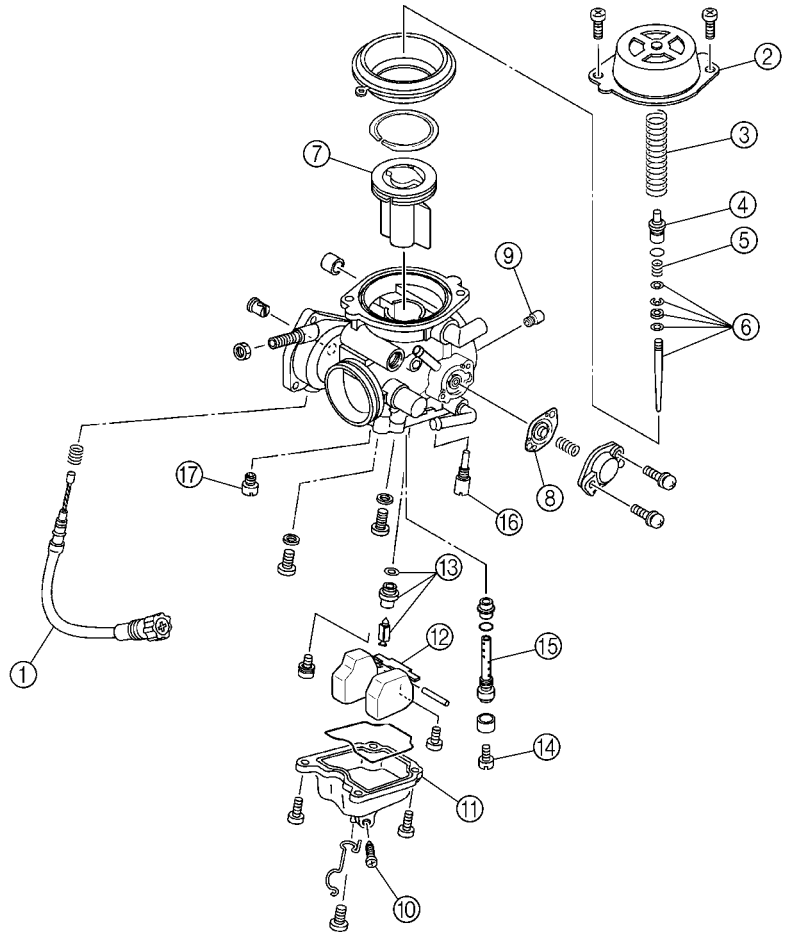

Order	Job name/Part name	Q'ty	Remarks
	Disassembling the carburetor		Remove the parts in the order below.
①	Throttle stop screw	1	
②	Vacuum chamber cover	1	
③	Spring	1	
④	Jet needle holder	1	
⑤	Spring	1	
⑥	Jet needle set	1	
⑦	Piston valve	1	
⑧	Coasting enricher diaphragm	1	
⑨	Pilot air jet	1	
⑩	Drain screw	1	
⑪	Float chamber	1	
⑫	Float	1	Refer to "ASSEMBLING THE CARBURETOR".
⑬	Needle valve set	1	

Downloaded from www.Manualslib.com manuals search engine

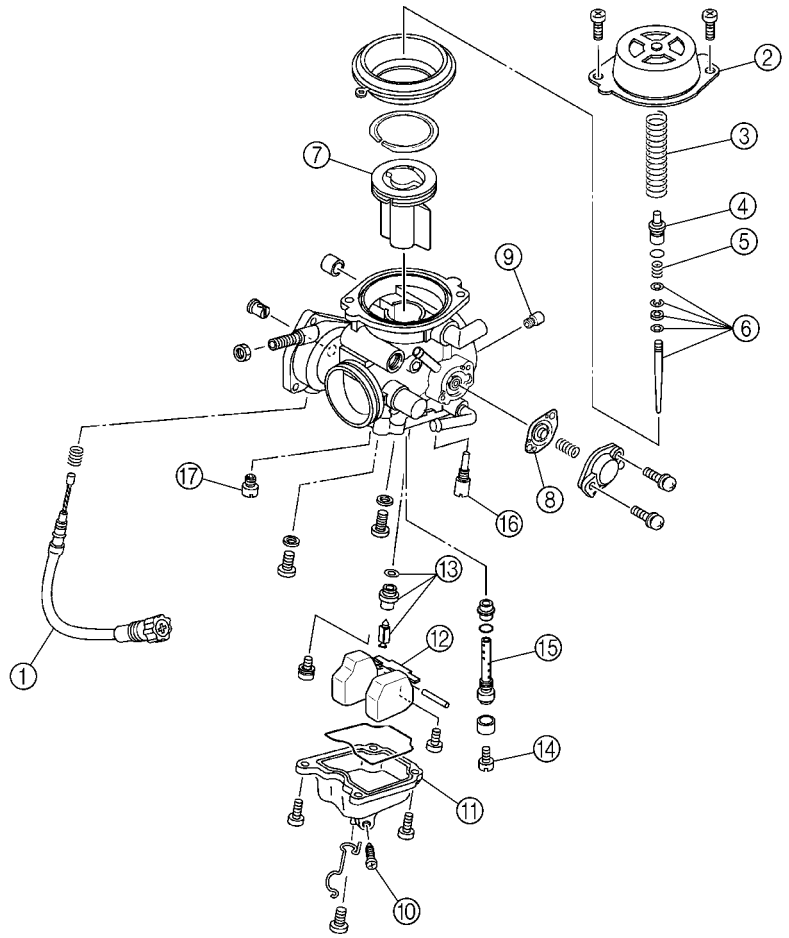

Order	Job name/Part name	Q'ty	Remarks
⑭	Main jet	1	
⑮	Needle jet	1	Refer to "ASSEMBLING THE CARBURETOR".
⑯	Pilot jet	1	
⑰	Starter jet	1	
			For assembly, reverse the disassembly procedure.

Downloaded from www.Manualslib.com manuals search engine

DISASSEMBLING THE CARBURETOR

NOTE:
Before disassembling the carburetor, make sure to note the number of times the pilot screw is turned out from the seated position to its set position.

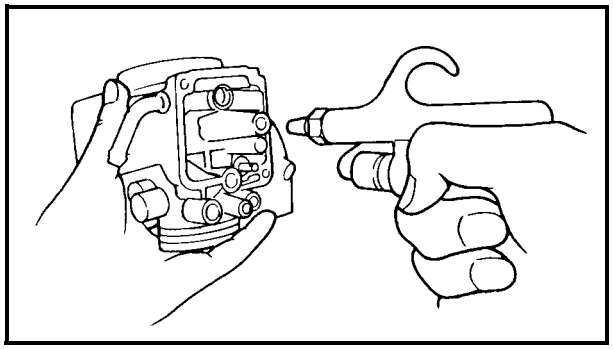

CHECKING THE CARBURETOR

1.Check:
- Carburetor body
- Float chamber
  Cracks/damage → Replace.
- Fuel passage
  Contamination → Clean as indicated.
- Fuel chamber body
  Contamination → Clean.

****

Cleaning steps:
- Wash the carburetor in a petroleum based solvent.
  (Do not use any caustic carburetor cleaning solution.)
- Blow out all of the passages and jets with compressed air.

****

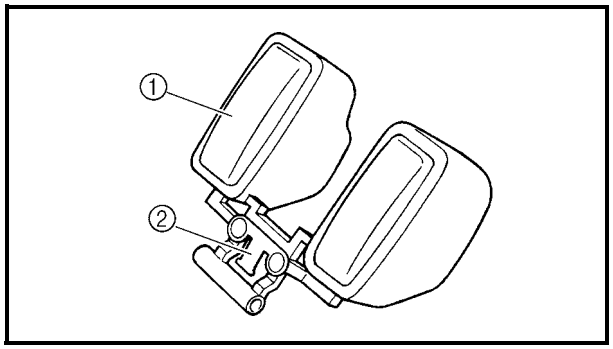

2.Check:
- Float ①
- Float tang ②
  Damage → Replace.

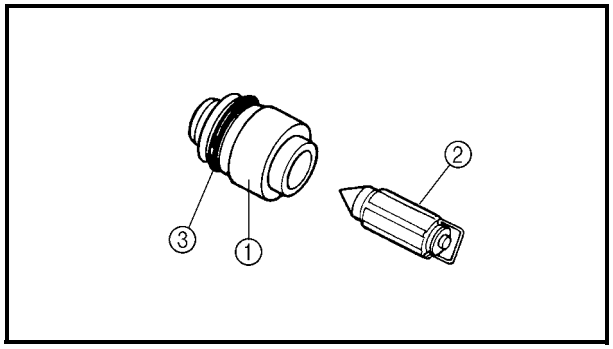

3.Check:
- Valve seat ①
- Needle valve ②
- O-ring ③
  Contamination/wear/damage → Replace as a set.

NOTE:
Always replace the needle valve and valve seat as a set.

Downloaded from www.Manualslib.com manuals search engine

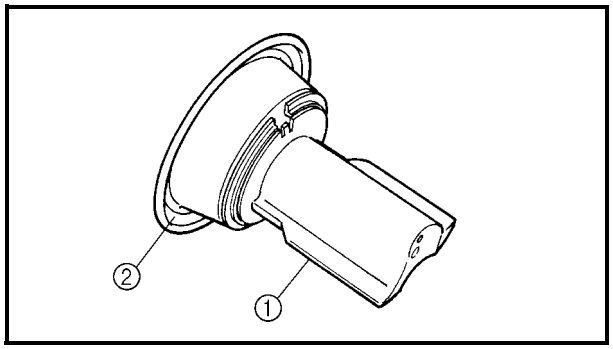

4.Check:
- Piston valve ①
  Scratches/wear/damage → Replace.
- Rubber diaphragm ②
  Tears → Replace.

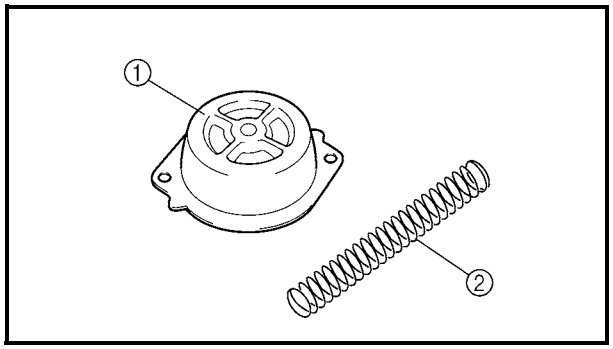

5.Check:
- Vacuum chamber cover ①
- Spring ②
  Cracks/damage → Replace.

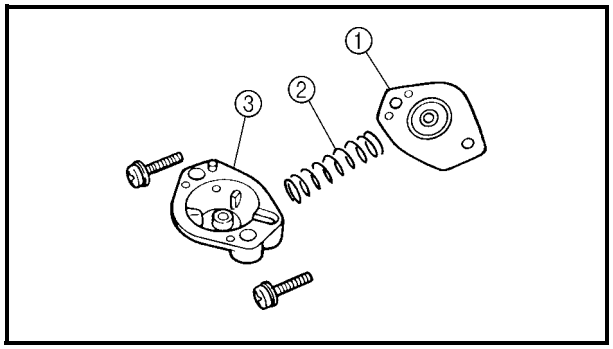

6.Check:
- Diaphragm (coasting enricher) ①
- Spring ②
- Cover ③
  Tears (diaphragm) /damage → Replace.

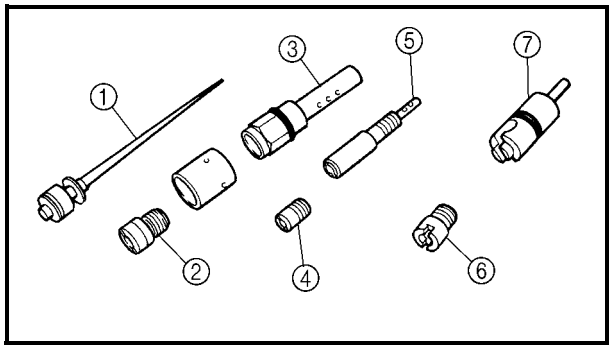

7.Check:
- Jet needle ①
- Main jet ②
- Needle jet ③
- Pilot air jet ④
- Pilot jet ⑤
- Starter jet ⑥
- Starter plunger ⑦
  Bends/wear/damage → Replace.
- Blockage → Blow out the jets with compressed air.

Downloaded from www.Manualslib.com manuals search engine

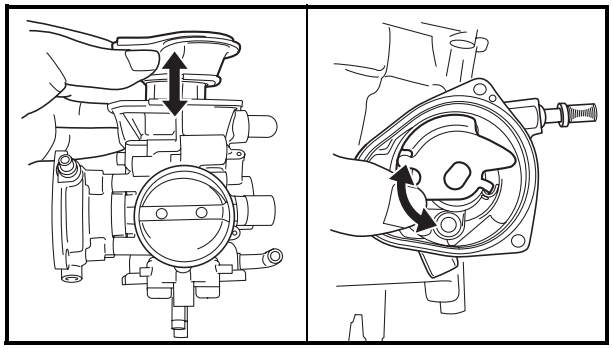

8.Check:
- Free movement (piston valve)
  Sticks → Replace the piston valve guide and the piston valve.
  Insert the piston valve into the carburetor body, and check for free movement.

9.Check:
- Free movement (throttle valve)
  Sticks → Replace.

ASSEMBLING THE CARBURETOR

NOTE:
Before assembling the carburetor, make sure to turn out the pilot screw the same number of times, as noted before disassembly, from the seated position to the set position.

CAUTION:
Before assembling, wash all of the parts in a clean petroleum based solvent.

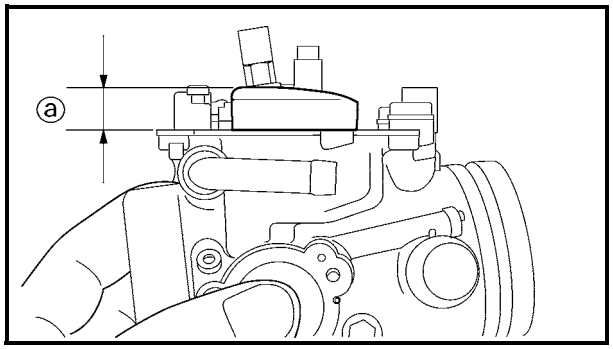

1.Measure:
- Float height ⓐ
  Out of specification → Adjust.

	Float height (F.H.): **13 mm (0.51 in)**

****

Measurement and adjustment steps:
- Hold the carburetor in an upside down position.
- Measure the distance from the front mating surface of the float chamber (gasket removed) to the top of the float.

NOTE:
The float arm should be resting on the needle valve, but not compressing it.

- If the float height is not within the specification, inspect the valve seat and needle valve.

Downloaded from www.Manualslib.com manuals search engine

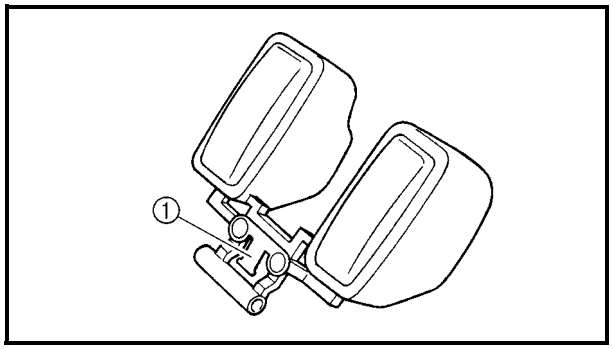

- If either is worn, replace them both.
- If both are fine, adjust the float height by bending the float tang ① on the float.
- Recheck the float height.

****

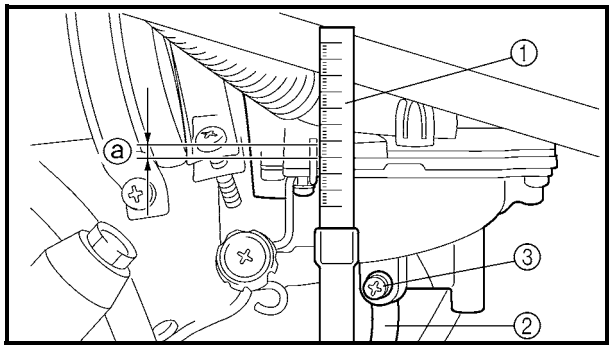

ADJUSTING THE FUEL LEVEL

1.Measure:

- Fuel level ⓐ
  Out of specification → Adjust.

Fuel level:
4.5 mm (0.18 in)
Above the float chamber mating surface

****

Measurement and adjustment steps:

- Place the machine on a level surface.
- Connect the fuel level gauge ① to the drain pipe ②.

Fuel level gauge:
P/N. YM-01312-A, 90890-01312

- Loosen the drain screw ③.
- Hold the gauge vertically next to the float chamber line.
- Measure the fuel level ⓐ with the gauge.
- If the fuel level is incorrect, adjust the fuel level.
- Remove the carburetor.
- Inspect the valve seat and needle valve.
- If either is worn, replace them both.
- If both are fine, adjust the float level by bending the float tang ④ slightly.
- Install the carburetor.
- Recheck the fuel level.

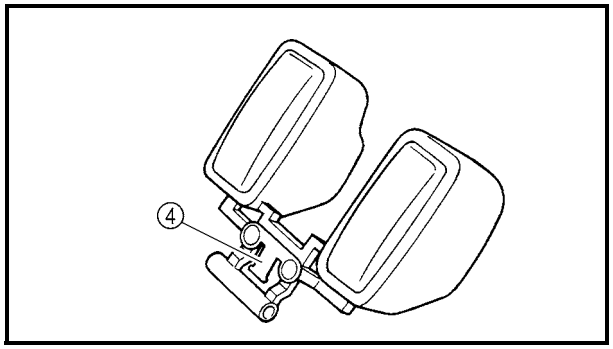

****

Downloaded from www.Manualslib.com manuals search engine

DRIVE TRAIN

TROUBLESHOOTING

The following conditions may indicate damaged shaft drive components:

Symptoms	Possible Causes
1.A pronounced hesitation or “jerky” movement during acceleration, deceleration, or sustained speed. (This must not be confused with engine surging or transmission characteristics.) 2.A “rolling rumble” noticeable at low speed; a high-pitched whine; a “clunk” from a shaft drive component or area. 3.A locked-up condition of the shaft drive train mechanism, no power transmitted from the engine to the front and/or rear wheel.	A. Bearing damage. B. Improper gear lash. C. Gear tooth damage. D. Broken drive shaft. E. Broken gear teeth. F. Seizure due to lack of lubrication. G. Small foreign objects lodged between the moving parts.

NOTE:

Areas A, B, and C above may be extremely difficult to diagnose. The symptoms are quite subtle and difficult to distinguish from normal machine operating noise. If there is reason to believe these components are damaged, remove the components and inspect them.

Inspection notes

1.Investigate any unusual noises.

****

The following “noises” may indicate a mechanical defect:

a.A “rolling rumble” noise during coasting, acceleration, or deceleration. The noise increases with front and/or rear wheel speed, but it does not increase with higher engine or transmission speeds.
Diagnosis: Possible wheel bearing damage.

b.A “whining” noise that varies with acceleration and deceleration.
Diagnosis: Possible incorrect reassembly, too-little gear lash.

Downloaded from www.Manualslib.com manuals search engine

CAUTION:

Too little gear lash is extremely destructive to the gear teeth. If a test ride following reassembly indicates this condition, stop riding immediately to minimize gear damage.

c.A slight “thunk” evident at low speed operation. This noise must be distinguished from normal machine operation.
Diagnosis: Possible broken gear teeth.

⚠ WARNING

Stop riding immediately if broken gear teeth are suspected. This condition could result in the shaft drive assembly locking up, causing loss of control of the machine and possible injury to the rider.

****

2.Inspect:
- Drained oil
  Drained oil shows large amounts of metal particles → Check the bearing for seizure.

NOTE:

A small amount of metal particles in the oil is normal.

3.Inspect:
- Oil leakage

****

Inspection steps:
- Clean the entire machine thoroughly, then dry it.
- Apply a leak-localizing compound or dry powder spray to the shaft drive.
- Road test the machine for the distance necessary to locate the leak.
  Leakage → Inspect the component housing, gasket, and/or seal for damage.
  Damage → Replace the component.

NOTE:
- An apparent oil leak on a new or nearly new machine may be the result of a rust-preventative coating or excessive seal lubrication.
- Always clean the machine and recheck the suspected location of an apparent leakage.

****

Downloaded from www.Manualslib.com manuals search engine

Troubleshooting chart

When basic condition “a” and “b” exist, check the following points:

Elevate and spin both wheels. Feel for wheel bearing damage.

YES → Replace the wheel bearing. (Refer to “STEERING SYSTEM” and “REAR KNUCKLE AND STABILIZER” in CHAPTER 8.)

NO ↓

Check the wheel nuts and hub nuts for tightness.

NO → Torque to specification. (Refer to “FRONT WHEELS AND BRAKE DISCS” and “REAR WHEELS AND BRAKE DISC” in CHAPTER 8.)

YES ↓

Check the front constant velocity joint. Feel for bearing damage.

NO → Constant velocity joint bearings and differential gear bearings are probably not damaged. Repeat the test or remove the individual components.

YES ↓

Check the rear brake adjustment.

NO → Adjust per instructions. (Refer to “ADJUSTING THE REAR BRAKE” in CHAPTER 3.)

YES ↓

Check the rear constant velocity joint. Feel for bearing damage.

NO → Constant velocity joint bearings and final drive gear bearings are probably not damaged. Repeat the test or remove the individual components.

YES ↓

Remove the drive shaft components.

Downloaded from www.Manualslib.com manuals search engine

FRONT CONSTANT VELOCITY JOINTS AND DIFFERENTIAL GEAR

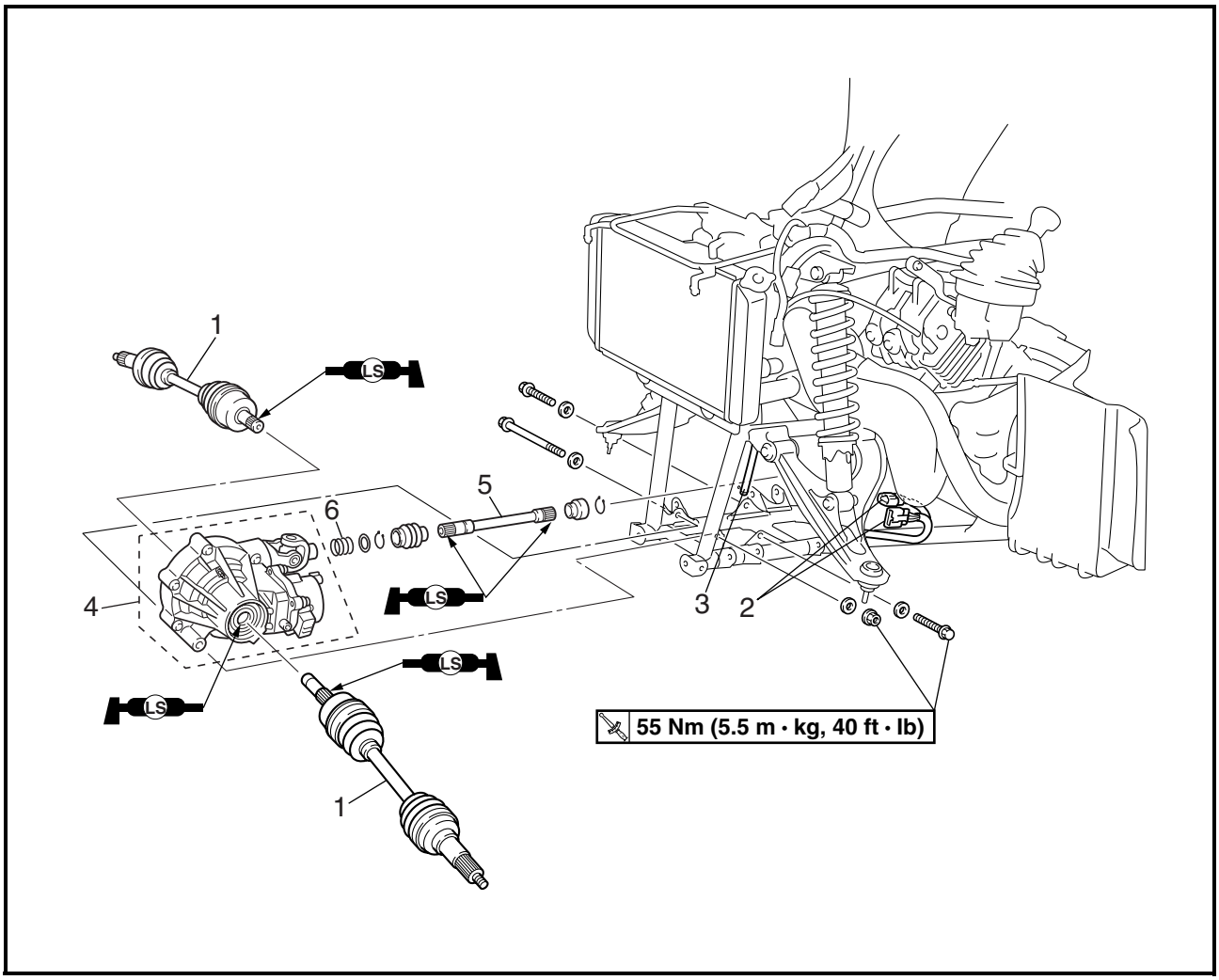

Order	Job name/Part name	Q'ty	Remarks
	Removing the front constant velocity joint and differential gear		Remove the parts in the order below.
	Engine skid plate (front)		Refer to "SEAT, CARRIERS, FENDERS AND FUEL TANK" in CHAPTER 3.
	Front fender		
	Differential gear oil		Drain.
	Steering knuckle		Refer to "STEERING SYSTEM" in CHAPTER 8.
	Front arms (lower)		Refer to "FRONT ARMS AND FRONT SHOCK ABSORBER" in CHAPTER 8.
	Brake master cylinder cover		Refer to "FRONT AND REAR BRAKES" in CHAPTER 8.
1	Constant velocity joint	2	
2	Gear motor coupler/on-command four-wheel drive switch and differential gear lock switch coupler	1/1	Disconnect.
3	Differential gear case breather hose	1	Disconnect.

Downloaded from www.Manualslib.com manuals search engine

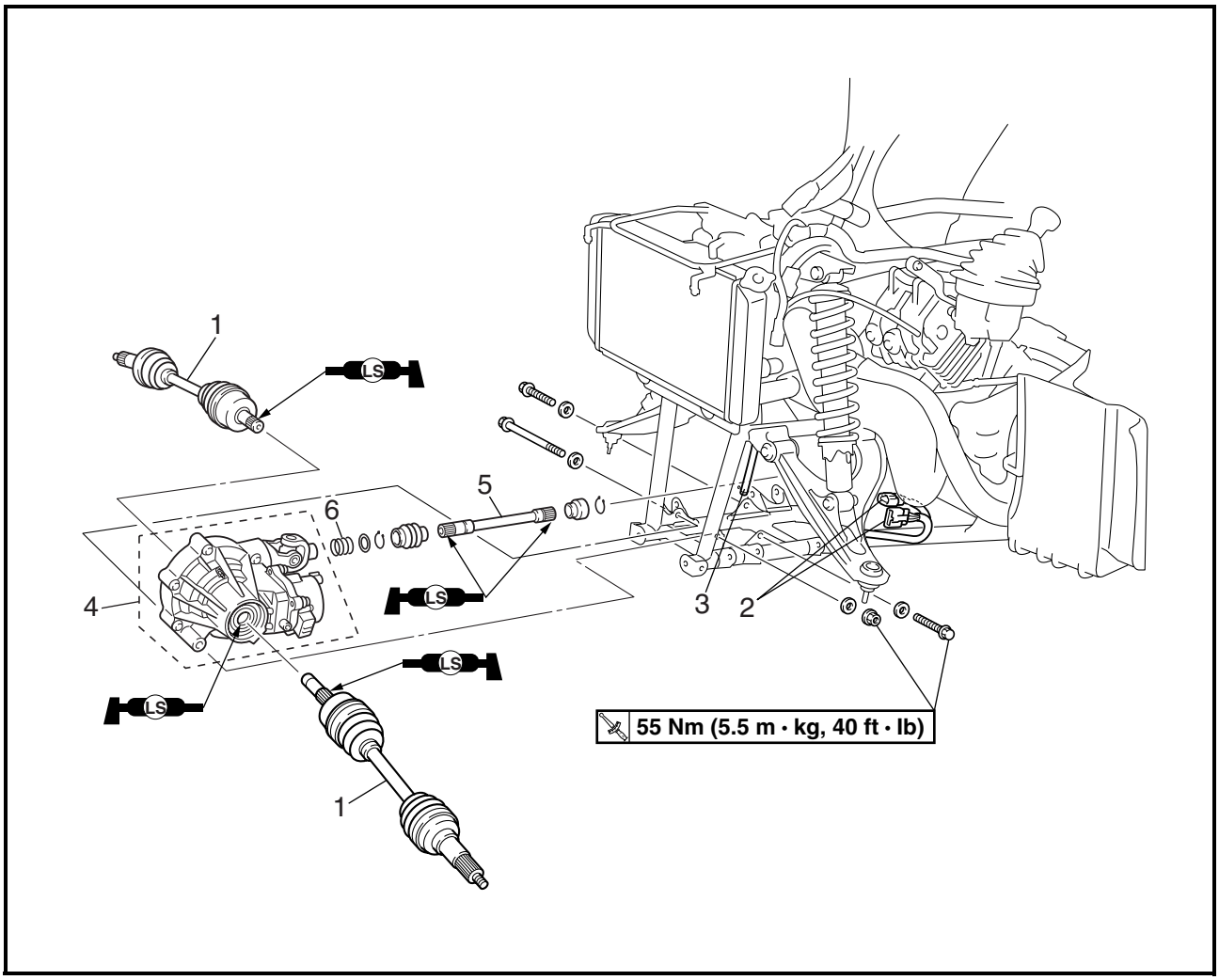

Order	Job name/Part name	Q'ty	Remarks
4	Differential gear	1	
5	Drive shaft	1	
6	Compression spring	1	
			For installation, reverse the removal procedure.

Downloaded from www.Manualslib.com manuals search engine

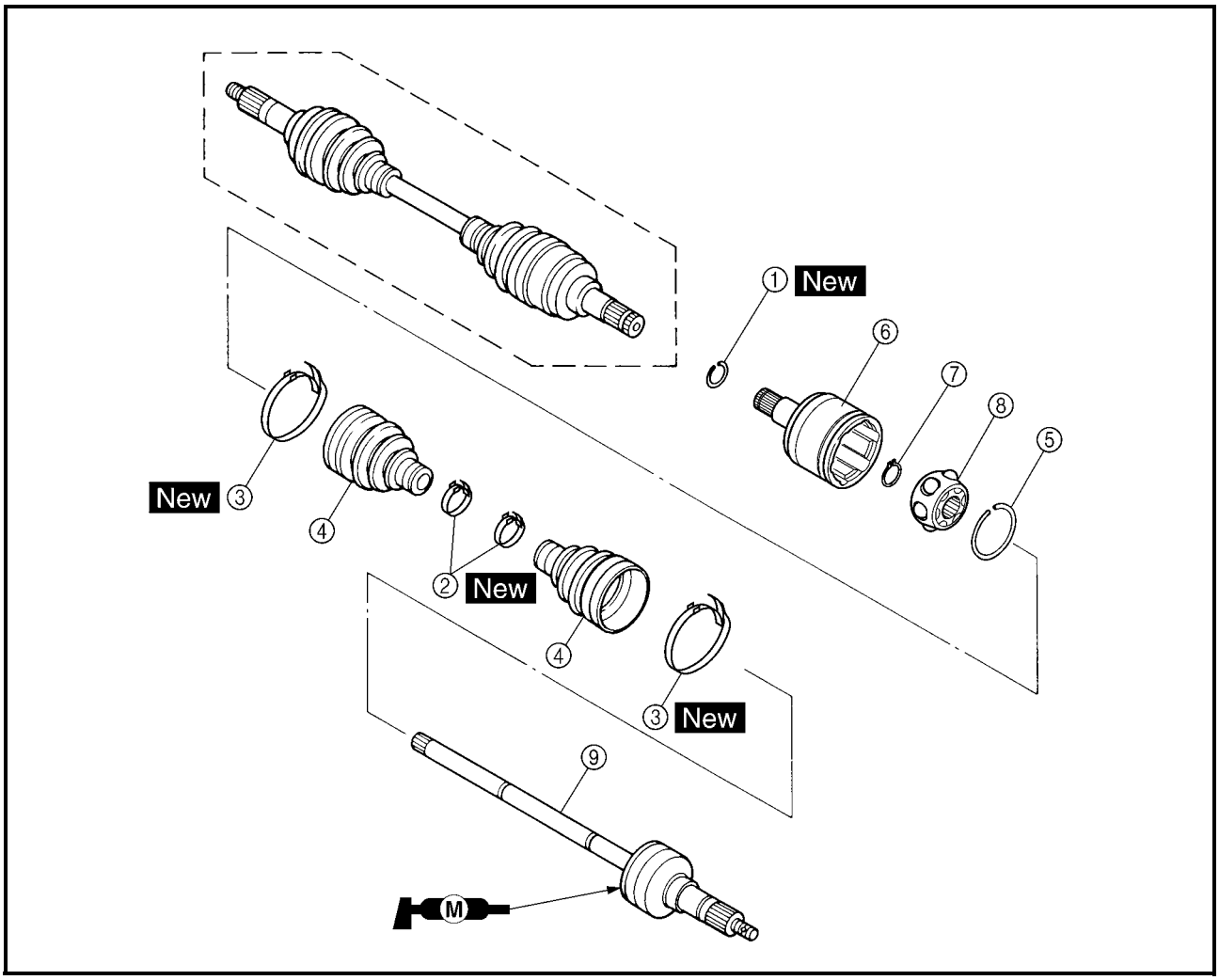

Order	Job name/Part name	Q'ty	Remarks
	Disassembling the constant velocity joint		Remove the parts in the order below.
①	Circlip	1	
②	Boot band	2	Refer to "ASSEMBLING THE FRONT CONSTANT VELOCITY JOINT"
③	Boot band	2	
④	Dust boot	2	
⑤	Circlip	1	
⑥	Double off-set joint	1	
⑦	Snap ring	1	
⑧	Ball bearing	1	
⑨	Joint shaft assembly	1	
			For assembly, reverse the disassembly procedure.

Downloaded from www.Manualslib.com manuals search engine

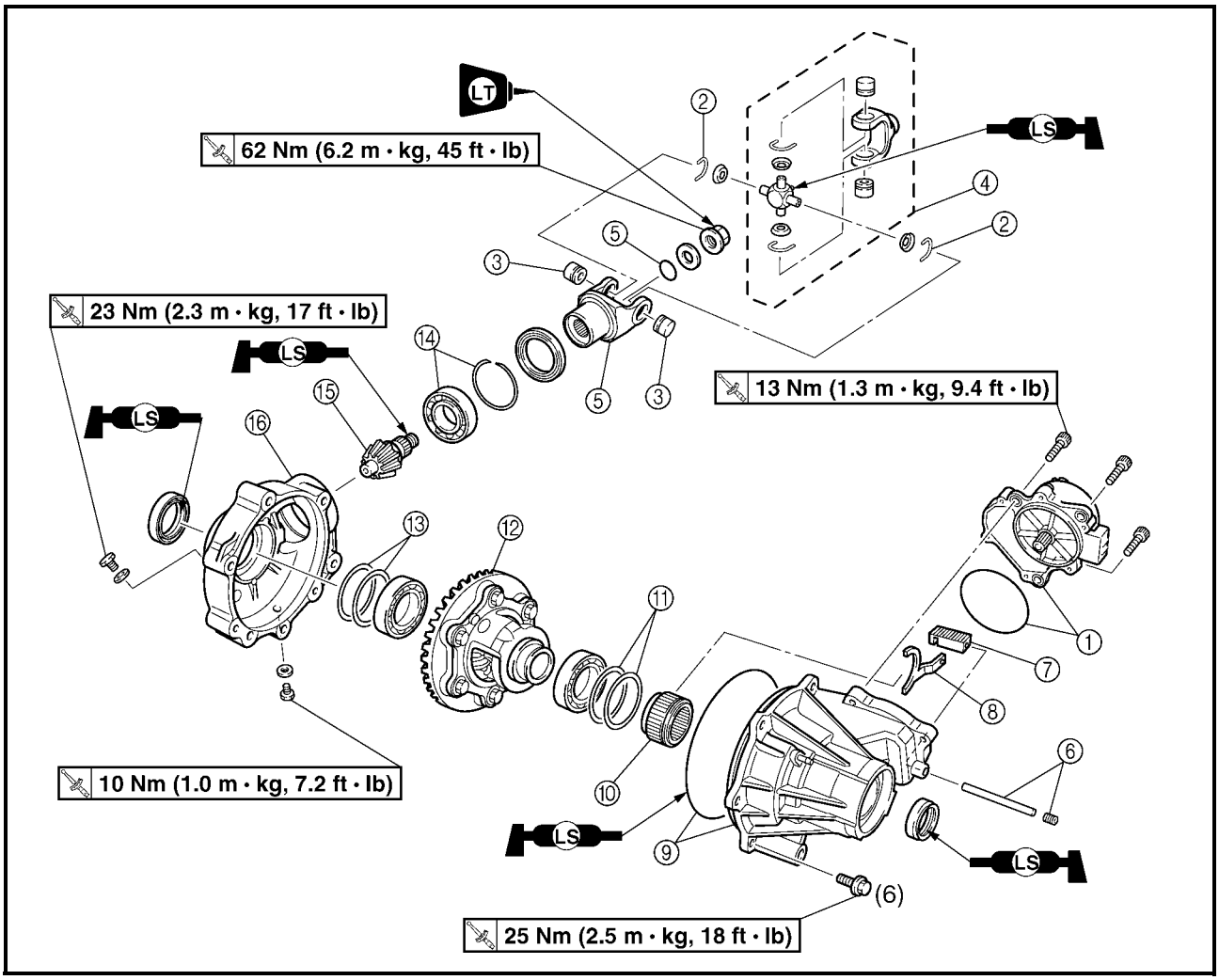

Order	Job name/Part name	Q'ty	Remarks
	Disassembling the differential gear		Remove the parts in the order below.
①	Gear motor/O-ring	1/1	**NOTE:** Be sure not to disassemble gear motor and remove the pinion gear.
②	Circlip	2	Refer to "DISASSEMBLING AND ASSEMBLING THE UNIVERSAL JOINT".
③	Bearing	2	
④	Universal joint	1	
⑤	Universal joint yoke/O-ring	1/1	
⑥	Stopper bolt/shaft	1/1	
⑦	Shift fork sliding gear	1	
⑧	Shift fork	1	
⑨	Differential gear case cover	1	
⑩	Drive clutch	1	
⑪	Shim (left)		

Downloaded from www.Manualslib.com manuals search engine

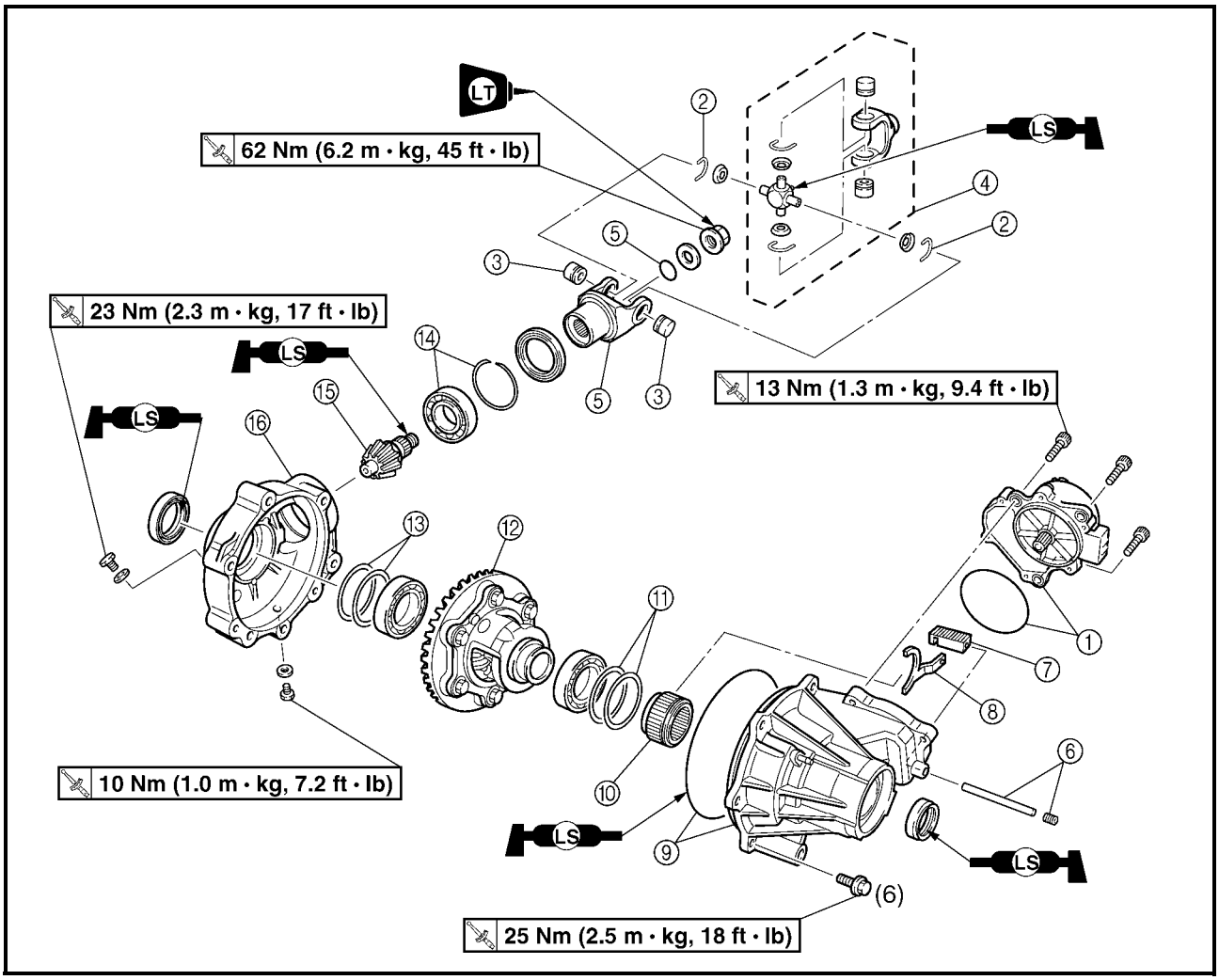

Order	Job name/Part name	Q'ty	Remarks
⑫	Differential gear assembly	1	
⑬	Shim (right)	1	
⑭	Circlip/bearing	1/1	
⑮	Drive pinion gear	1	
⑯	Differential gear case	1	
			For assembly, reverse the disassembly procedure.

Downloaded from www.Manualslib.com manuals search engine

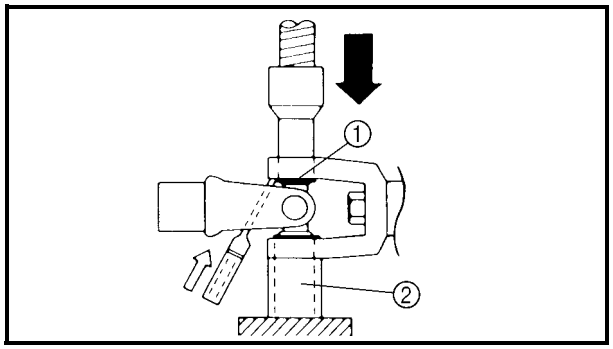

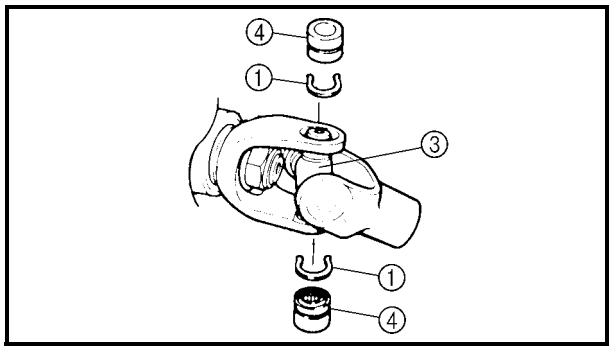

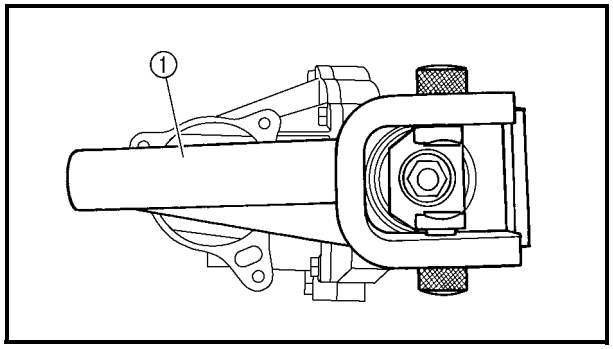

DISASSEMBLING THE UNIVERSAL JOINT

1.Remove:
- Universal joint

****

Removal steps:
- Remove the circlips ①.
- Place the U-joint in a press.
- With a suitable diameter pipe ② beneath the yoke ③, press the bearing ④ into the pipe as shown.

NOTE:
It may be necessary to lightly tap the yoke with a punch.

- Repeat the steps for the opposite bearing.
- Remove the yoke.

NOTE:
it may be necessary to lightly tap the yoke with a punch.

****

2.Remove:
- Universal joint yoke
  Use a universal joint holder ①.

	Universal joint holder: **P/N. YM-04062, 90890-04062**

Downloaded from www.Manualslib.com manuals search engine

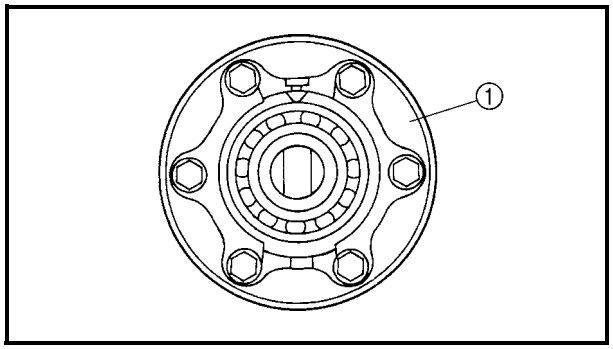

REMOVING THE RING GEAR

1.Remove:
- Ring gear ①

NOTE:
The ring gear and the differential gear cover should be fastened together. Do not disassemble the differential gear.

CAUTION:
The differential gears are assembled into a proper unit at the factory by means of specialized equipment. Do not attempt to disassemble this unit. Disassembly will result in the malfunction of the unit.

CHECKING THE CONSTANT VELOCITY JOINT

1.Check:
- Double off-set joint spline
- Ball joint spline
- Shaft spline
  Wear/damage → Replace.

2.Check:
- Dust boots
  Cracks/damage → Replace.

CAUTION:
Always use a new boot band.

3.Check:
- Balls and ball races
- Inner surface of double off-set joint
  Pitting/wear/damage → Replace.

CHECKING THE DIFFERENTIAL GEAR

1.Check:
- Gear teeth
  Pitting/galling/wear → Replace drive pinion gear and ring gear as a set.
- Bearing
  Pitting/damage → Replace.
- Oil seal
- O-ring
  Damage → Replace.

Downloaded from www.Manualslib.com manuals search engine

2.Check:
- Drive shaft splines
- Universal joints
- Front drive gear splines
  Wear/damage → Replace.
- Spring
  Fatigue → Replace.
  Move the spring up and down.

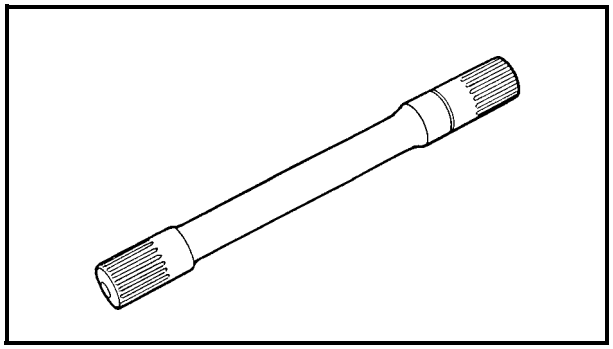

3.Check:
- Front drive shaft
  Bends → Replace.

⚠ WARNING

Do not attempt to straighten a bent shaft; this may dangerously weaken the shaft.

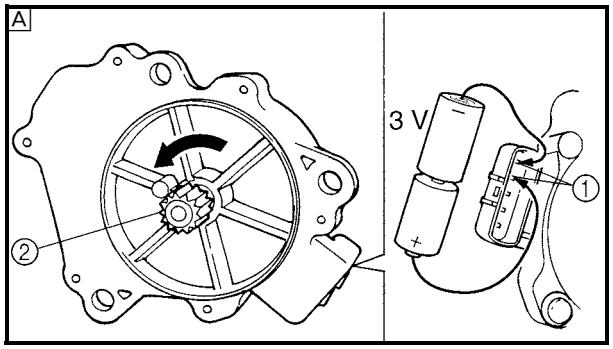

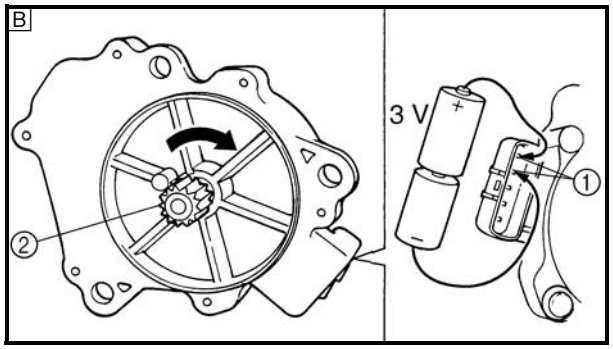

CHECKING THE GEAR MOTOR

1.Check:
- Gear motor

****

Checking steps:
- Connect two C size batteries to the gear motor terminals ①. (as shown illustration)

CAUTION:

Do not use a 12 V battery to operate the pinion gear.

A Check that the pinion gear ② turns counter-clockwise.
B Check that the pinion gear ② turns clockwise.

NOTE:

Be sure not to disassemble gear motor and remove the pinion gear.

****

ASSEMBLING THE FRONT CONSTANT VELOCITY JOINT

1.Apply:
- Molybdenum disulfide grease
  (into the ball joint assembly)

NOTE:

Molybdenum disulfide grease is included in the repair kit.

Downloaded from www.Manualslib.com manuals search engine

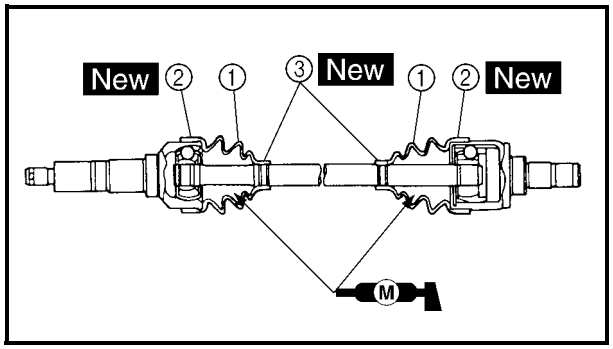

2.Install:
- Dust boots ①
- Boot bands ②, ③ New

****

Installation steps:

- Apply molybdenum disulfide grease into the dust boots.

	Molybdenum disulfide grease: 40 g (1.4 oz) per dust boot

- Install the dust boots.
- Install the dust boot bands.

NOTE:
- The new boot bands may differ from the original ones.
- The dust boots should be fastened with the boot bands ③ at the grooves in the joint shaft.

****

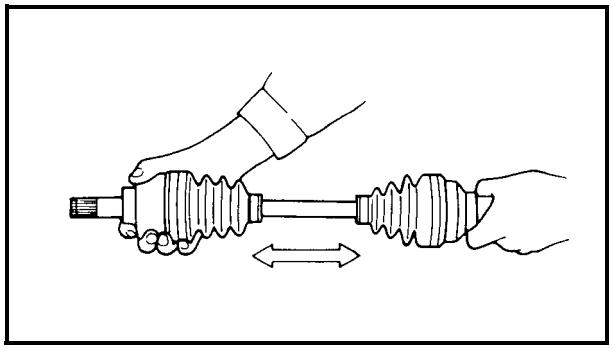

3.Check:
- Free play (thrust movement)
  Excessive play → Replace the joint assembly.

ASSEMBLING THE DIFFERENTIAL GEAR

1.Measure:
- Gear lash
  Refer to “MEASURING AND ADJUSTING THE DIFFERENTIAL GEAR LASH”.

2.Install:
- Gear motor

Downloaded from www.Manualslib.com manuals search engine

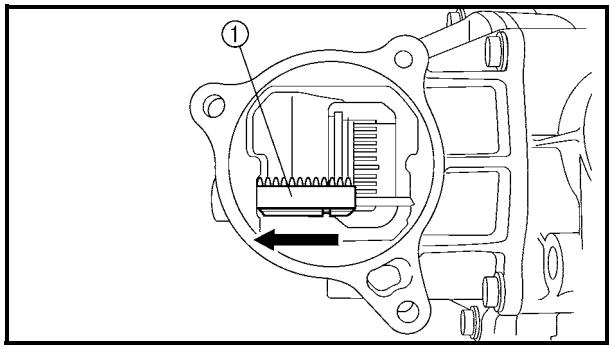

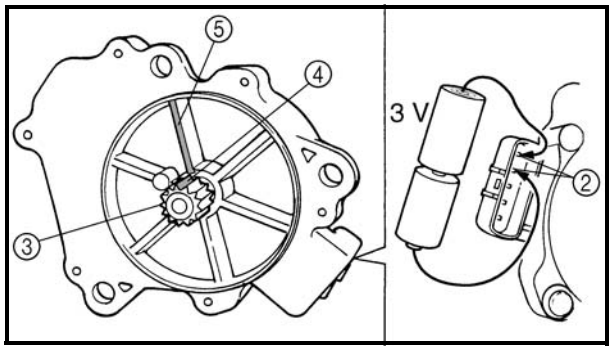

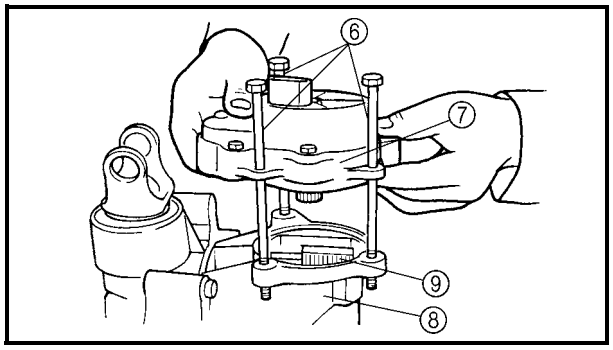

****

Installation steps:

- Slide the shift fork sliding gear ①, which is installed to the differential gear, to the left to put it into the 2WD mode.
- Connect two C size batteries to the gear motor terminal ② to operate the pinion gear ③, and operate it until the paint mark ④ on the gear is aligned with the paint mark ⑤ on the gear motor case.

CAUTION:

Do not use a 12 V battery to operate the pinion gear.

- Insert 8 mm bolts ⑥ into the gear motor ⑦ and use them as a guide to set the motor on the differential gear assembly ⑧ so that the shift fork sliding gear ⑨ does not move.

CAUTION:

If the position of the shift fork sliding gear is moved, the position of the differential gear and the indicator light display may differ, and the 2WD or differential lock mode may not be activated.

- Remove the 8 mm bolts, and then install the motor with the gear motor bolts.

	Bolts (gear motor) **13 Nm (1.3 m • kg, 9.4 ft • lb)**

****

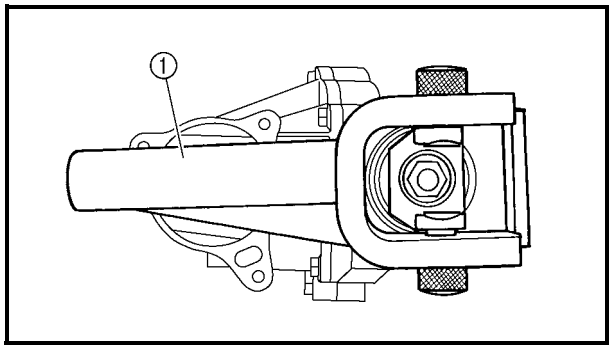

3.Install:

- Universal joint yoke
- O-ring
- Washer
- Nut **62 Nm (6.2 m • kg, 45 ft • lb)**

  Use a universal joint holder ①.

	Universal joint holder: **P/N. YM-04062, 90890-04062**

Downloaded from www.Manualslib.com manuals search engine

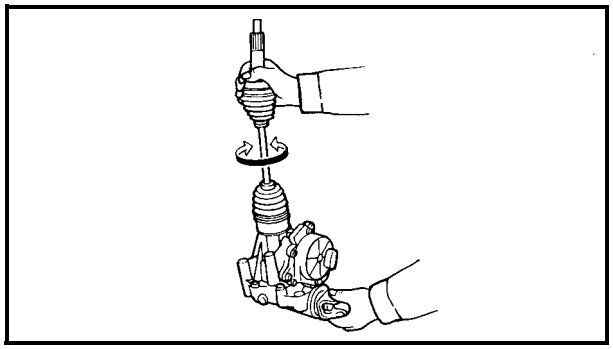

4.Check:
- Differential gear operation
  Unsmooth operation → Replace the differential gear assembly.
  Insert the double off-set joint into the differential gear, and turn the gear back and forth.

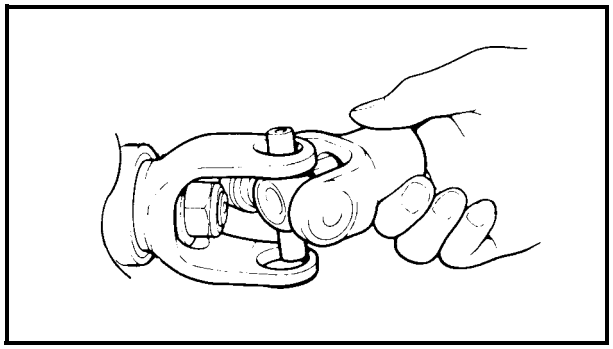

INSTALLING THE UNIVERSAL JOINT

1.Install:
- Universal joint

****

Installation steps:
- Install the opposite yoke into the U-joint.
- Apply wheel bearing grease to the bearings.
- Install the bearing ① onto the yoke.

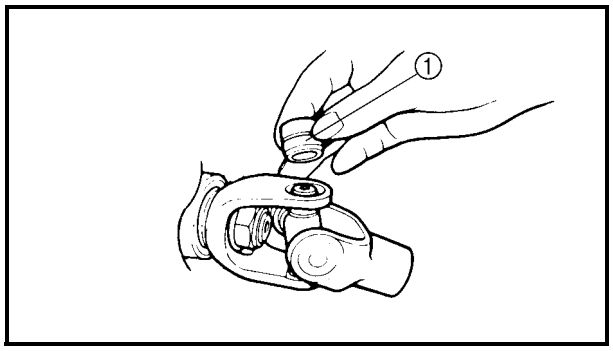

CAUTION:

Check each bearing. The needles can easily fall out of their races. Slide the yoke back and forth on the bearings; the yoke will not go all the way onto a bearing if a needle is out of plate.

- Press each bearing into the U-joint using a suitable socket.

NOTE:

The bearing must be inserted far enough into the U-joint so that the circlip can be installed.

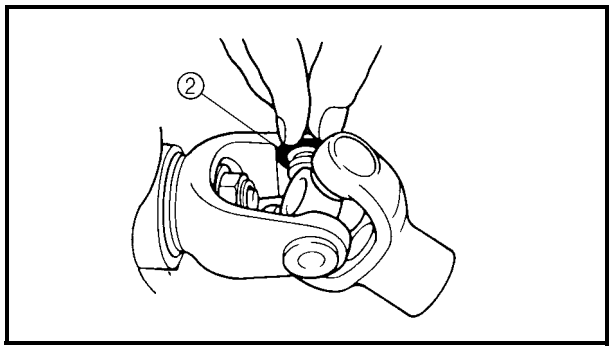

- Install the circlips ② into the groove of each bearing.

****

Downloaded from www.Manualslib.com manuals search engine

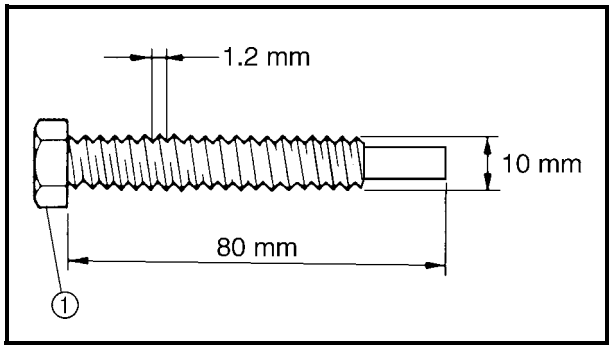

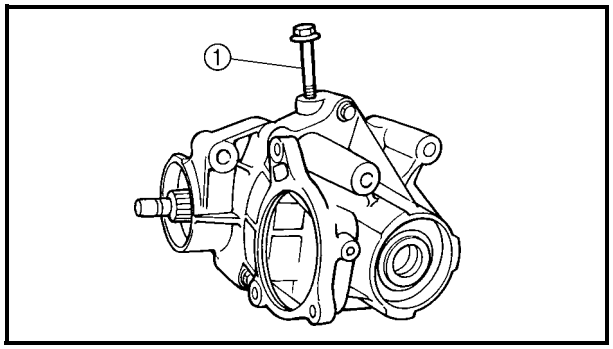

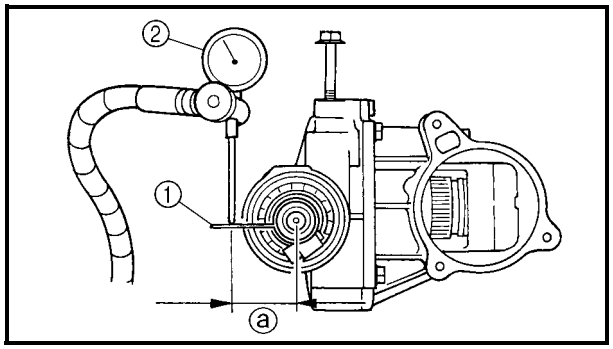

MEASURING AND ADJUSTING THE DIFFERENTIAL GEAR LASH

Measuring the differential gear lash

1. Secure the gear case in a vise or another supporting device.
2. Remove:
   - Drain plug
   - Gasket
3. Install:
   - A bolt of the specified size ①
     (into the drain plug hole)

CAUTION:

Finger tighten the bolt until it holds the ring gear. Otherwise, the ring gear will be damaged.

4. Attach:
   - Gear lash measurement tool ①
   - Dial gauge ②

	Gear lash measurement tool: **P/N. YM-01467, 90890-01467**

ⓐ Measuring point is 21 mm (0.83 in)

5. Measure:
   - Gear lash
     Gently rotate the gear coupling from engagement to engagement.

	Differential gear lash: **0.05 ~ 0.25 mm** **(0.0020 ~ 0.0098 in)**

NOTE:

Measure the gear lash at four positions. Rotate the shaft 90° each time.

Downloaded from www.Manualslib.com manuals search engine

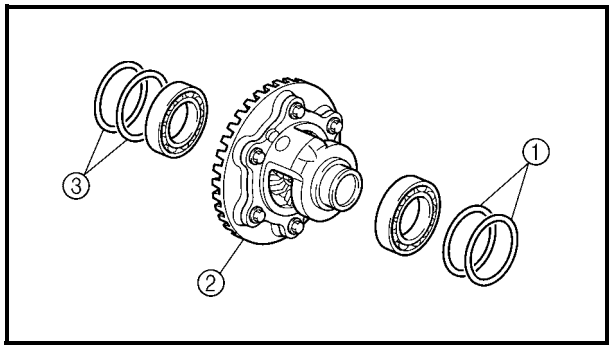

Adjusting differential gear lash

1.Remove:
- Shim(s) (left) ①
- Differential gear assembly ②
- Shim(s) (right) ③

2.Adjust:
- Gear lash

****

Adjustment steps:

- Select the suitable shims using the following chart.

Too little gear lash	**Reduce shim thickness.**
Too large gear lash	**Increase shim thickness.**

- If it is necessary to increase by more than 0.05 mm (0.002 in):
  Reduce right shim thickness by 0.1 mm (0.004 in) for every 0.1 mm (0.004 in) of left shim increase.
- If it is necessary to reduce by more than 0.1 mm (0.004 in):
  Increase right shim thickness by 0.1 mm (0.004 in) for every 0.1 mm of left shim decreased.

	Ring gear shim (left and right)	
Thickness (mm)	**0.1** **0.2** **0.3** **0.4** **0.5**	**1.0** **1.5** **2.0** **2.5**

Downloaded from www.Manualslib.com manuals search engine

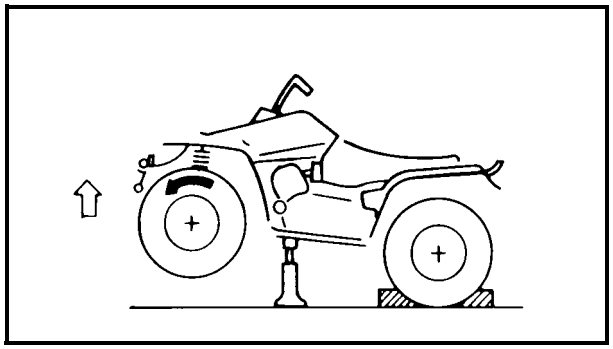

CHECKING THE DIFFERENTIAL GEAR OPERATION

1. Block the rear wheels, and elevate the front wheels by placing a suitable stand under the frame.
2. Remove the wheel cap and cotter pin from the axle nut (right or left).
3. Measure the starting torque of the front wheel (i.e., differential gear preload) with the torque wrench.

NOTE:
- Repeat this step several times to obtain an average figure.
- During this test, the other front wheel will turn in the opposite direction.

Front wheel starting torque:
(differential gear preload):
New unit:
17 ~ 25 Nm
(1.7 ~ 2.5 m • kg, 12 ~ 18 ft • lb)
Minimum:
10 Nm (1.0 m • kg, 7.2 ft • lb)

4. Out of specification → Replace the differential gear assembly.
5. Within specification → Install the new cotter pin and wheel cap.

Downloaded from www.Manualslib.com manuals search engine

REAR CONSTANT VELOCITY JOINT/FINAL DRIVE GEAR AND DRIVE SHAFT

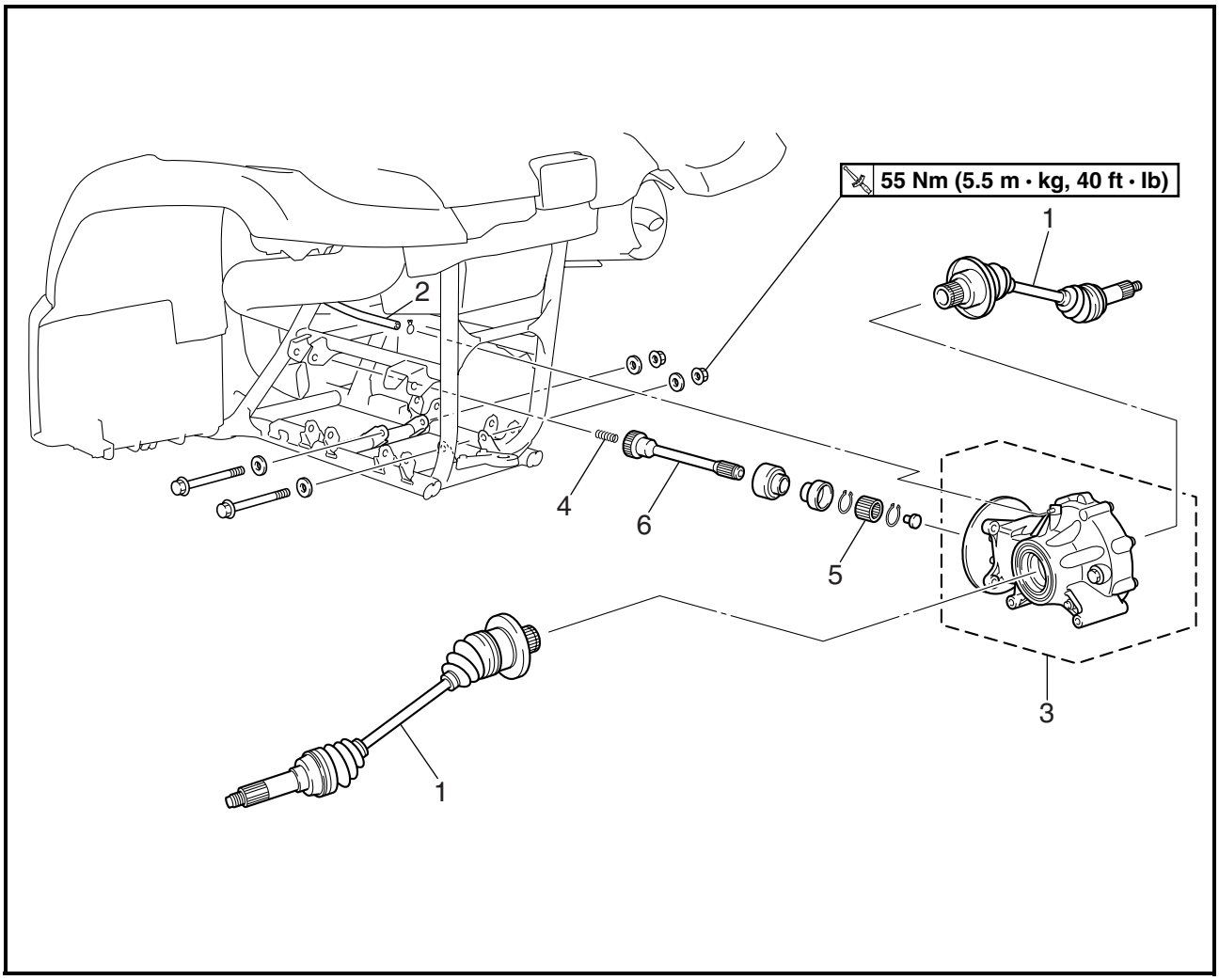

Order	Job name/Part name	Q'ty	Remarks
	Removing the rear constant velocity joint, final drive gear assembly and drive shaft		Remove the parts in the order below.
	Final gear oil		Drain.
	Rear arm (lower)		Refer to "REAR ARMS AND REAR SHOCK ABSORBER" in CHAPTER 8.
	Brake caliper assembly		Refer to "REAR BRAKE CALIPER" in CHAPTER 8.
1	Rear constant velocity joint	2	
2	Final drive gear case breather hose	1	Disconnect.
3	Final drive gear assembly	1	
4	Compression spring	1	
5	Coupling gear	1	
6	Drive shaft	1	
			For installation, reverse the removal procedure.

Downloaded from www.Manualslib.com manuals search engine

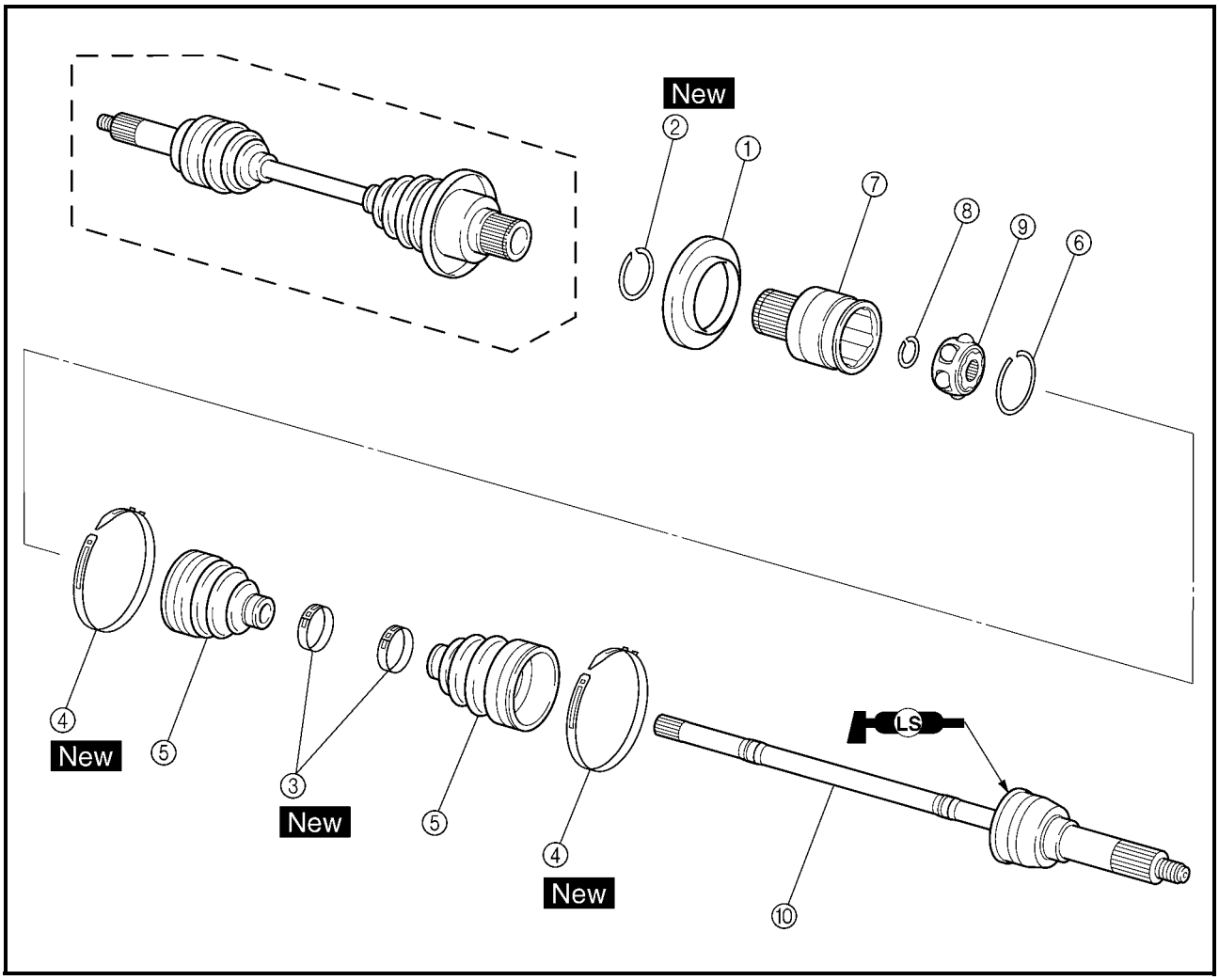

Order	Job name/Part name	Q'ty	Remarks
	Disassembling the rear constant velocity joint		Remove the parts in the order below.
①	Dust cover	1	
②	Circlip	1	
③	Boot band	2	Refer to "CONSTANT VELOCITY JOINT ASSEMBLY".
④	Boot band	2	
⑤	Dust boot	2	
⑥	Circlip	1	
⑦	Double off-set joint	1	
⑧	Snap ring	1	
⑨	Ball bearing	1	
⑩	Joint shaft assembly	1	
			For assembly, reverse the disassembly procedure.

Downloaded from www.Manualslib.com manuals search engine

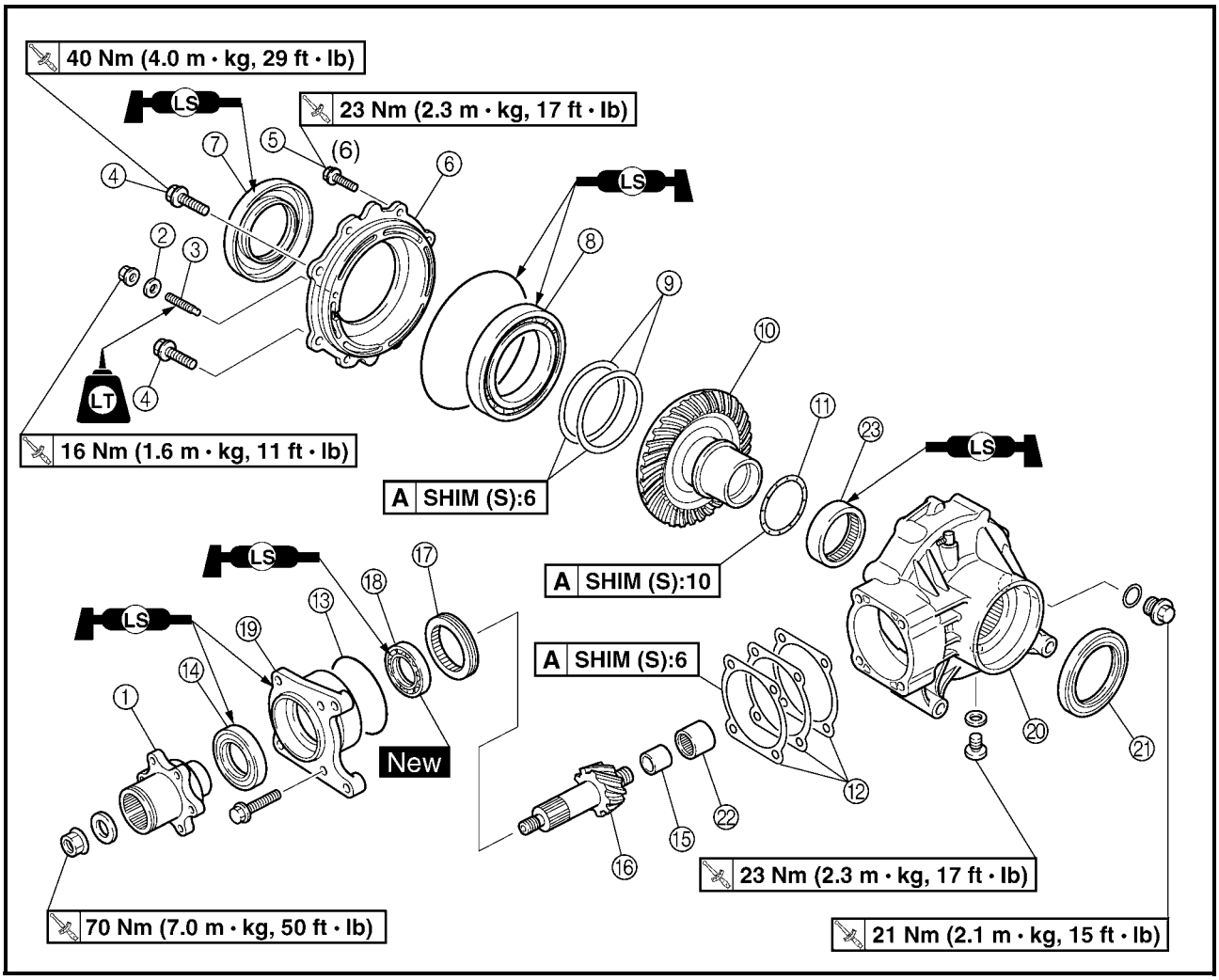

Order	Job name/Part name	Q'ty	Remarks
	Disassembling the final drive gear		Remove the parts in the order below.
	Rear brake disc		Refer to "REAR WHEELS AND BRAKE DISC" in CHAPTER 8.
①	Boss	1	
②	Ring gear stopper shim	1	
③	Ring gear stopper	1	
④	Bolt	2	**NOTE:** Working in a crisscross pattern, loosen each bolt 1/4 of a turn. After all the bolts are loosened, remove them.
⑤	Bolt	6	
⑥	Ring gear bearing housing	1	
⑦	Oil seal	1	
⑧	Bearing	1	
⑨	Ring gear shim	1	
⑩	Ring gear	1	

Downloaded from www.Manualslib.com manuals search engine

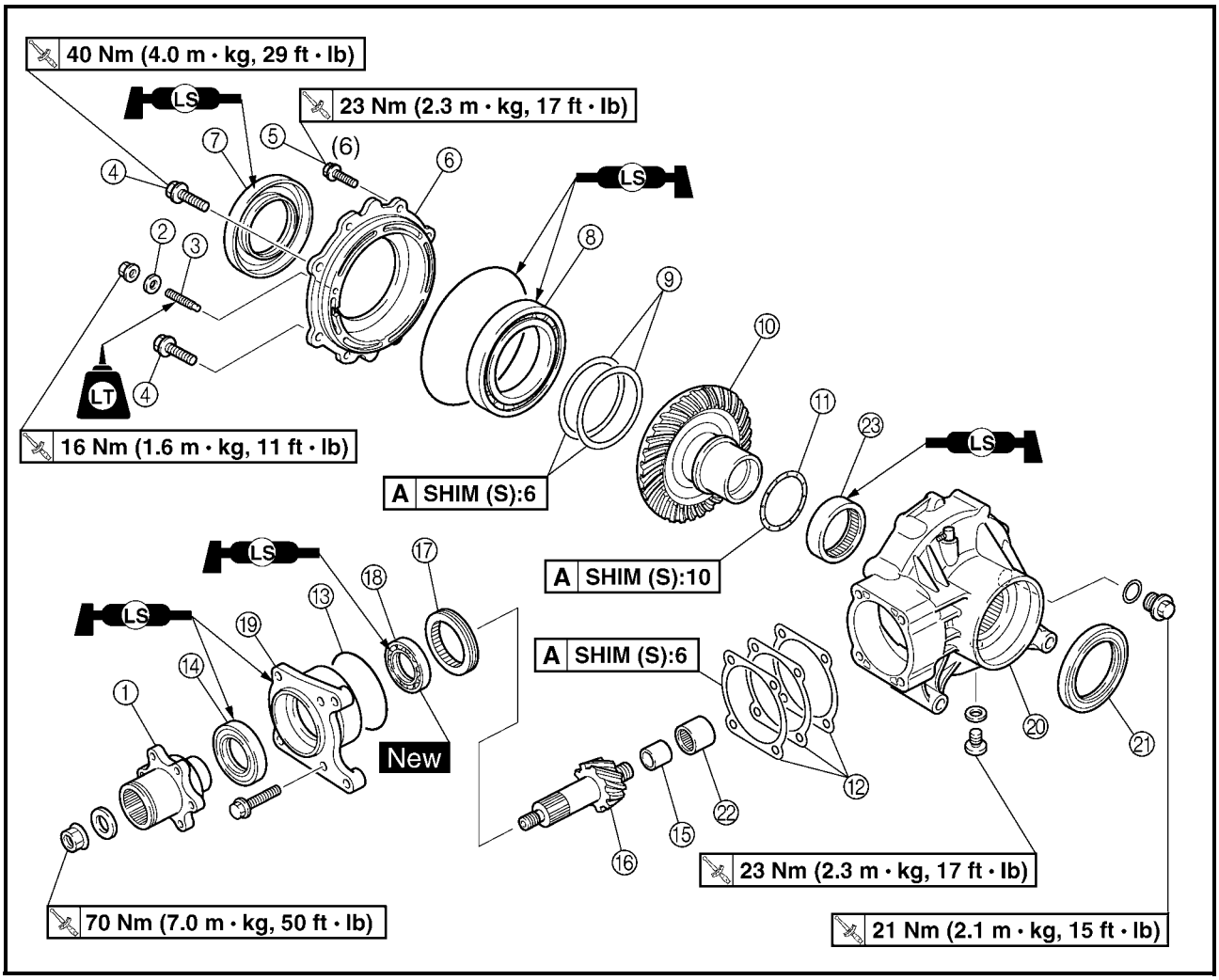

Order	Job name/Part name	Q'ty	Remarks
⑪	Thrust washer	1	Refer to "ASSEMBLING THE FINAL DRIVE GEAR".
⑫	Final drive pinion gear shim	1	
⑬	O-ring	1	
⑭	Oil seal	1	
⑮	Inner race	1	
⑯	Final drive pinion gear	1	
⑰	Bearing retainer	1	
⑱	Bearing	1	
⑲	Pinion gear bearing housing	1	
⑳	Final drive gear case	1	
㉑	Oil seal	1	
㉒	Bearing	1	Refer to "REMOVING AND DISASSEMBLING THE FINAL DRIVE ROLLER BEARING".
㉓	Bearing	1	Refer to "REMOVING AND DISASSEMBLING THE FINAL DRIVE ROLLER BEARING". For assembly, reverse the disassembly procedure.

Downloaded from www.Manualslib.com manuals search engine

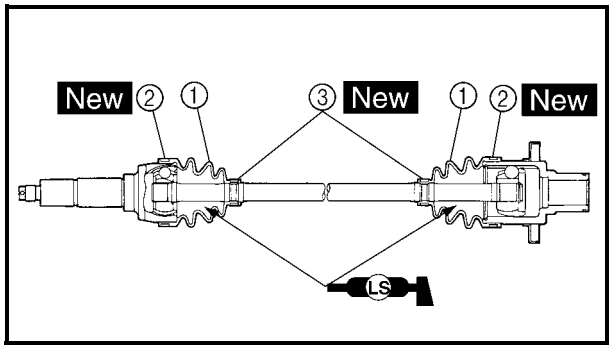

ASSEMBLING THE REAR CONSTANT VELOCITY JOINT

1.Apply:
- Lithium-soap base grease (into the ball joint assembly)

2.Install:
- Dust boots ①
- Boot bands ②, ③ New

****

Installation steps:
- Apply lithium-soap base grease into the dust boots.

	Lithium-soap base grease: **50 g (1.8 oz) per dust boot (rear wheel side)** **60 g (2.3 oz) per dust boot (final gear case side)**

- Install the dust boots.
- Install the dust boot bands.

NOTE:
- The new boot bands may differ from the original ones.
- The dust boots should be fastened with the boot bands ③ at the grooves in the joint shaft.

****

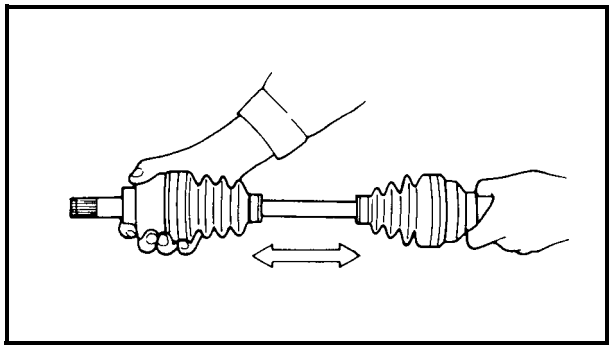

3.Check:
- Free play (thrust movement)
  Excessive play → Replace the joint assembly.

Downloaded from www.Manualslib.com manuals search engine

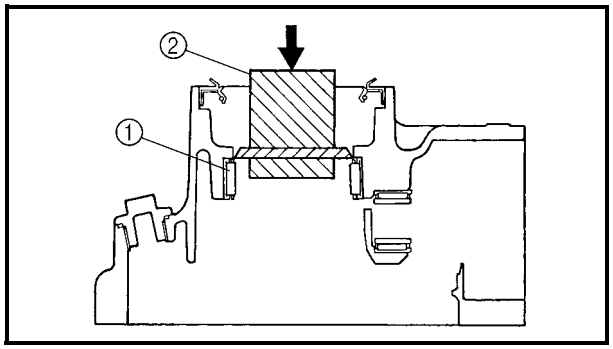

REMOVING AND DISASSEMBLING THE FINAL DRIVE ROLLER BEARING

1.Remove:
- Roller bearing (ring gear) ①
  Use a suitable press tool ② and an appropriate support for the main housing.

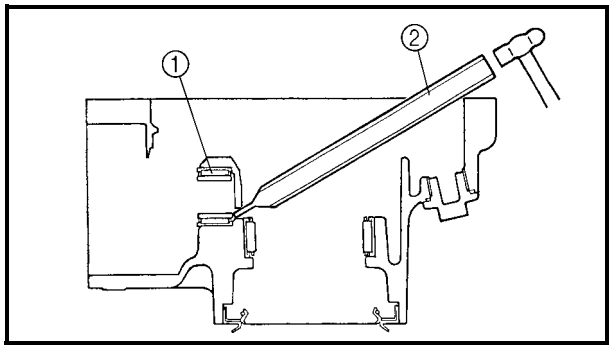

2.Remove:
- Roller bearing (final drive pinion gear) ①

****

Removal steps:
- Heat the main housing only to 150 °C (302 °F).
- Remove the roller bearing outer race with an appropriately shaped punch ②.
- Remove the inner race from the final drive pinion gear.

NOTE:
The removal of the final drive pinion gear roller bearing is difficult and seldom necessary.

****

3.Install:
- Roller bearing (final drive pinion gear) New

****

Installation steps:
- Heat the main housing only to 150 °C (302 °F).
- Install the roller bearing outer race using the proper adapter.
- Install the inner race onto the drive pinion gear.

****

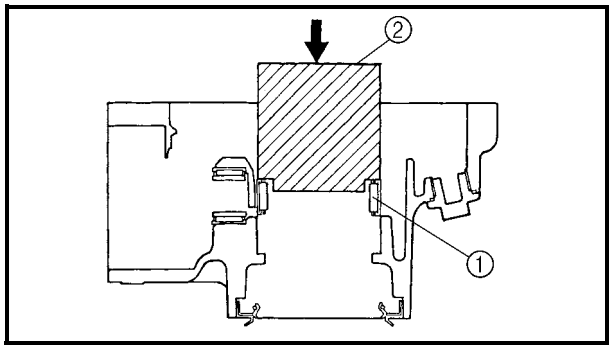

4.Install:
- Roller bearing ①
  Use a suitable press tool ② and a press to install the above components into the main housing.

Downloaded from www.Manualslib.com manuals search engine

POSITIONING THE FINAL DRIVE PINION GEAR AND RING GEAR

When the final drive pinion gear, ring gear, final gear case and/or ring gear bearing housing are replaced, be sure to adjust the positions of the final drive pinion gear and ring gear using the shim(s).

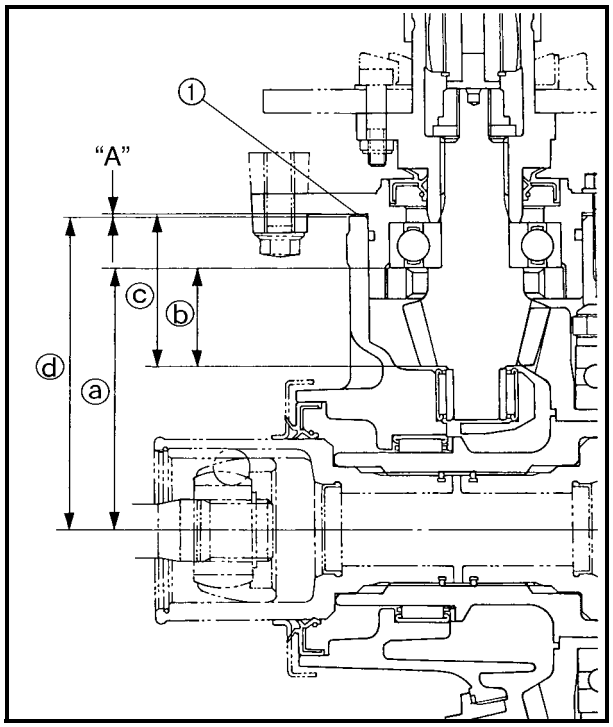

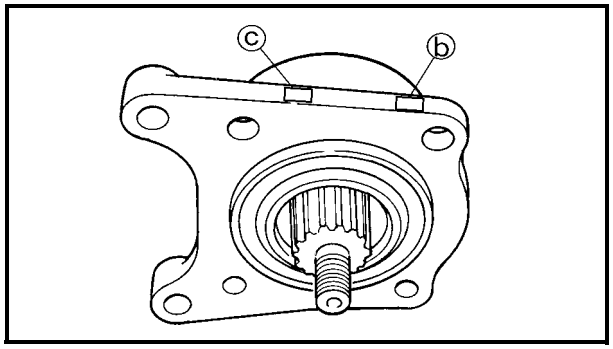

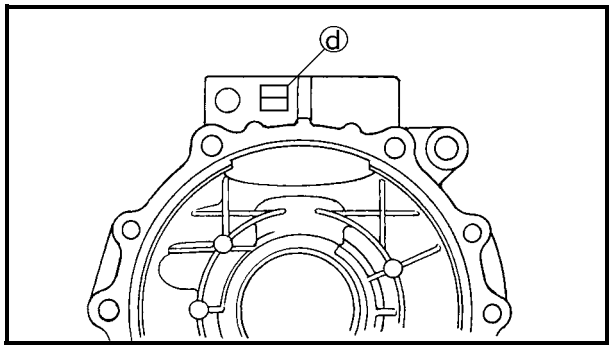

Final drive pinion gear shim selection

1.Select:

- Final drive pinion gear shim(s) ①

****

Selection steps:

- To find the final drive pinion gear shim thickness "A", use the following formula.

Final drive pinion gear shim thickness:
"A" = ⓐ + (ⓒ – ⓑ) – ⓓ

ⓐ = 92.5 mm
ⓑ = a numeral (usually a decimal number) on the pinion gear bearing housing either added to "34"
ⓒ = a numeral (usually a decimal number) on the pinion gear bearing housing either added to "55"
ⓓ = a numeral (usually a decimal number) on the final drive gear case either added to "112"

Example:

1) ⓐ = 92.5
2) If "98" is stamped on the pinion gear bearing housing,
   ⓑ = 34 + 0.98 = 34.98
3) If "48" is stamped on the pinion gear bearing housing,
   ⓒ = 55 + 0.48 = 55.48
4) If "03" is stamped on the final drive gear case,
   ⓓ = 112 + 0.03 = 112.03
5) Therefore, "A" is 0.97.
   "A" = 92.5 + (55.48 – 34.98) – 112.03
   = 0.97

Downloaded from www.Manualslib.com manuals search engine

6) Round off the hundredth digit and select the appropriate shim(s).
In the example above, the calculated number is 0.97. The chart instructs you to round off 7 to 5 at the hundredth place. Thus, the shim thickness is 0.95 mm.

Hundredths	Rounded value
0, 1, 2	0
3, 4, 5, 6, 7	5
8, 9	10

Shims are supplied in the following thicknesses.

Final drive pinion gear shim			
Thickness (mm)	0.15 0.45	0.30 0.50	0.40 0.60

****

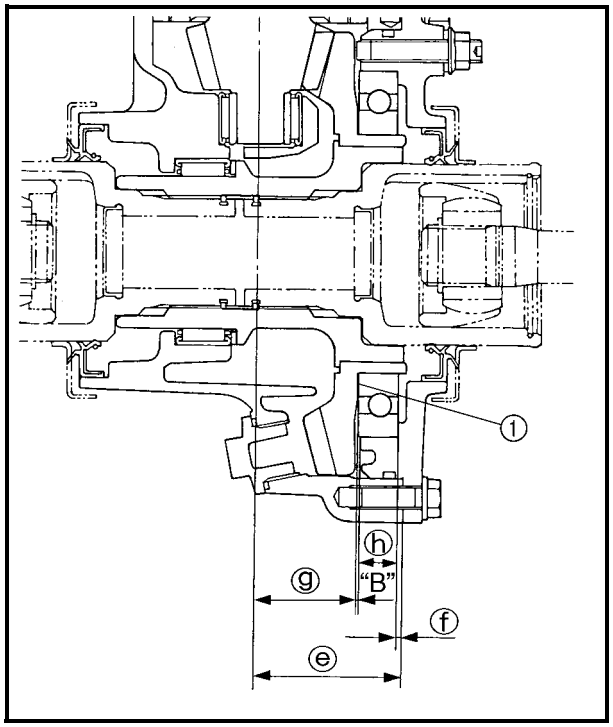

Ring gear shim selection

1.Select:

- Ring gear shim(s) ①

****

Selection steps:

- To find the ring gear shim thickness "B", use the following formula.

Ring gear shim thickness:
"B" = ⓔ – ⓕ – (ⓖ + ⓗ)

ⓔ = a numeral (usually a decimal number) on the final drive gear case either added to "50"
ⓕ = a numeral (usually a decimal number) on the outside of the ring gear bearing housing and added to 1
ⓖ = a numeral (usually a decimal number) on the inside of the ring gear either added to or subtracted from 35.00

Downloaded from www.Manualslib.com manuals search engine

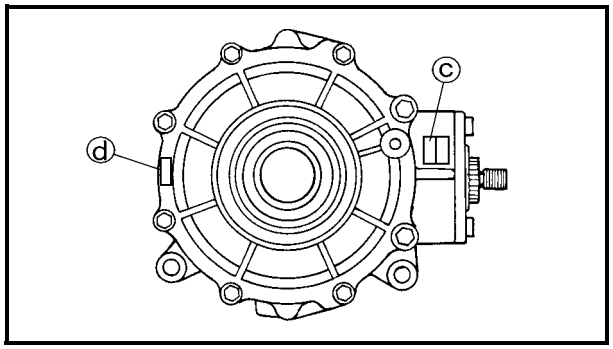

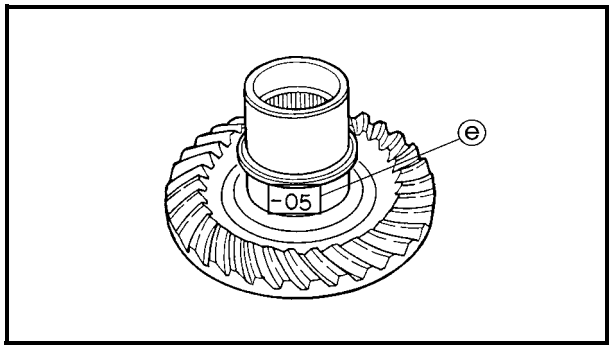

ⓗ =bearing thickness (considered constant)

Bearing thickness ⓗ:
14.00 mm

Example:

1) If “98” is stamped on the final drive gear case,
   ⓔ = 50 + 0.98 = 50.98
2) If “55” is stamped on the ring gear bearing housing,
   ⓕ = 1 + 0.55
   = 1.55
3) If “–05” is stamped on the ring gear,
   ⓖ = 35 – 0.05
   = 34.95
4) ⓗ = 14.00
5) Therefore, shim thickness “B” is 0.48.
   “B”= 50.98 – 1.55 – (34.95 + 14.00)
   = 49.43 – 48.95
   = 0.48
6) Round off the hundredth digit and select the appropriate shim(s).
   In the example above, the calculated number is 0.48. The chart instructs you to round off 8 to 10 at the hundredth place.
   Thus, the shim thickness is 0.50 mm.

Hundredths	Rounded value
0, 1, 2	0
3, 4, 5, 6, 7	5
8, 9	10

Shims are supplied in the following thicknesses.

Ring gear shim

Thickness (mm)	**0.25**	**0.30**	**0.35**
	0.40	**0.45**	**0.50**

****

Downloaded from www.Manualslib.com manuals search engine

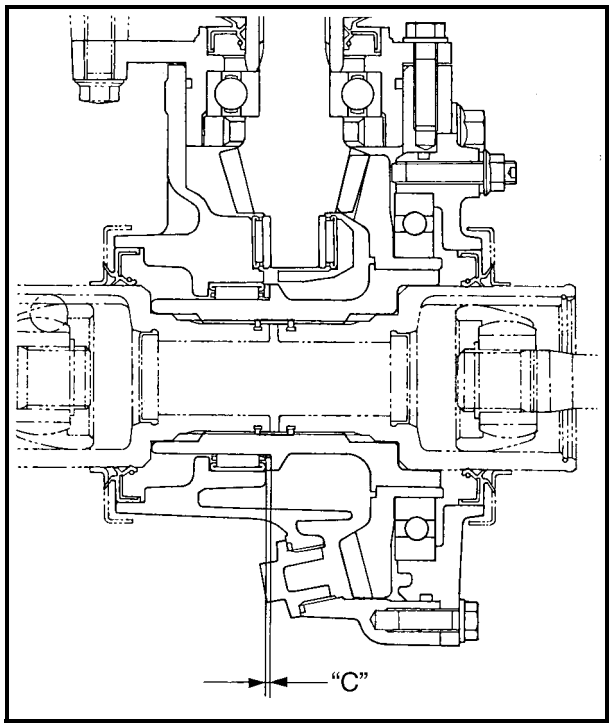

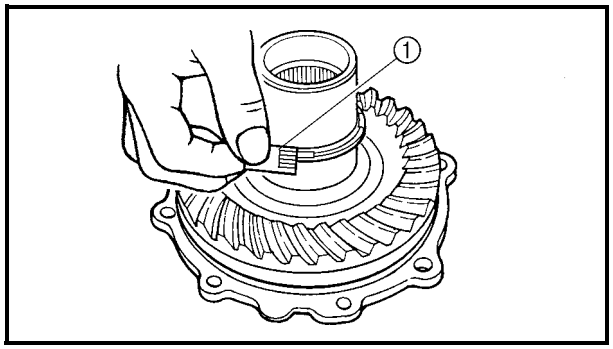

Thrust washer selection

1.Measure/select:

- Ring gear thrust clearance "C"

****

Measurement steps:

- Place four pieces of Plastigauge® between the originally fitted thrust washer and the ring gear.
- Install the ring gear assembly and tighten the bolts to specification.

	M8 Bolts (bearing housing): **23 Nm (2.3 m • kg, 17 ft • lb)** **M10 Bolts (bearing housing):** **40 Nm (4.0 m • kg, 29 ft • lb)**

NOTE:

Do not turn the drive pinion gear and ring gear when measuring the clearance with Plastigauge®.

- Remove the ring gear assembly.
- Measure the thrust clearance. Calculate the width of the flattened Plastigauge® 1.

	Ring gear thrust clearance: **0.1 ~ 0.2 mm (0.004 ~ 0.008 in)**

- If out of specification, select the correct washer.

Selection steps:

- Select a suitable thrust washer using the following chart.

	Thrust washer		
Thickness (mm)	**1.2** **1.5** **1.8** **2.1**	**1.3** **1.6** **1.9**	**1.4** **1.7** **2.0**

- Repeat the measurement steps until the ring gear thrust clearance is within the specified limits.

****

Downloaded from www.Manualslib.com manuals search engine

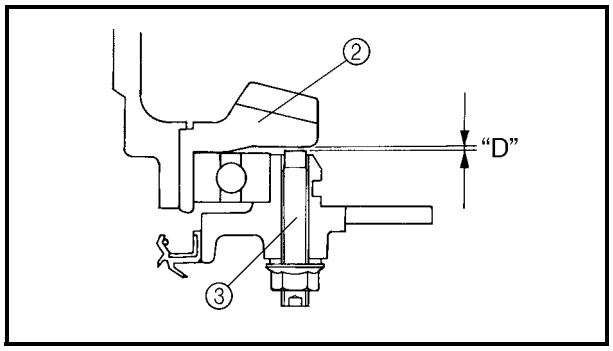

Adjusting the ring gear stopper

1.Measure:

- Ring gear stopper clearance "D"
  Use a feeler gauge ①.
  Out of specification → Adjust.

	Ring gear stopper clearance "D": 0.30 ~ 0.60 mm (0.012 ~ 0.024 in)

② Ring gear
③ Ring gear stopper

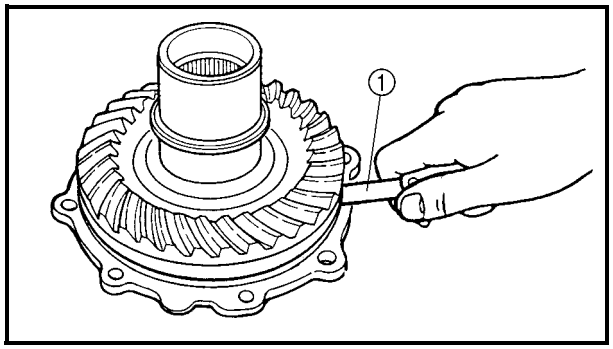

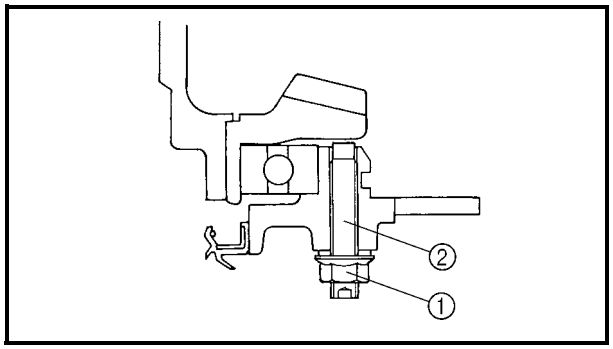

2.Remove:

- Nut ①

3.Loosen:

- Ring gear stopper ②

****

Adjusting steps:

- Turn the ring gear stopper in or out until to the specified clearance.

	Ring gear stopper clearance: 0.3 ~ 0.6 mm (0.012 ~ 0.024 in)

****

4.Install:

- Nut — **16 Nm (1.6 m • kg, 11 ft • lb)**
- Ring gear

NOTE:
Use LOCTITE® on the ring gear stopper.

Downloaded from www.Manualslib.com manuals search engine

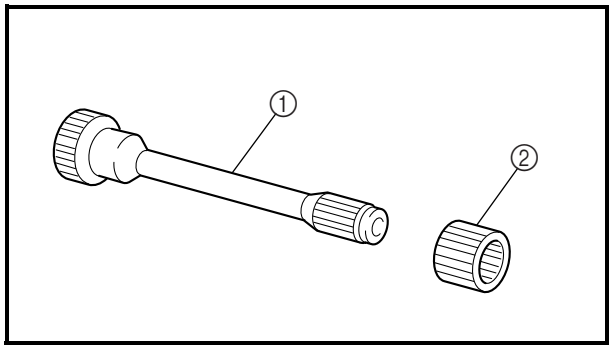

CHECKING THE DRIVE SHAFT

1.Check:
- Drive shaft (splines) ①
- Coupling gear (splines) ②
  Wear/damage → Replace.

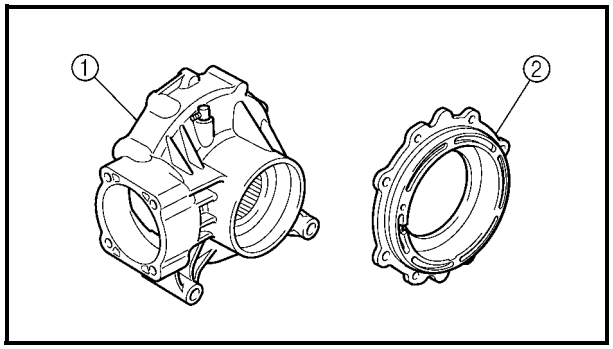

CHECKING THE FINAL DRIVE GEAR

1.Check:
- Final drive gear case ①
- Ring gear bearing housing ②
  Cracks/damage → Replace.

NOTE:
When the final drive gear case and/or the ring gear bearing housing are replaced, be sure to adjust the shim of the final drive pinion gear and/or ring gear.

2.Check:
- Gear teeth
  Pitting/galling/wear → Replace the drive pinion gear and ring gear as a set.
- Oil seals
- O-rings
  Damage → Replace.

3.Check:
- Bearings
  Damage → Replace.

NOTE:
- Reusing roller bearings is acceptable, but Yamaha recommends installing new ones. Do not reuse the oil seal.
- When the final drive pinion gear and/or ring gear are replaced, be sure to adjust the shim of the final drive pinion gear and/or ring gear.

Downloaded from www.Manualslib.com manuals search engine

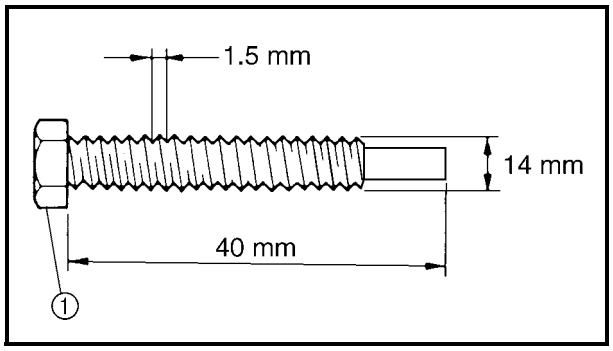

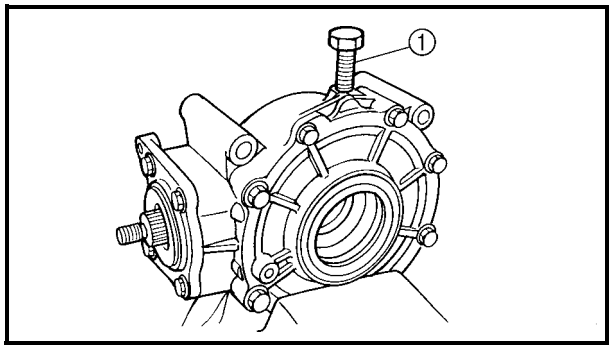

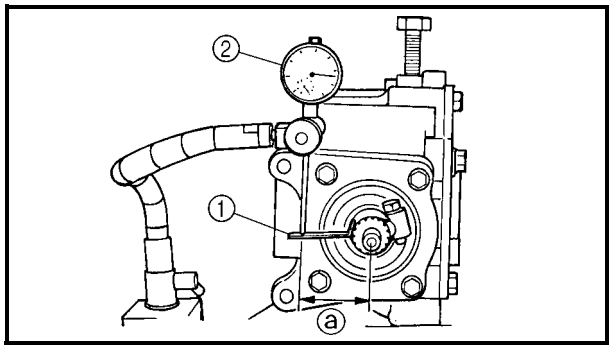

MEASUREMENT AND ADJUSTING THE FINAL GEAR LASH

Final gear lash measurement

1. Secure the gear case in a vise or another supporting device.
2. Remove:
   - Drain plug
   - Gasket
3. Install:
   - A bolt of the specified size ①
     (into the drain plug hole)

CAUTION:

Finger tighten the bolt until it holds the ring gear. Otherwise, the ring gear will be damaged.

4. Attach:
   - Gear lash measurement tool ①
   - Dial gauge ②

	Gear lash measurement tool: P/N. YM-01231, 90890-01231

ⓐ Measuring point is 22 mm (0.87 in)

5. Measure:
   - Gear lash
     Gently rotate the gear coupling from engagement to engagement.

	Final gear lash: 0.1 ~ 0.2 mm (0.004 ~ 0.008 in)

NOTE:

Measure the gear lash at four positions. Rotate the shaft 90° each time.

Downloaded from www.Manualslib.com manuals search engine

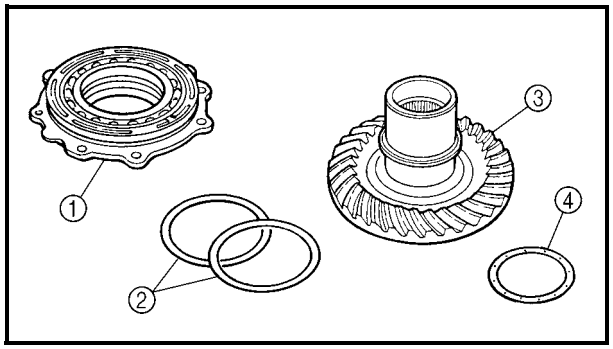

Final gear lash adjustment

1.Remove:
- Bearing housing ①
- Ring gear shim(s) ②
- Ring gear ③
- Thrust washer ④

2.Adjust:
- Gear lash

****

Adjustment steps:

- Select a suitable shim(s) and thrust washer(s) using the following chart.

Too little gear lash	**Reduce shim thickness.**
Too large gear lash	**Increase shim thickness.**

- If increased by more than 0.2 mm (0.008 in): Reduce the thrust washer thickness by 0.2 mm (0.008 in) for every 0.2 mm of ring gear shim increase.
- If reduced by more than 0.2 mm (0.008 in): Increase the thrust washer thickness by 0.2 mm (0.008 in) for every 0.2 mm that the ring gear shim is decreased.

Ring gear shim			
Thickness (mm)	**0.25** **0.40**	**0.30** **0.45**	**0.35** **0.50**

Thrust washer			
Thickness (mm)	**1.2** **1.5** **1.8** **2.1**	**1.3** **1.6** **1.9**	**1.4** **1.7** **2.0**

****

Downloaded from www.Manualslib.com manuals search engine

ASSEMBLING THE FINAL DRIVE GEAR

1.Adjust:
- Final gear lash
  Refer to “MEASUREMENT AND ADJUSTING THE FINAL GEAR LASH”.

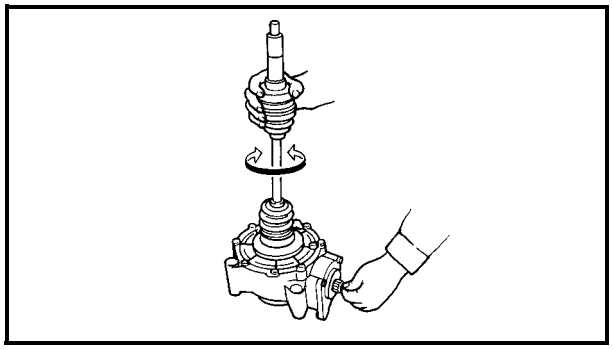

2.Check:
- Final drive gear operation
  Unsmooth operation → Replace the final drive gear assembly.
  Insert the double off-set joint into the final drive gear, and turn the gear back and forth.

INSTALLING THE FINAL DRIVE GEAR

1.Lubricate:
- Drive shaft
- Coupling gear
- O-ring
- Oil seal
- Bearing

	Recommended lubricant: Yamaha Grizzly grease

2.Install:
- Drive shaft
- Coupling gear

3.Install:
- Final drive gear
- Nuts **55 Nm (5.5 m • kg, 40 ft • lb)**

Downloaded from www.Manualslib.com manuals search engine

CHASSIS

FRONT WHEELS AND BRAKE DISCS

FRONT WHEELS

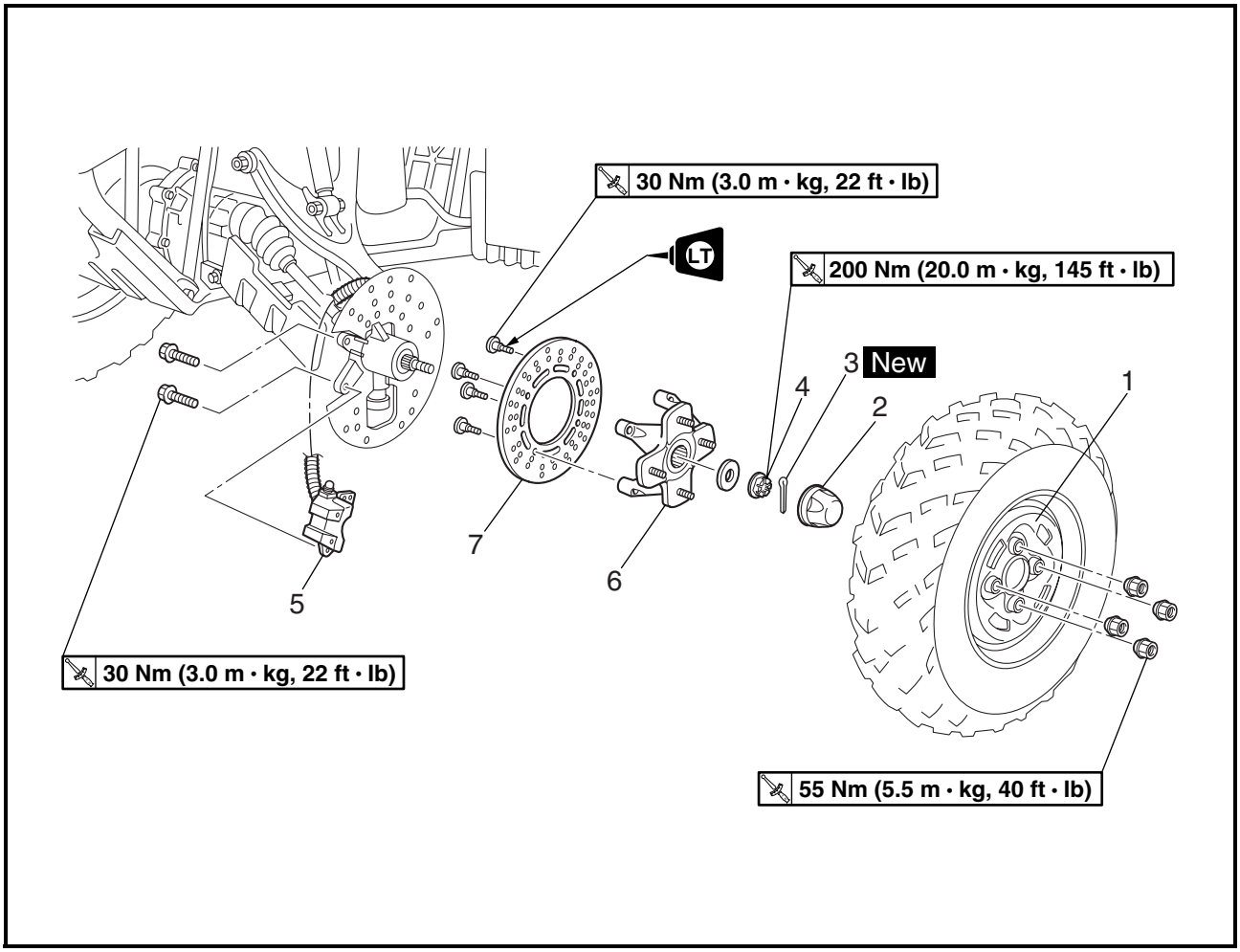

Order	Job name/Part name	Q'ty	Remarks
	Removing the front wheel		Remove the parts in the order below. Place the machine on a level surface. **WARNING** **Securely support the machine so there is no danger of it falling over.**
1	Front wheel	1	Refer to "INSTALLING THE FRONT WHEEL".
2	Wheel cap	1	Refer to "INSTALLING THE FRONT-WHEEL HUB".
3	Cotter pin	1	
4	Axle nut	1	

8

Downloaded from www.Manualslib.com manuals search engine

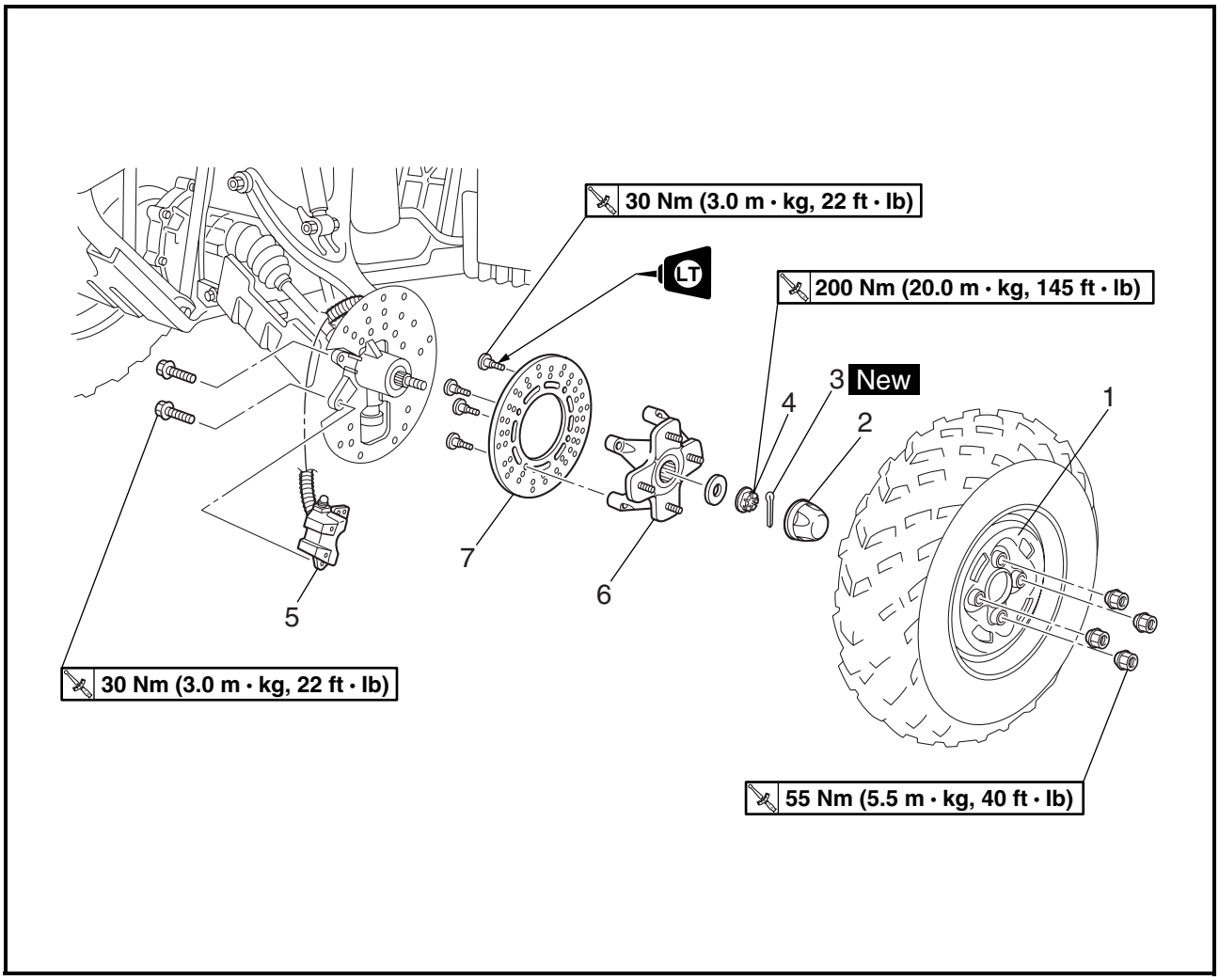

Order	Job name/Part name	Q'ty	Remarks
5	Brake caliper assembly	1	**NOTE:** Do not squeeze the brake lever when the brake caliper is off of the brake disc as the brake pads will be forced shut.
6	Front wheel hub	1	
7	Brake disc	1	For installation, reverse the removal procedure.

Downloaded from www.Manualslib.com manuals search engine

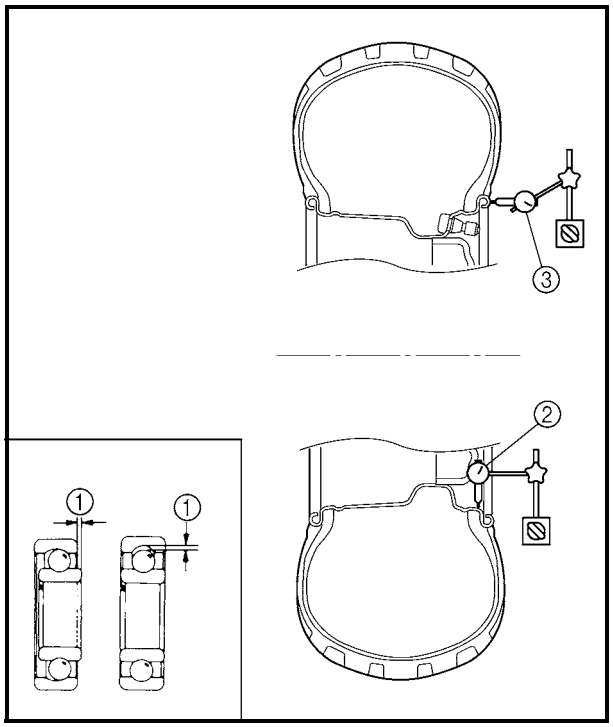

CHECKING THE FRONT WHEEL

1.Check:
- Wheel

2.Measure:
- Wheel runout
  Over the specified limit → Replace the wheel or check the wheel bearing play ①.

Wheel runout limit:
Radial ②: 2.0 mm (0.08 in)
Lateral ③: 2.0 mm (0.08 in)

3.Check:
- Wheel balance
  Out of balance → Adjust.

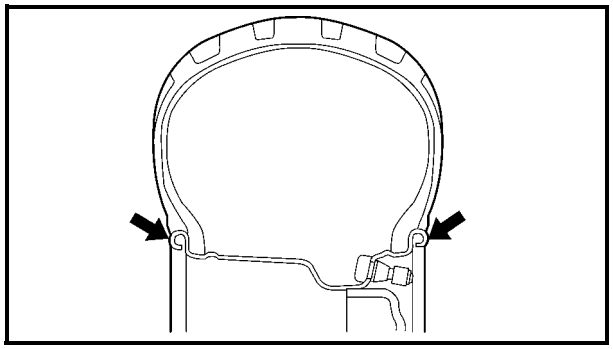

⚠ WARNING

After replacing the tire, ride conservatively to allow the tire to be properly seated in the rim. Failure to do so may cause an accident resulting in machine damage and possible operator injury.

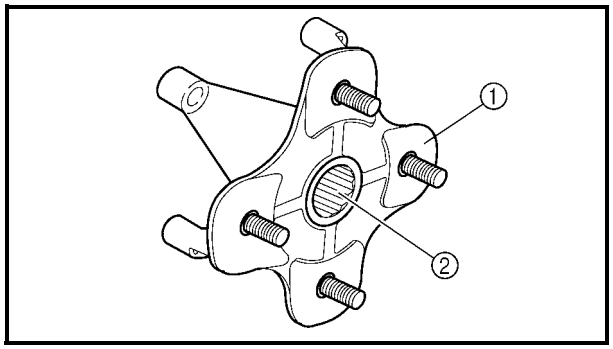

CHECKING THE FRONT WHEEL HUB

1.Check:
- Wheel hub ①
  Cracks/damage → Replace.
- Splines (wheel hub) ②
  Wear/damage → Replace.

Downloaded from www.Manualslib.com manuals search engine

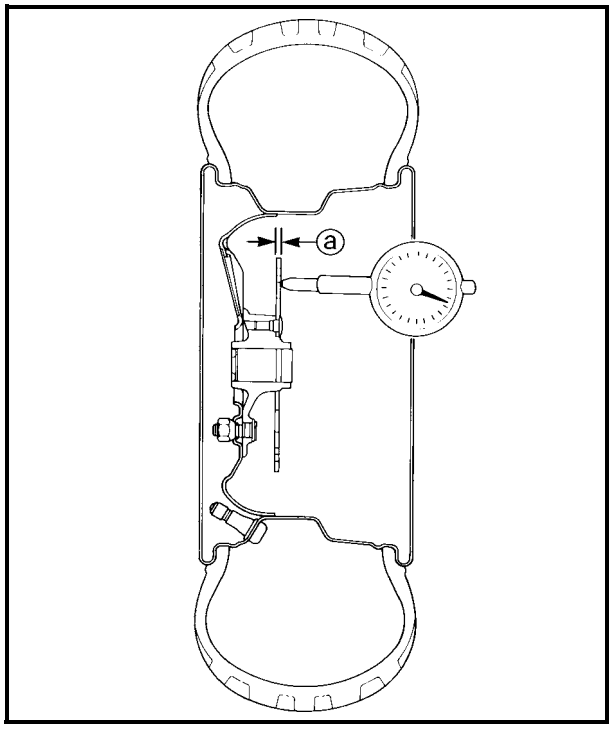

CHECKING THE FRONT BRAKE DISC

1.Check:
- Brake disc
  Galling/damage → Replace.

2.Measure:
- Brake disc deflection
  Out of specification → Check the wheel runout.
  If wheel runout is within the limits, replace the brake disc.

	Brake disc maximum deflection: 0.15 mm (0.006 in)

- Brake disc thickness ⓐ
  Out of specification → Replace.

	Brake disc minimum thickness: 3 mm (0.12 in)

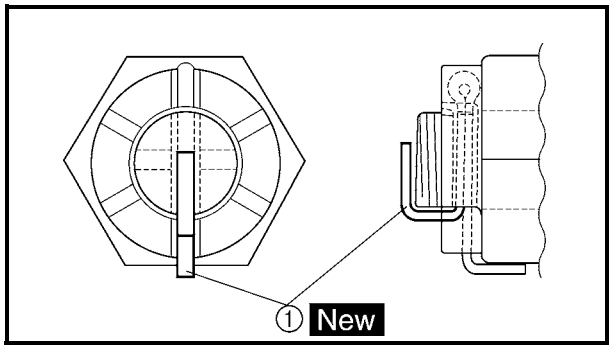

INSTALLING THE FRONT WHEEL HUB

1.Install:
- Axle nut **200 Nm (20.0 m • kg, 145 ft • lb)**
- Cotter pin ① New

NOTE:
- Do not apply oil to the seat of the nut.
- Do not loosen the axle nut after torquing it. If the axle nut groove is not aligned with the cotter pin hole, align the groove with the hole by tightening the axle nut.

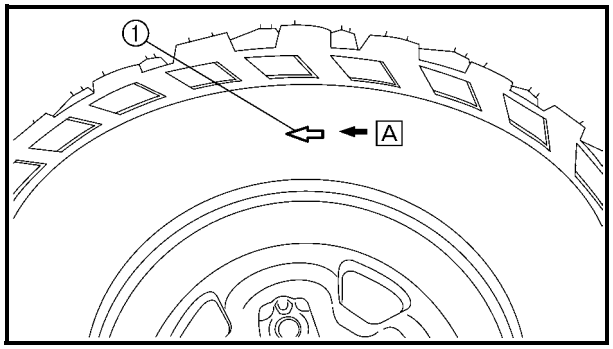

INSTALLING THE FRONT WHEEL

1.Install:
- Wheel

NOTE:
The arrow mark ① on the tire must point in the direction of rotation A of the wheel.

Downloaded from www.Manualslib.com manuals search engine

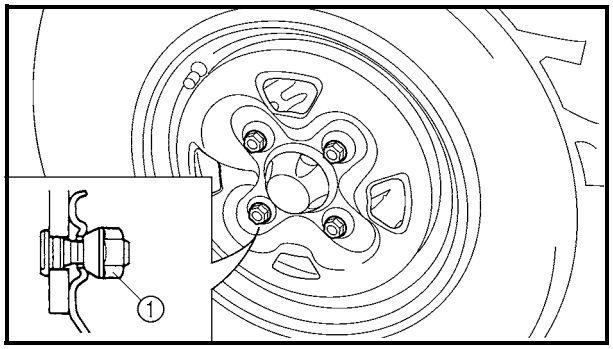

2.Tighten:
- Nuts (wheel) ①

⚠ WARNING

Tapered wheel nuts ① are used for both the front and rear wheels. Install each nut with its tapered side towards the wheel.

Downloaded from www.Manualslib.com manuals search engine

REAR WHEELS AND BRAKE DISC

REAR WHEELS

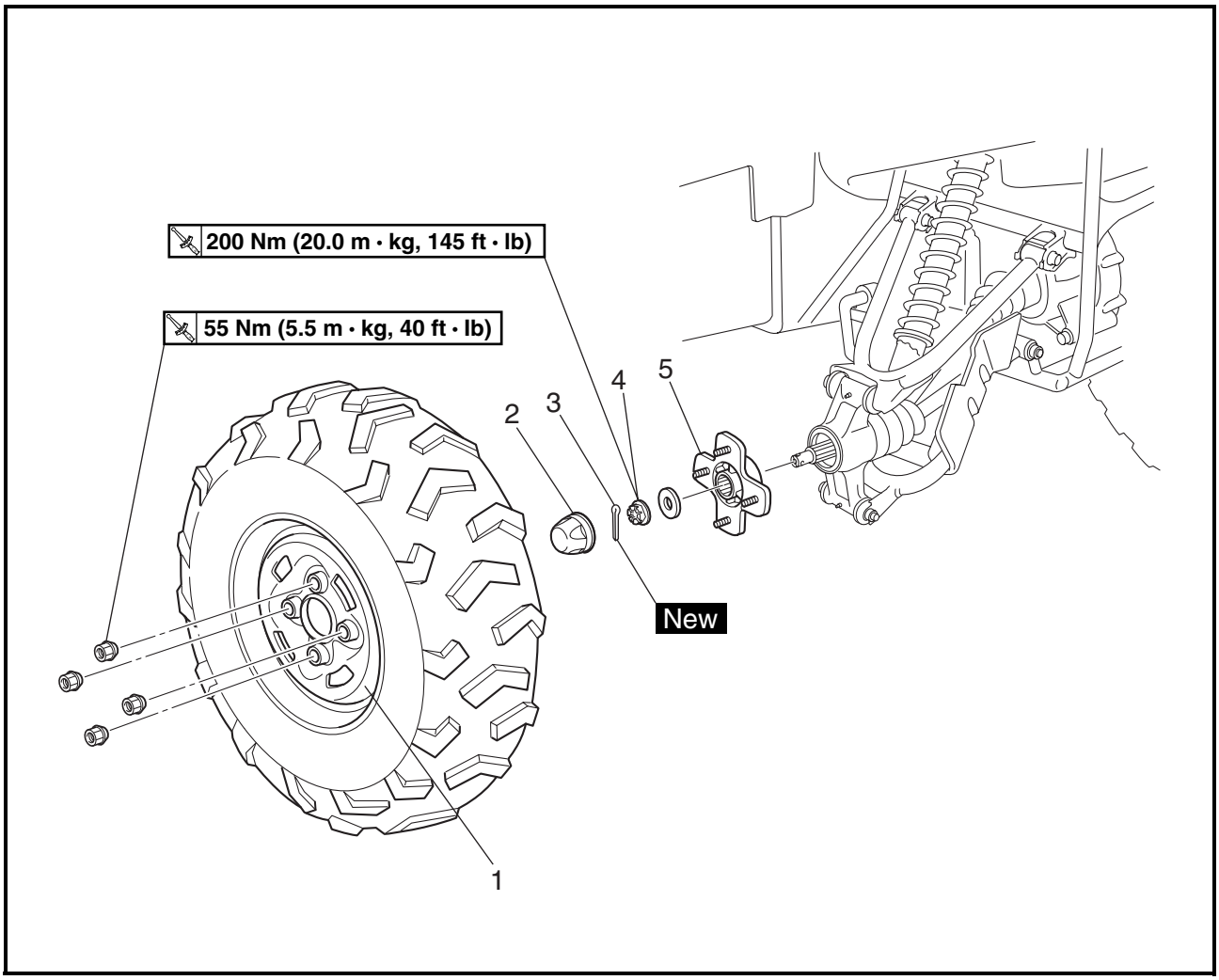

Order	Job name/Part name	Q'ty	Remarks
	Removing the rear wheel		Remove the parts in the order below. Place the machine on a level surface. **WARNING** **Securely support the machine so there is no danger of it falling over.**
1	Rear wheel	1	Refer to "INSTALLING THE REAR WHEEL".
2	Wheel cap	1	Refer to "INSTALLING THE REAR WHEEL HUB".
3	Cotter pin	1	
4	Axle nut	1	
5	Rear wheel hub	1	
			For installation, reverse the removal procedure.

Downloaded from www.Manualslib.com manuals search engine

REAR BRAKE DISC

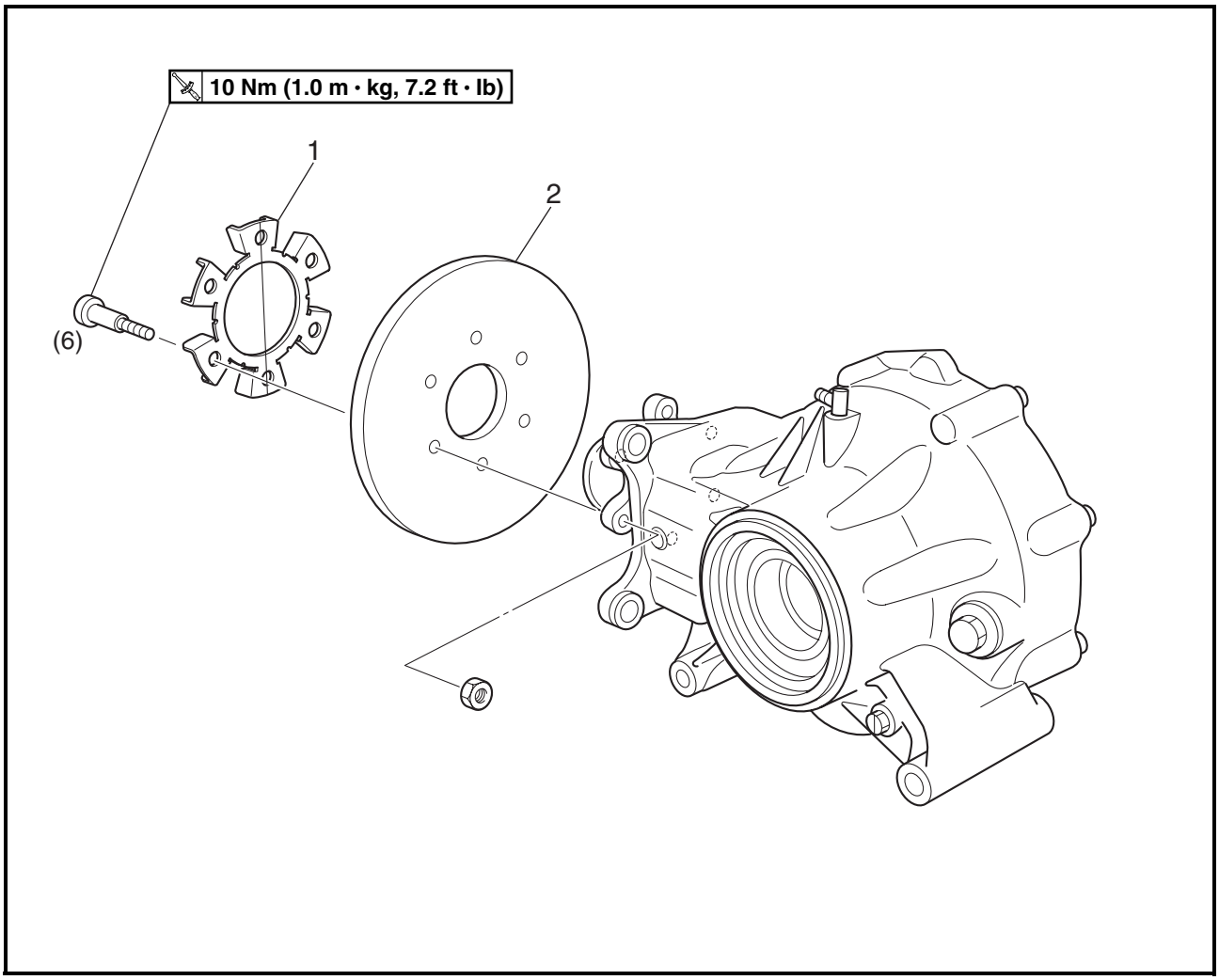

Order	Job name/Part name	Q'ty	Remarks
	Disassembling the rear brake disc		Remove the parts in the order below.
	Brake caliper assembly		Refer to "REAR BRAKE CALIPER".
	Final drive gear		Refer to "FINAL DRIVE GEAR AND DRIVE SHAFT" in CHAPTER 7.
1	Rear brake disc plate	1	
2	Rear brake disc	1	
			For assembly, reverse the disassembly produce.

Downloaded from www.Manualslib.com manuals search engine

CHECKING THE REAR WHEEL

1.Check:
- Wheel
  Refer to “CHECKING THE FRONT WHEEL”.

2.Measure:
- Wheel runout
  Refer to “CHECKING THE FRONT WHEEL”.
  Over the specified limit → Replace.

Wheel runout limit:
Radial: 2.0 mm (0.08 in)
Lateral: 2.0 mm (0.08 in)

3.Check:
- Wheel balance
  Refer to “CHECKING THE FRONT WHEEL”.
  Out of balance → Adjust.

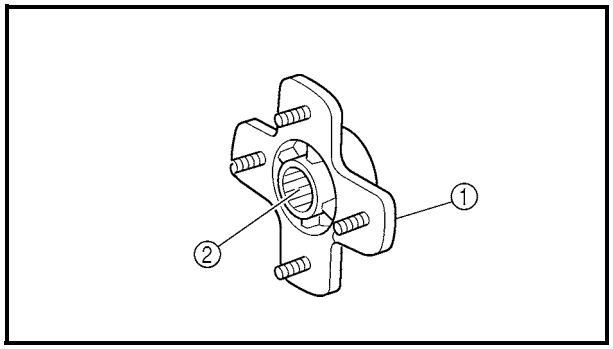

CHECKING THE REAR WHEEL HUB

1.Check:
- Wheel hub ①
  Cracks/damage → Replace.
- Splines (wheel hub) ②
  Wear/damage → Replace.

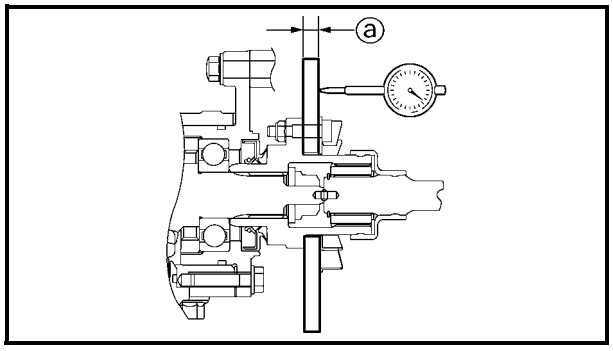

CHECKING THE REAR BRAKE DISC

1.Check:
- Brake disc
  Galling/damage → Replace.

2.Measure:
- Brake disc deflection
  Out of specification → Replace.

Brake disc maximum deflection:
0.1 mm (0.004 in)

- Brake disc thickness ⓐ
  Out of specification → Replace.

Brake disc minimum thickness:
8 mm (0.31 in)

Downloaded from www.Manualslib.com manuals search engine

INSTALLING THE REAR WHEEL HUB

1.Install:
- Cotter pin
  Refer to “INSTALLING THE FRONT WHEEL HUB”.

2.Adjust:
- Rear brake lever and pedal free play
  Refer to “ADJUSTING THE REAR BRAKE LEVER AND PEDAL” in CHAPTER 3.

INSTALLING THE REAR WHEEL

1.Install:
- Wheel
  Refer to “INSTALLING THE FRONT WHEEL”.

2.Tighten:
- Nuts (wheel)
  Refer to “INSTALLING THE FRONT WHEEL”.

Downloaded from www.Manualslib.com manuals search engine

FRONT AND REAR BRAKES

FRONT BRAKE PADS

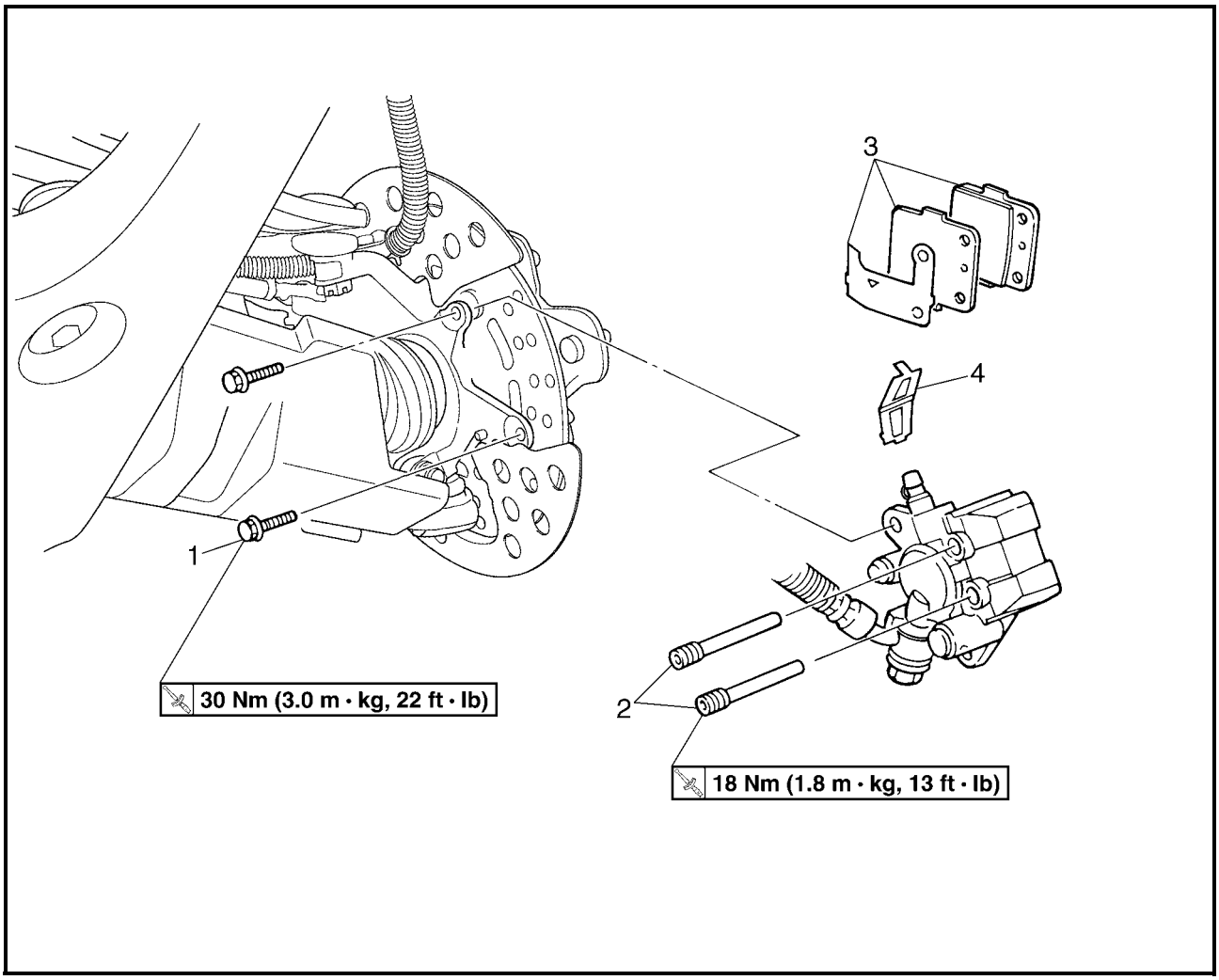

Order	Job name/Part name	Q'ty	Remarks
	Removing the front brake pads		Remove the parts in the order below.
	Front wheel		Refer to "FRONT WHEELS".
1	Brake caliper mounting bolt	2	Refer to "REPLACING THE FRONT BRAKE PAD".
2	Brake pad holding bolt	2	
3	Brake pad/pad shim	2/1	
4	Pad spring	1	
			For installation, reverse the removal procedure.

Downloaded from www.Manualslib.com manuals search engine

REAR BRAKE PADS

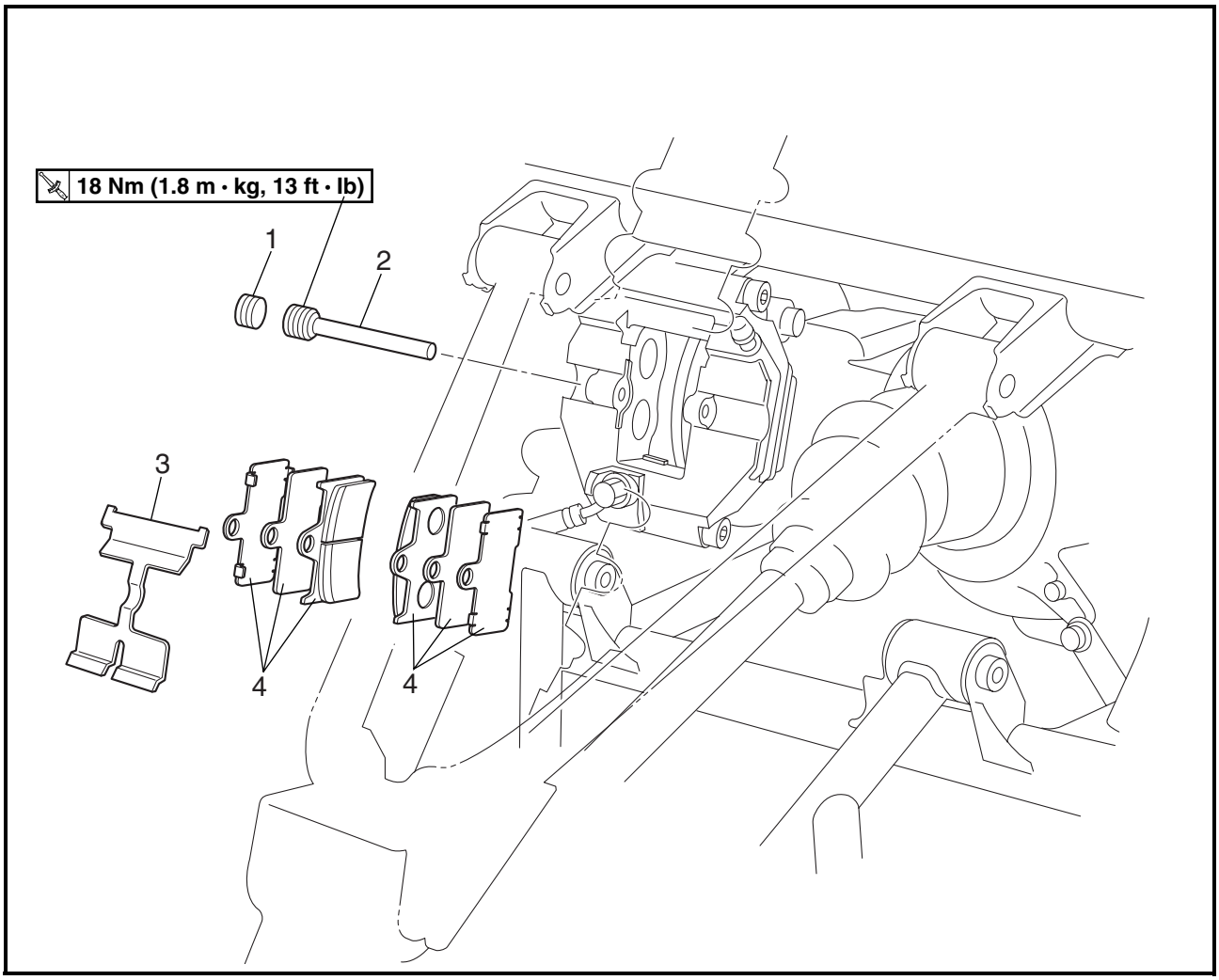

Order	Job name/Part name	Q'ty	Remarks
	Removing the rear brake pads		Remove the parts in the order below.
	Rear wheel (left)		Refer to "REAR WHEELS AND BRAKE DISC".
1	Brake pad holding bolt plug	1	
2	Brake pad holding bolt	1	Refer to "REPLACING THE REAR BRAKE PAD".
3	Pad spring	1	
4	Brake pad/insulator /pad shim	2/2/2	
			For installation, reverse the removal procedure.

Downloaded from www.Manualslib.com manuals search engine

CAUTION:

Disc brake components rarely require disassembly. DO NOT:

- **disassemble components unless absolutely necessary;**
- **use solvents on internal brake components;**
- **use spent brake fluid for cleaning; (use only clean brake fluid)**
- **allow brake fluid to come in contact with the eyes, as this may cause eye injury;**
- **splash brake fluid onto painted surfaces or plastic parts, as this may cause damage;**
- **disconnect any hydraulic connection, as this would require the entire brake system to be disassembled, drained, cleaned, properly filled and bled after reassembly.**

REPLACING THE FRONT BRAKE PAD

NOTE:

It is not necessary to disassemble the brake caliper and brake hose to replace the brake pads.

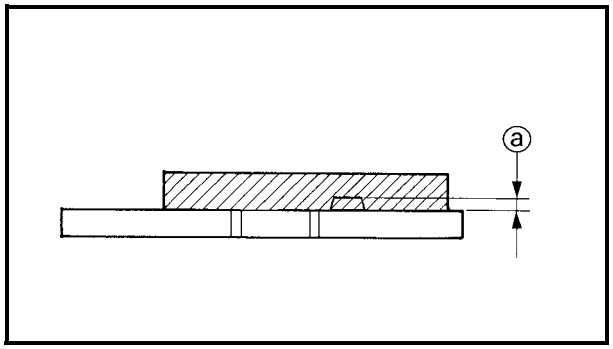

1.Measure:

- Brake pad wear limit ⓐ
  Out of specification → Replace the brake pad as a set.

	Brake pad wear limit: **1 mm (0.04 in)**

2.Install:

- Brake pads
- Brake pad spring

NOTE:

Always install new brake pads, brake pad shim and brake pad spring as a set.

Downloaded from www.Manualslib.com manuals search engine

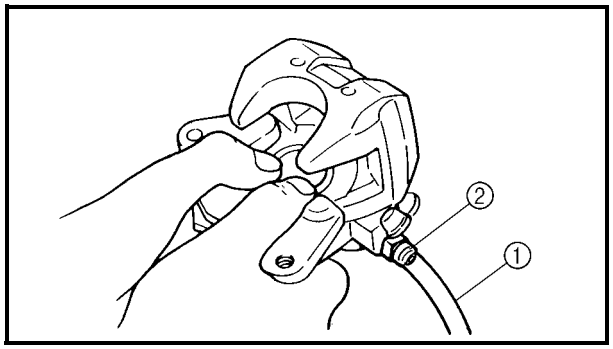

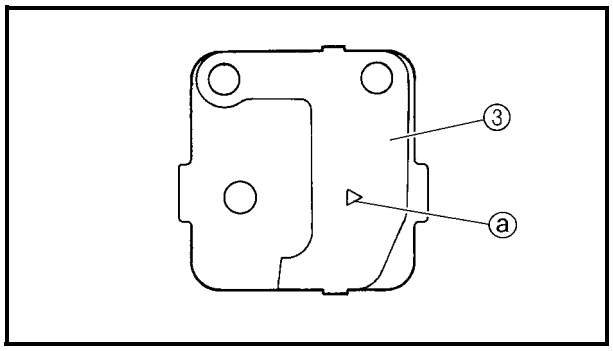

****

Installation steps:

- Connect a suitable hose ① tightly to the brake caliper bleed screw ②. Put the other end of this hose into an open container.
- Loosen the brake caliper bleed screw and, using a finger, push the caliper piston into the brake caliper.
- Tighten the brake caliper bleed screw.

	Brake caliper bleed screw: **6 Nm (0.6 m • kg, 4.3 ft • lb)**

- Install new brake pads, new pad shims ③ and a new brake pad spring.
- Install the retaining bolts and brake caliper.

NOTE:

The arrow mark ⓐ on the pad shim must point in the direction of the disc rotation.

	Brake pad holding bolt: **18 Nm (1.8 m • kg, 13 ft • lb)** **Brake caliper mounting bolt:** **30 Nm (3.0 m • kg, 22 ft • lb)**

****

3.Check:

- Brake fluid level
  Refer to “CHECKING THE BRAKE FLUID LEVEL” in CHAPTER 3.

4.Check:

- Brake lever operation
  Soft or spongy feeling → Bleed the front brake system.
  Refer to “BLEEDING THE HYDRAULIC BRAKE SYSTEM” in CHAPTER 3.

Downloaded from www.Manualslib.com manuals search engine

REPLACING THE REAR BRAKE PAD

NOTE:
It is not necessary to disassemble the brake caliper and brake hose to replace the brake pads.

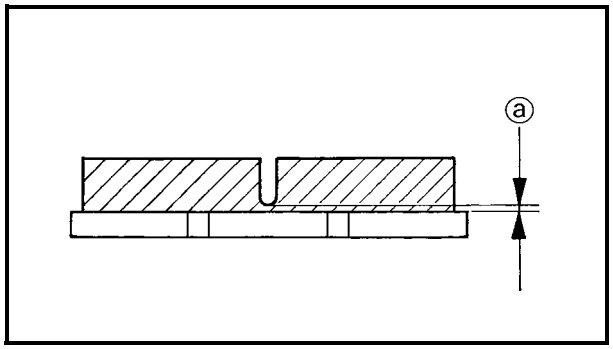

1.Measure:
- Brake pad wear limit ⓐ
  Out of specification → Replace the brake pad as a set.

Brake pad wear limit:
1 mm (0.04 in)

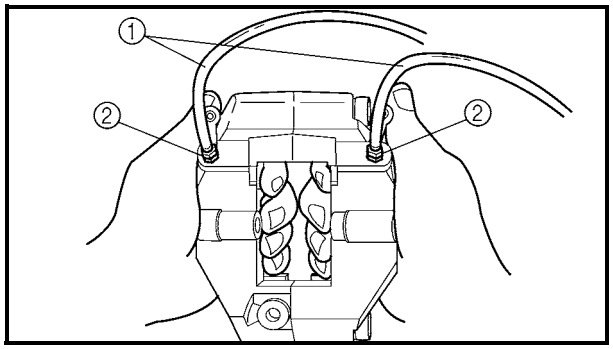

2.Install:
- Brake pads
- Brake pad spring

NOTE:
Always install new brake pads, brake pad shims, insulator and brake pad spring as a set.

****

Installation steps:
- Connect a suitable hose ① tightly to the brake caliper bleed screw ②. Put the other end of this hose into an open container.
- Loosen the brake caliper bleed screw and, using a finger, push the caliper piston into the brake caliper.
- Tighten the brake caliper bleed screw.

Brake caliper bleed screw:
6 Nm (0.6 m • kg, 4.3 ft • lb)

- Install new brake pads, new insulator, new pad shims and a new brake pad spring.
- Install the retaining bolts and brake caliper.

Brake pad holding bolt:
18 Nm (1.8 m • kg, 13 ft • lb)
Brake caliper mounting bolt:
40 Nm (4.0 m • kg, 29 ft • lb)

****

Downloaded from www.Manualslib.com manuals search engine

3.Check:
- Brake fluid level
  Refer to “CHECKING THE BRAKE FLUID LEVEL INSPECTION” in CHAPTER 3.

4.Check:
- Brake lever or brake pedal operation
  Soft or spongy feeling → Bleed the rear brake system.
  Refer to “BLEEDING THE HYDRAULIC BRAKE SYSTEM” in CHAPTER 3.

Downloaded from www.Manualslib.com manuals search engine

FRONT BRAKE MASTER CYLINDER

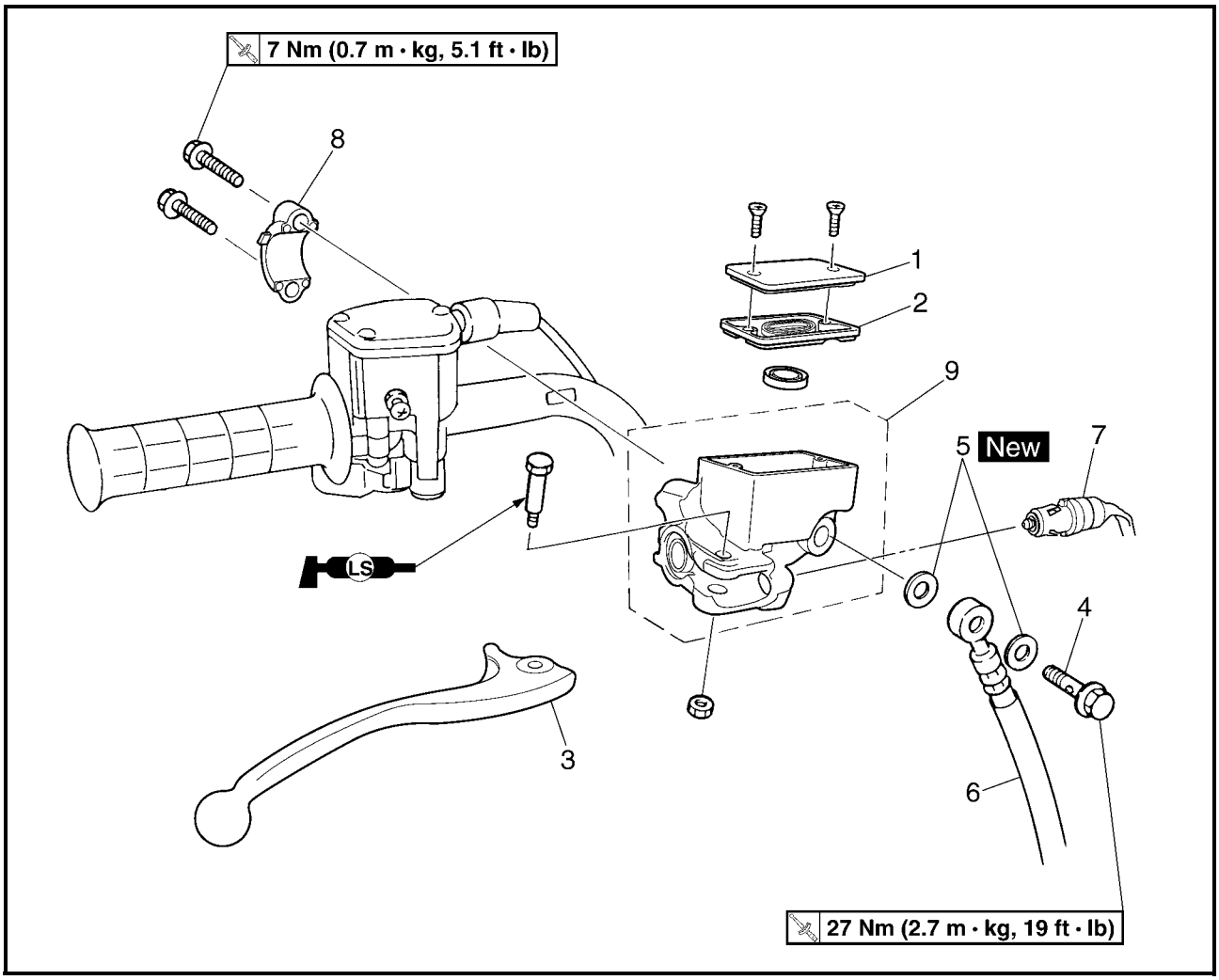

Order	Job name/Part name	Q'ty	Remarks
	Removing the front brake master cylinder		Remove the parts in the order below.
	Brake fluid		Drain.
	On command four-wheel drive switch		Refer to "HANDLEBAR".
1	Brake fluid reservoir cap	1	
2	Brake fluid reservoir diaphragm	1	
3	Brake lever	1	
4	Union bolt	1	
5	Copper washer	2	
6	Brake hose	1	Refer to "INSTALLING THE FRONT BRAKE MASTER CYLINDER".
7	Front brake switch	1	
8	Brake master cylinder bracket	1	
9	Brake master cylinder	1	
			For installation, reverse the removal procedure.

Downloaded from www.Manualslib.com manuals search engine

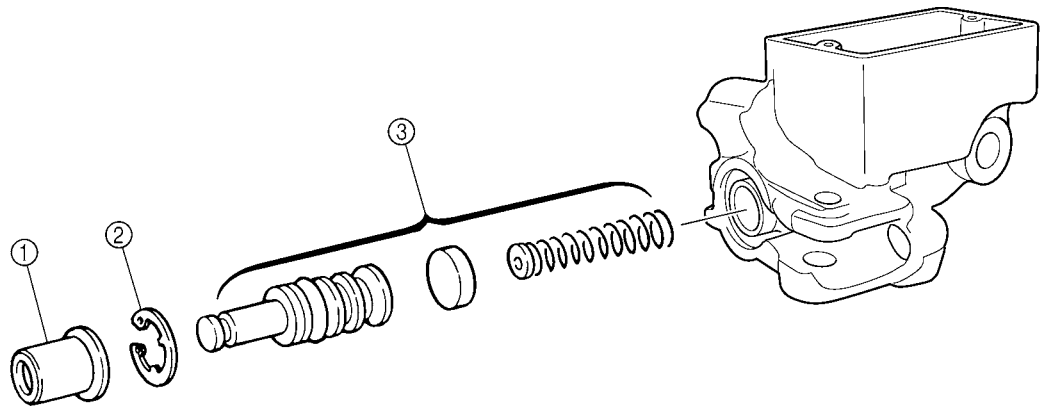

Order	Job name/Part name	Q'ty	Remarks
	Disassembling the front brake master cylinder		Remove the parts in the order below.
①	Dust boot	1	Refer to "ADJUSTING THE FRONT BRAKE MASTER CYLINDER".
②	Circlip	1	
③	Brake master cylinder kit	1	
			For assembly, reverse the disassembly procedure.

Downloaded from www.Manualslib.com manuals search engine

REAR BRAKE MASTER CYLINDER

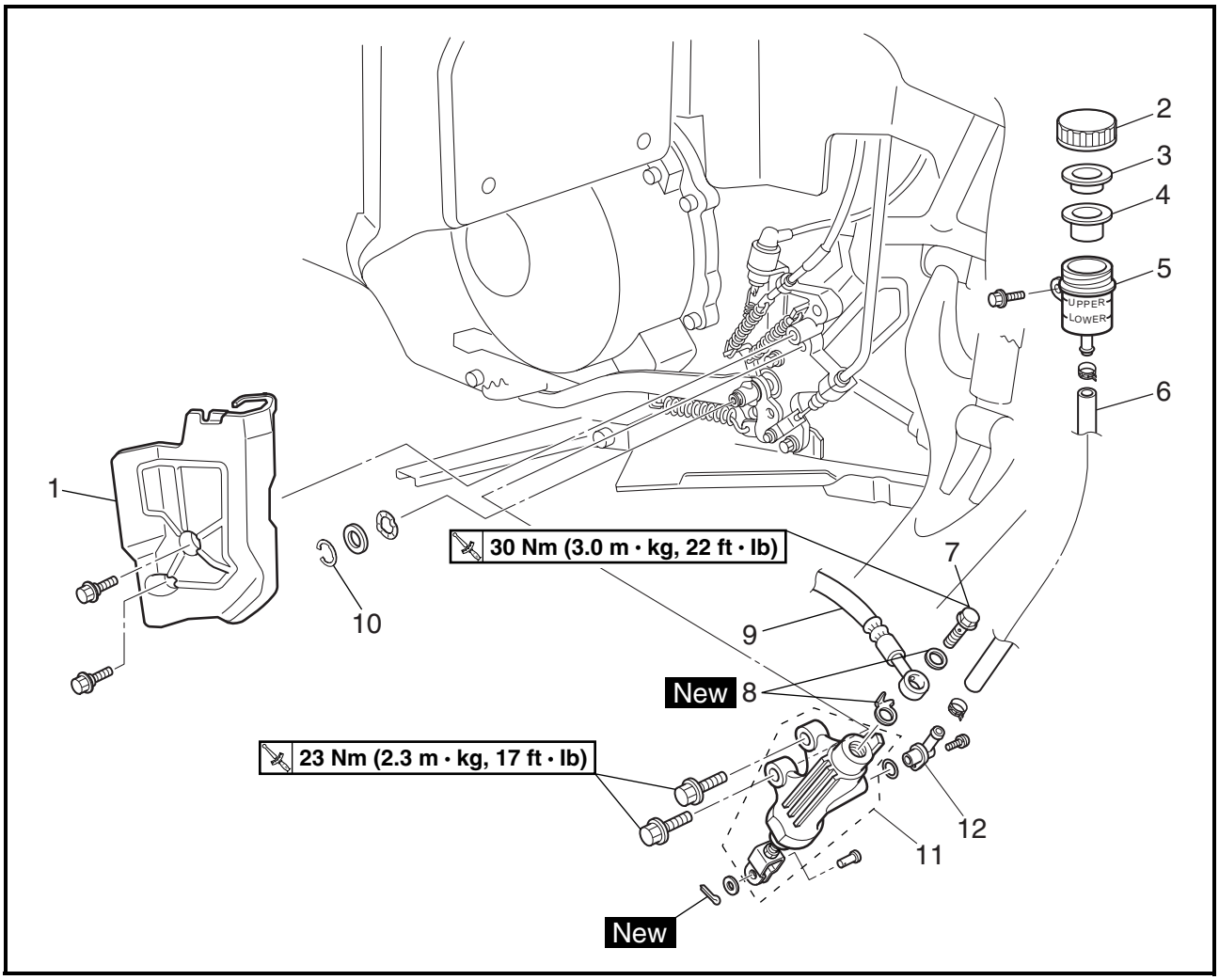

Order	Job name/Part name	Q'ty	Remarks
	Removing the rear brake master cylinder		Remove the parts in the order below.
	Right footrest board		Refer to "FOOTREST BOARDS" in CHAPTER 3.
	Brake fluid		Drain.
1	Brake master cylinder cover	1	
2	Brake fluid reservoir cap	1	
3	Brake fluid reservoir diaphragm holder	1	
4	Brake fluid reservoir diaphragm	1	
5	Brake fluid reservoir	1	
6	Brake fluid reservoir hose	1	

Downloaded from www.Manualslib.com manuals search engine

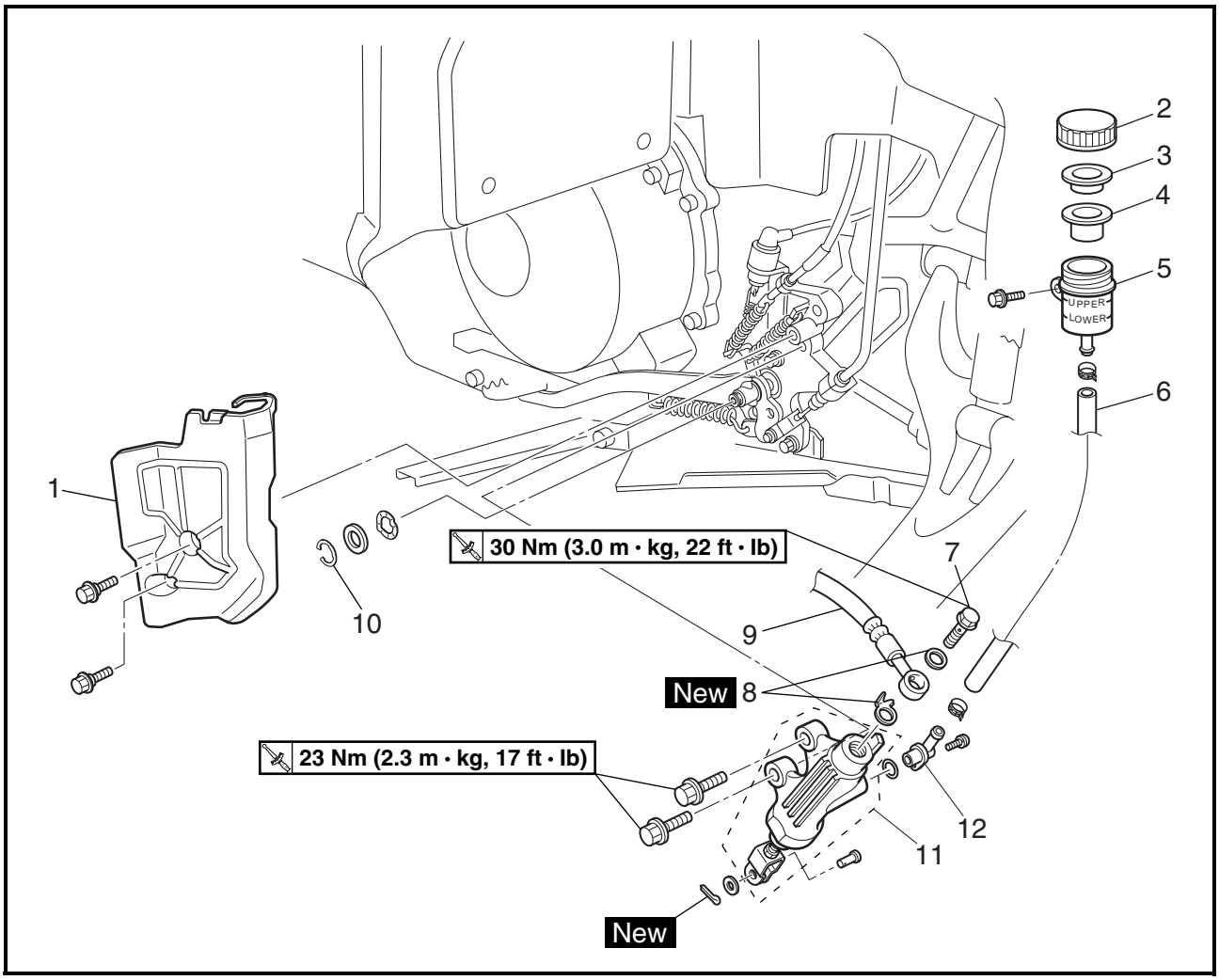

Order	Job name/Part name	Q'ty	Remarks
7	Union bolt	1	Refer to "INSTALLING THE REAR BRAKE MASTER CYLINDER".
8	Copper washer	2	
9	Brake hose	1	
10	Circlip	1	
11	Brake master cylinder	1	
12	Hose joint 1	1	
			For installation, reverse the removal procedure.

Downloaded from www.Manualslib.com manuals search engine

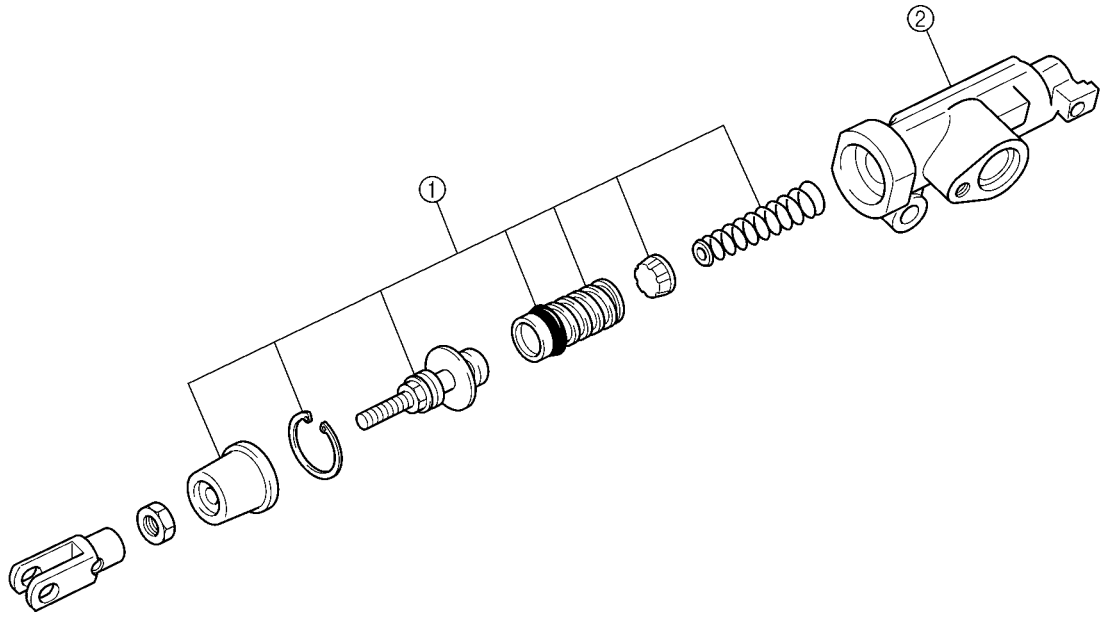

Order	Job name/Part name	Q'ty	Remarks
	Disassembling the rear brake master cylinder		Remove the parts in the order below.
①	Brake master cylinder kit	1	Refer to "ASSEMBLING THE REAR BRAKE MASTER CYLINDER".
②	Brake master cylinder	1	
			For assembly, reverse the disassembly procedure.

Downloaded from www.Manualslib.com manuals search engine

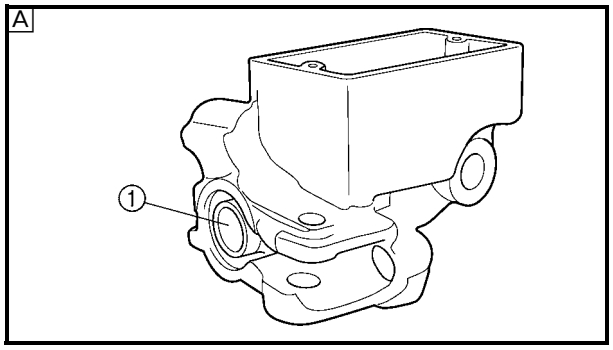

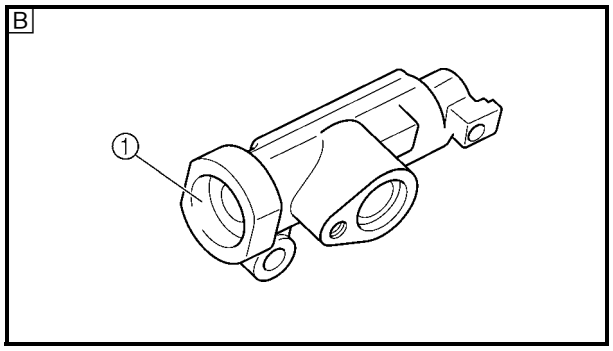

CHECKING THE MASTER CYLINDER

1.Check:
- Brake master cylinder ①
  Wear/scratches → Replace the brake master cylinder assembly.
- Brake master cylinder body
  Cracks/damage → Replace.
- Brake fluid delivery passage
  (brake master cylinder body)
  Blockage → Blow out with compressed air.

A Front
B Rear

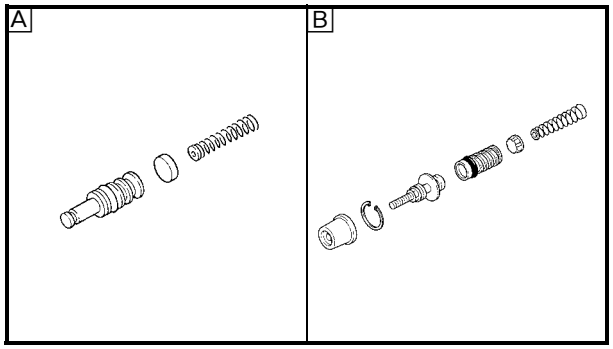

2.Check:
- Brake master cylinder kit
  Scratches/wear/damage → Replace as a set.

A Front
B Rear

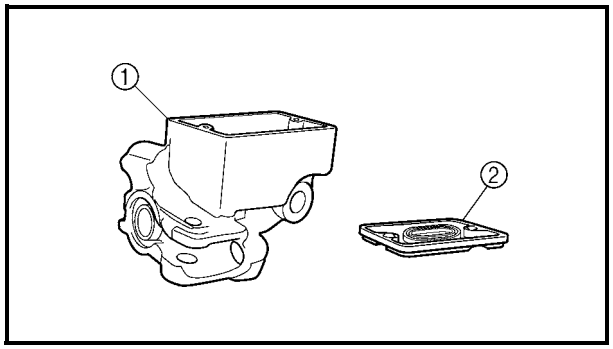

3.Check:
- Front brake master cylinder reservoir ①
- Front brake master cylinder reservoir diaphragm ②
  Cracks/damage → Replace.

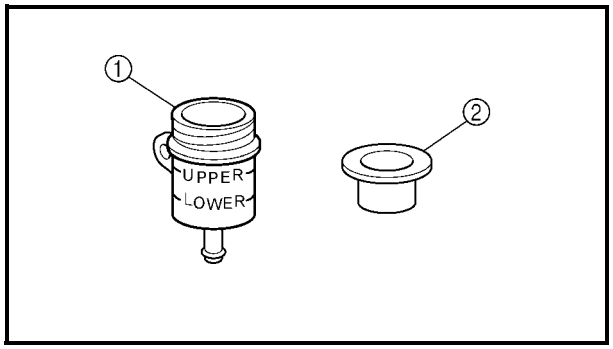

4.Check:
- Rear brake fluid reservoir ①
- Rear brake fluid reservoir diaphragm ②
  Cracks/damage → Replace.

Downloaded from www.Manualslib.com manuals search engine

EB702060

ASSEMBLING THE FRONT BRAKE MASTER CYLINDER

WARNING

- **All internal brake components should be cleaned and lubricated with new brake fluid only before installation.**

Recommended brake fluid:
DOT 4

- **Whenever a master cylinder is disassembled, replace the piston seals and dust seals.**

EB702060

ASSEMBLING THE REAR BRAKE MASTER CYLINDER

WARNING

- **All internal brake components should be cleaned and lubricated with new brake fluid only before installation.**

Recommended brake fluid:
DOT 4

- **Whenever a master cylinder is disassembled, replace the piston seals and dust seals.**

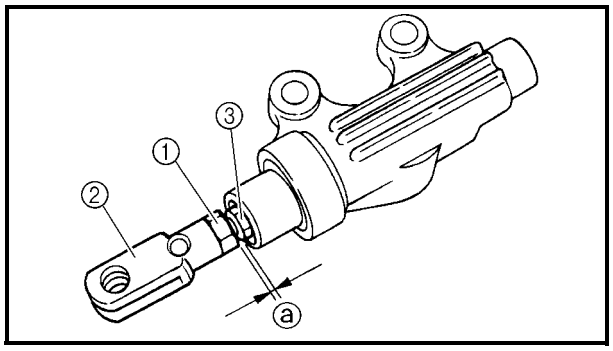

1.Install:
- Brake master cylinder kit
- Nut ①
- Joint ②

NOTE:
Turn the adjusting bolt ③ until the clearance ⓐ is within the specified limits when install the joint ②.

Clearance ⓐ:
5 ~ 6 mm (0.20 ~ 0.24 in)

2.Tighten:
- Nut ①

Downloaded from www.Manualslib.com manuals search engine

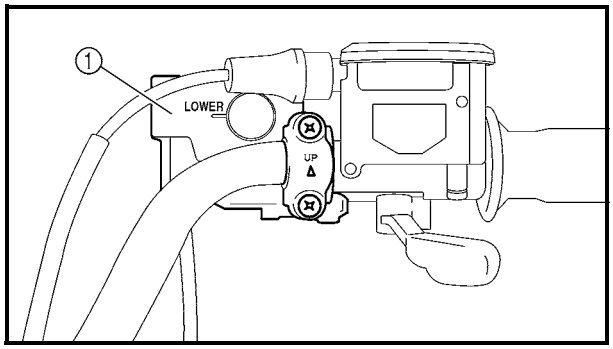

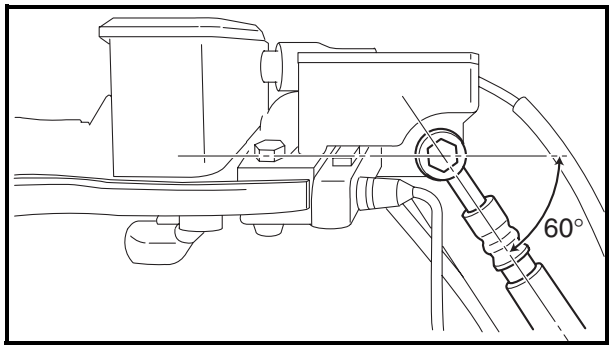

INSTALLING THE FRONT BRAKE MASTER CYLINDER

1.Install:
- Brake master cylinder ①

7 Nm (0.7 m • kg, 5.1 ft • lb)

NOTE:
The "UP" mark on the brake master cylinder bracket should face up.

2.Install:
- Copper washers New
- Brake hose
- Union bolt **27 Nm (2.7 m • kg, 19 ft • lb)**

NOTE:
- Tighten the union bolt while holding the brake hose as shown.
- Turn the handlebar to the left and to the right to check that the brake hose does not touch other parts (throttle cable, wire harness, leads, etc.). Correct if necessary.

WARNING

Proper brake hose routing is essential to insure safe machine operation. Refer to "CABLE ROUTING".

3.Fill:
- Brake fluid reservoir

Recommended brake fluid:
DOT 4

CAUTION:

Brake fluid may damage painted surfaces or plastic parts. Always clean up spilled brake fluid immediately.

WARNING

- **Use only the designated quality brake fluid: other brake fluids may deteriorate the rubber seals, causing leakage and poor brake performance.**
- **Refill with the same type of brake fluid: mixing brake fluids may result in a harmful chemical reaction and lead to poor brake performance.**

Downloaded from www.Manualslib.com manuals search engine

- **Be careful that water does not enter the brake master cylinder when refilling. Water will significantly lower the boiling point of the brake fluid and may result in vapor lock.**

4.Air bleed:
- Brake system
  Refer to “BLEEDING THE HYDRAULIC BRAKE SYSTEM” in CHAPTER 3.

5.Check:
- Brake fluid level
  Brake fluid level is under the “LOWER” level line → Fill up.
  Refer to “CHECKING THE BRAKE FLUID LEVEL” in CHAPTER 3.

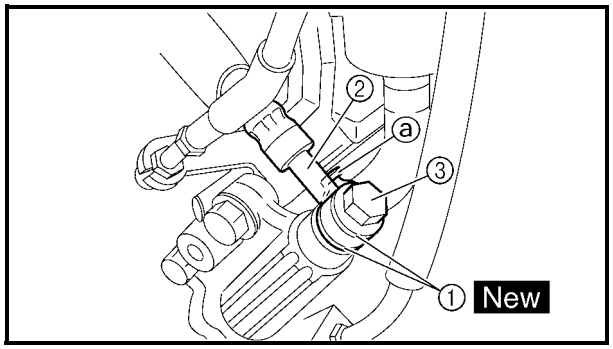

INSTALLING THE REAR BRAKE MASTER CYLINDER

1.Install:
- Copper washers ① New
- Brake hose ②
- Union bolt ③ **30 Nm (3.0 m • kg, 22 ft • lb)**

CAUTION:

When installing the brake hose onto the brake master cylinder, make sure the brake pipe touches the projection ⓐ as shown.

WARNING

Proper brake hose routing is essential to insure safe machine operation. Refer to “CABLE ROUTING”.

Downloaded from www.Manualslib.com manuals search engine

2.Fill:
- Brake fluid reservoir

Recommended brake fluid:
DOT 4

CAUTION:

Brake fluid may damage painted surfaces or plastic parts. Always clean up spilled brake fluid immediately.

WARNING

- **Use only the designated quality brake fluid: other brake fluids may deteriorate the rubber seals, causing leakage and poor brake performance.**
- **Refill with the same type of brake fluid: mixing brake fluids may result in a harmful chemical reaction and lead to poor brake performance.**
- **Be careful that water does not enter the brake master cylinder when refilling. Water will significantly lower the boiling point of the brake fluid and may result in vapor lock.**

3.Air bleed:
- Brake system
  Refer to “BLEEDING THE HYDRAULIC BRAKE SYSTEM” in CHAPTER 3.

4.Check:
- Brake fluid level
  Brake fluid level is under the “LOWER” level line → Fill up.
  Refer to “CHECKING THE BRAKE FLUID LEVEL” in CHAPTER 3.

Downloaded from www.Manualslib.com manuals search engine

FRONT BRAKE CALIPER

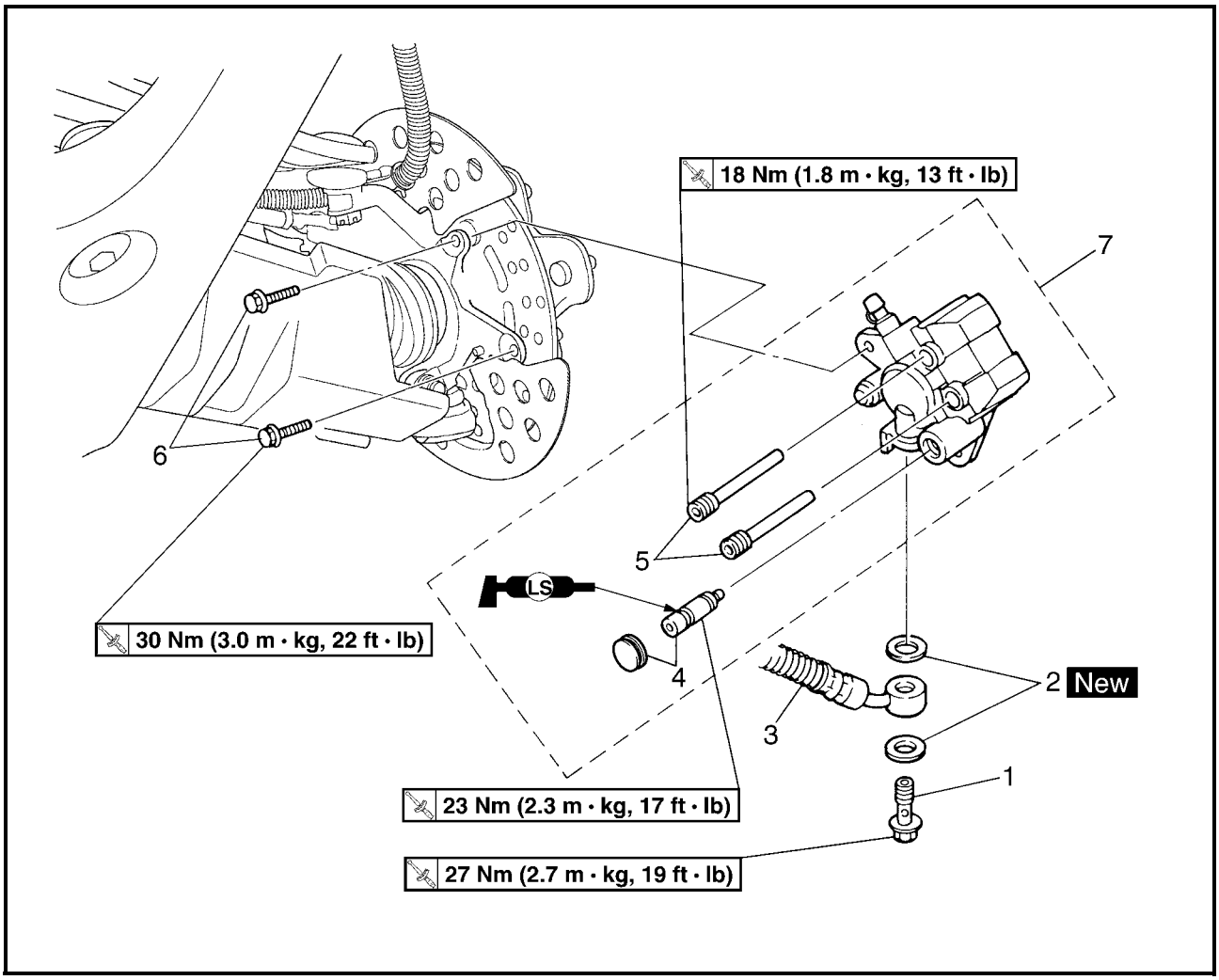

Order	Job name/Part name	Q'ty	Remarks
	Removing the front brake caliper		Remove the parts in the order below.
	Brake fluid		Drain.
	Front wheel		Refer to "FRONT WHEELS".
1	Union bolt	1	Refer to "INSTALLING THE FRONT BRAKE CALIPER".
2	Copper washer	2	
3	Brake hose	1	Disconnect.
4	Cap/retaining bolt	1/1	Loosen.
5	Brake pad holding bolt	2	Loosen.
6	Brake caliper mounting bolt	2	
7	Brake caliper assembly	1	
			For installation, reverse the removal procedure.

Downloaded from www.Manualslib.com manuals search engine

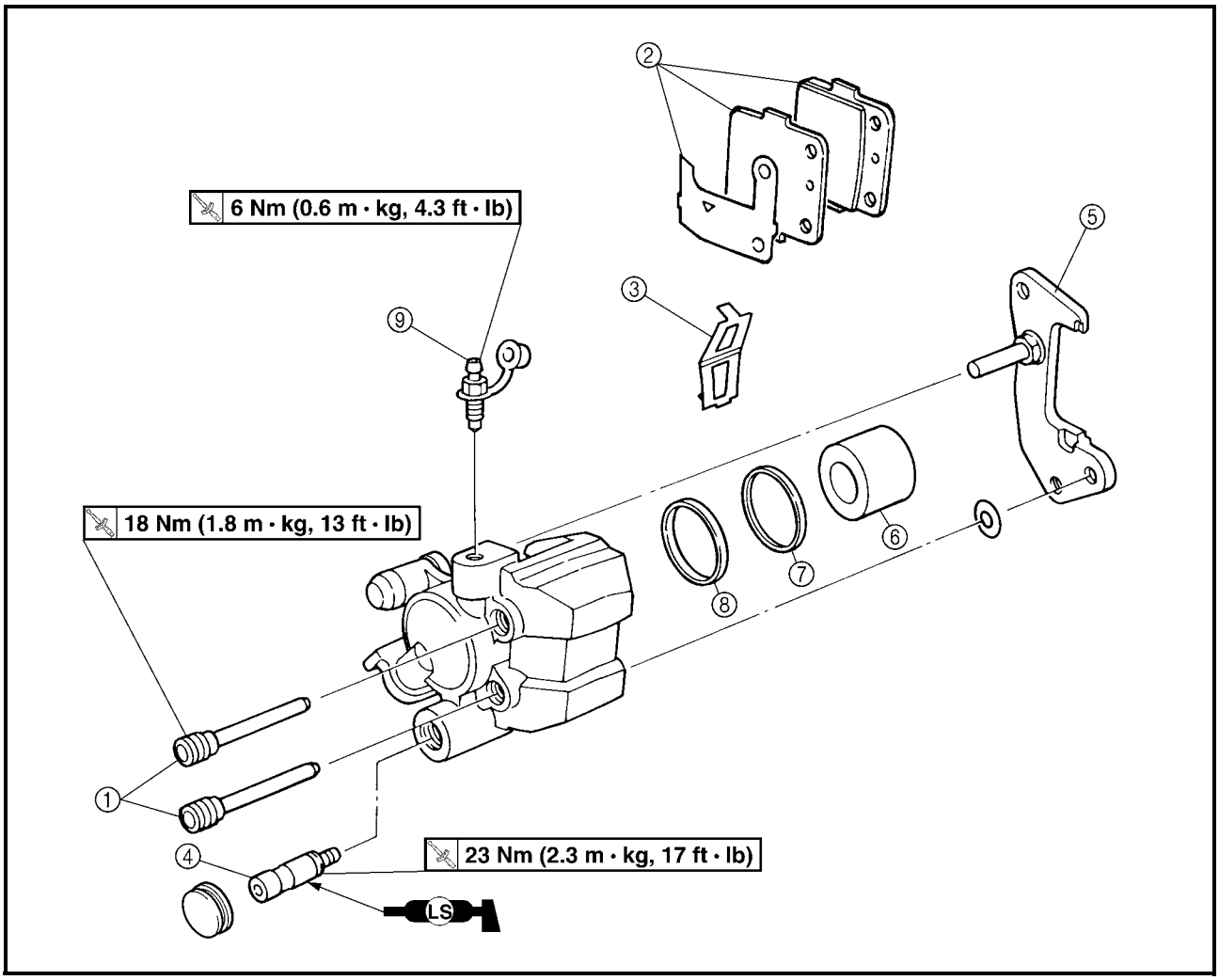

Order	Job name/Part name	Q'ty	Remarks
	Disassembling the front brake caliper		Remove the parts in the order below.
①	Brake pad holding bolt	2	
②	Brake pad/pad shim	2/1	
③	Pad spring	1	
④	Retaining bolt	1	
⑤	Caliper bracket	1	
⑥	Brake caliper piston	1	Refer to "DISASSEMBLING THE FRONT BRAKE CALIPER/ASSEMBLING THE FRONT BRAKE CALIPER".
⑦	Dust seal	1	
⑧	Caliper piston seal	1	
⑨	Bleed screw	1	
			For assembly, reverse the disassembly procedure.

Downloaded from www.Manualslib.com manuals search engine

REAR BRAKE CALIPER

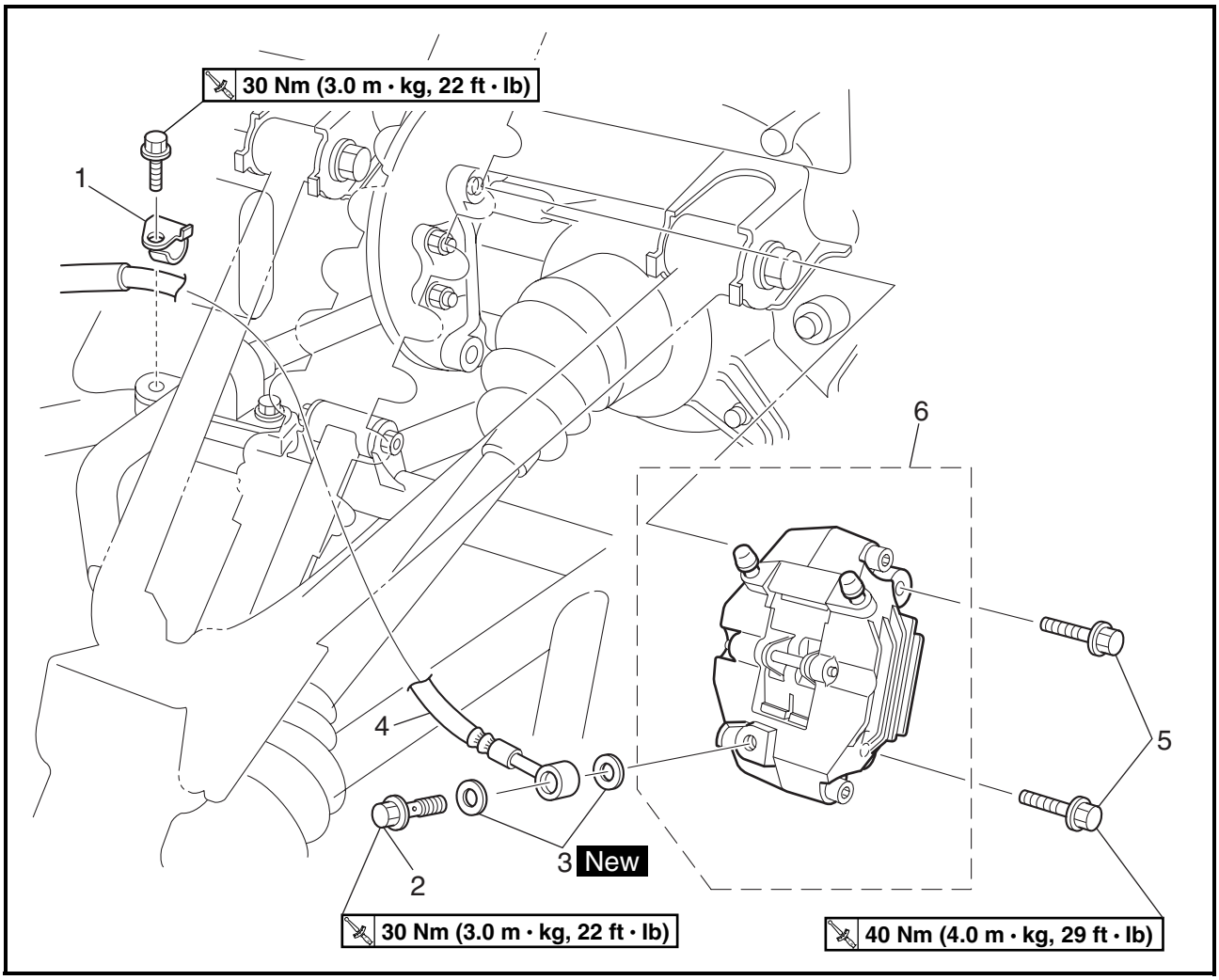

Order	Job name/Part name	Q'ty	Remarks
	Removing the rear brake caliper		Remove the parts in the order below.
	Brake fluid		Drain.
	Rear wheel		Refer to "REAR WHEELS".
1	Brake hose holder	1	
2	Union bolt	1	
3	Copper washer	2	Disconnect. Refer to "INSTALLAING THE REAR BRAKE CALIPER".
4	Brake hose	1	
5	Brake caliper mounting bolt	2	
6	Brake caliper assembly	1	
			For installation, reverse the removal procedure.

Downloaded from www.Manualslib.com manuals search engine

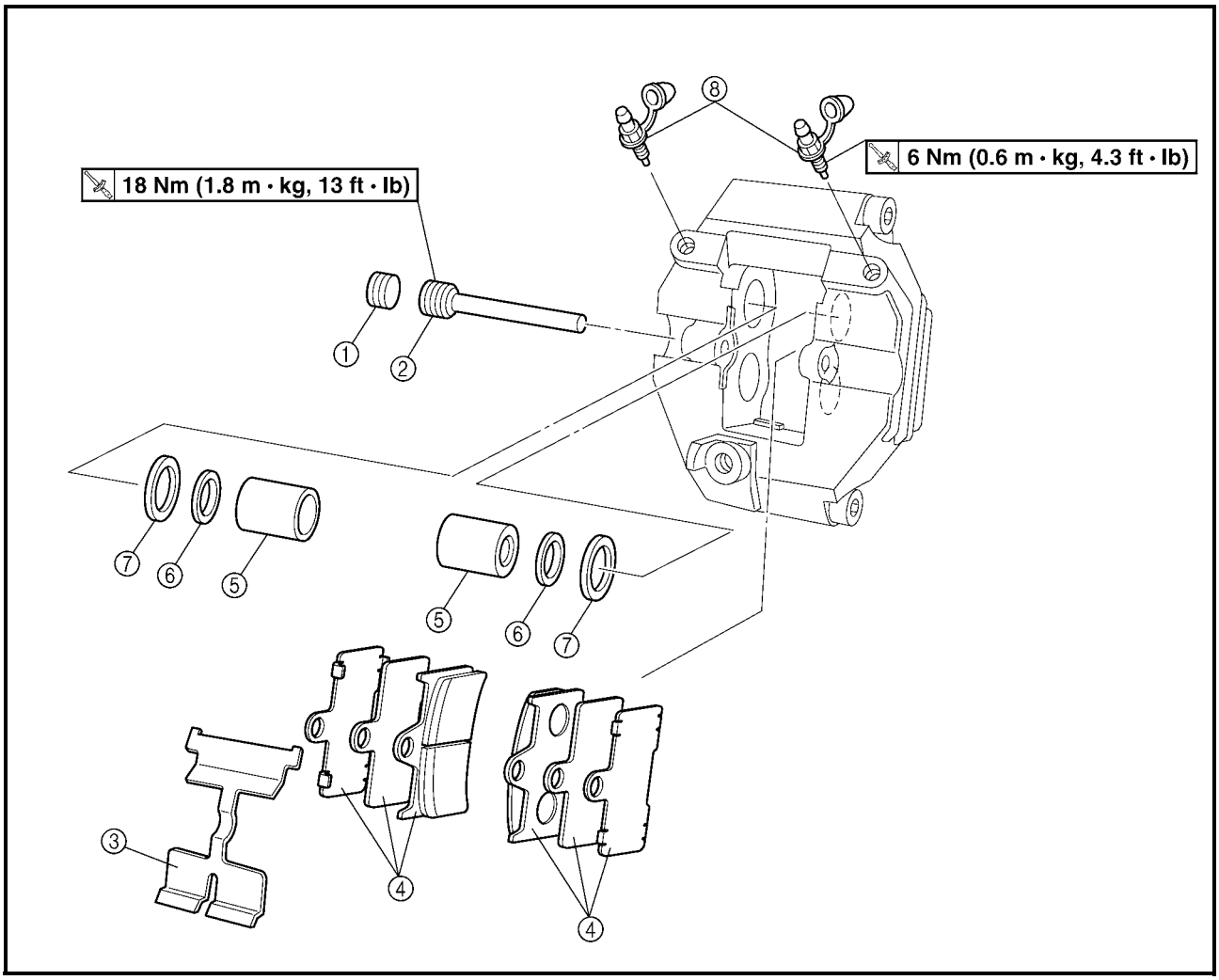

Order	Job name/Part name	Q'ty	Remarks
	Disassembling the rear brake caliper		Remove the parts in the order below.
①	Brake pad holding bolt plug	1	
②	Brake pad holding bolt	1	
③	Pad spring	1	
④	Brake pad/insulator/pad shim	2/2/2	
⑤	Brake caliper piston	4	Refer to "DISASSEMBLING THE REAR BRAKE CALIPER/ASSEMBLING THE REAR BRAKE CALIPER".
⑥	Dust seal	4	
⑦	Caliper piston seal	4	
⑧	Bleed screw	2	
			For assembly, reverse the disassembly procedure.

Downloaded from www.Manualslib.com manuals search engine

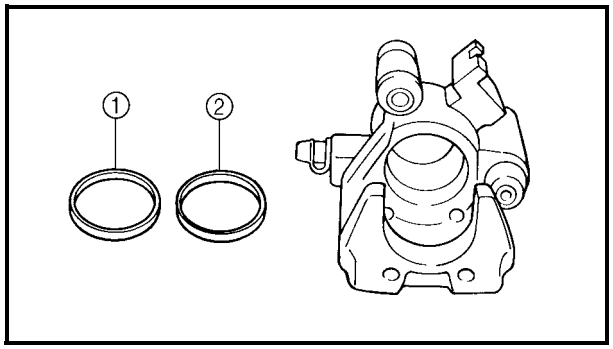

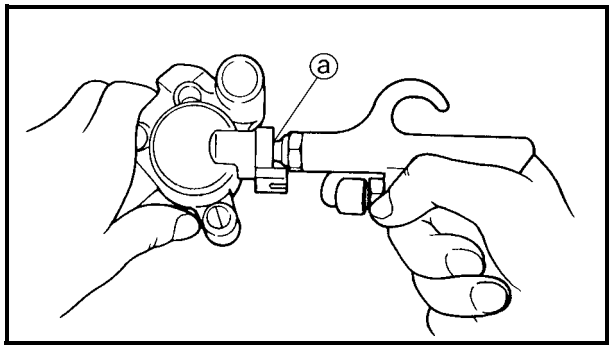

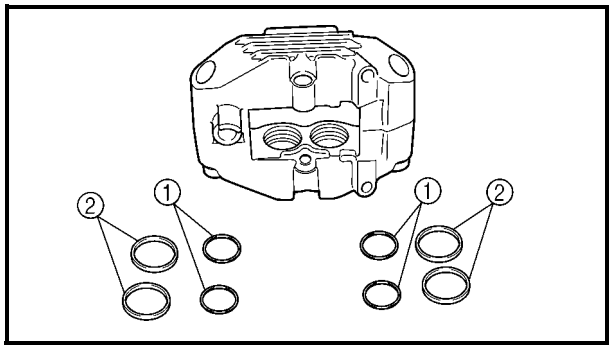

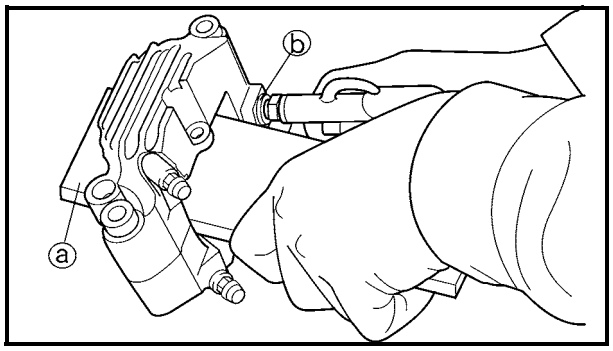

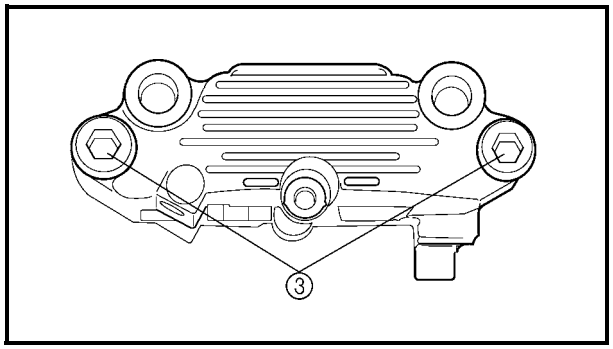

DISASSEMBLING THE BRAKE CALIPER

1.Remove:
- Brake caliper piston
- Dust seal ①
- Caliper piston seal ②

****

Removal steps:
- Blow compressed air into the hose joint opening ⓐ to force out the caliper piston from the brake caliper body.

⚠ WARNING
- **Never try to pry out the caliper piston.**
- **Cover the caliper piston with a rag. Be careful not to get injured when the piston is expelled from the master cylinder.**

- Remove the caliper piston seals.

****

DISASSEMBLING THE REAR BRAKE CALIPER

1.Remove:
- Brake caliper piston
- Dust seals ①
- Caliper piston seals ②

****

Removal steps:
- Secure the left side brake caliper piston with a peace of wood ⓐ.
- Blow compressed air into the hose joint opening ⓑ to force out the caliper piston from the brake caliper body.

⚠ WARNING
- **Never try to pry out the caliper piston.**
- **Do not loose the bolt ③.**

- Remove the caliper piston seals.

****

Downloaded from www.Manualslib.com manuals search engine

EB702040

CHECKING THE FRONT AND REAR BRAKE CALIPER

Recommended brake component replacement schedule:	
Brake pads	As required
Piston seal, dust seal	Every two years
Brake hoses	Every two years
Brake fluid	Replace when braked are disassembled.

WARNING

All internal brake components should be cleaned in new brake fluid only. Do not use solvents as they will cause seals to swell and distort.

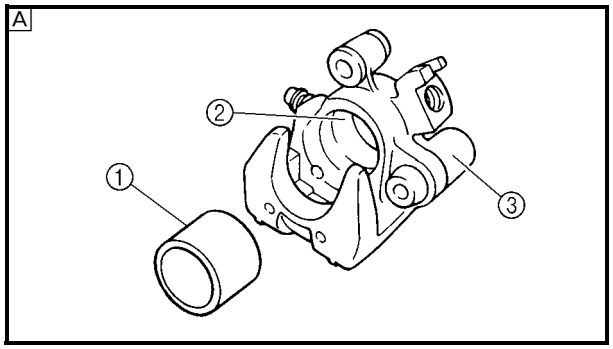

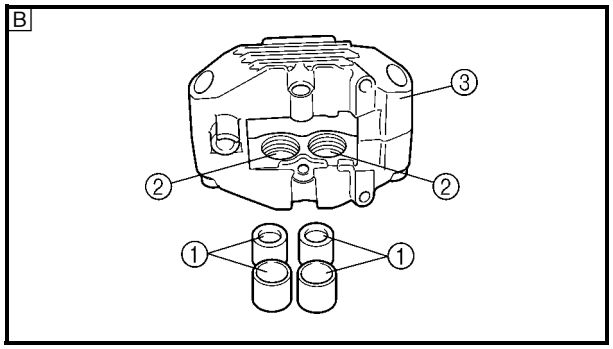

1.Check:

- Brake caliper piston ①
  Scratches/rust/wear → Replace the brake caliper assembly.
- Brake caliper cylinder ②
  Wear/scratches → Replace the brake caliper assembly.
- Brake caliper body ③
  Cracks/damage → Replace.
- Brake fluid delivery passage (brake caliper body)
  Blockage → Blow out with compressed air.

WARNING

Replace the caliper piston seal and dust seal whenever the brake caliper is disassembled.

A Front
B Rear

Downloaded from www.Manualslib.com manuals search engine

ASSEMBLING THE FRONT BRAKE CALIPER

WARNING

- **All internal brake components should be cleaned and lubricated with new brake fluid only before installation.**

Recommended brake fluid:
DOT 4

- **Replace the caliper piston seal whenever a brake caliper is disassembled.**

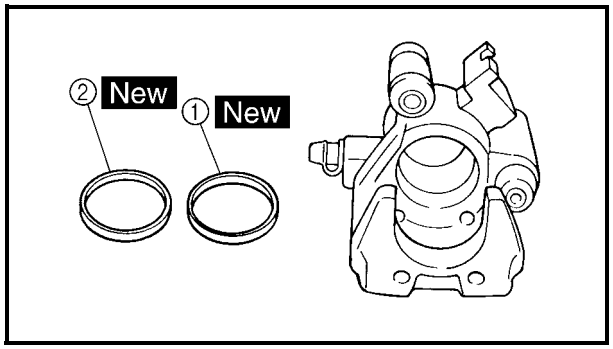

1.Install:
- Caliper piston seal ① New
- Dust seal ② New

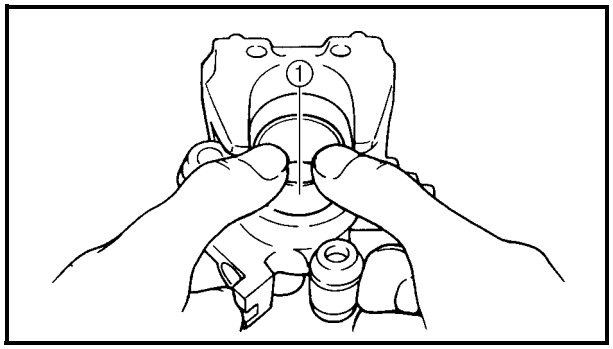

2.Install:
- Brake caliper piston ①

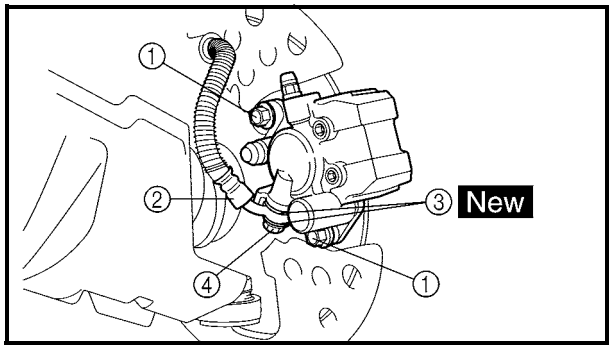

INSTALLING THE FRONT BRAKE CALIPER

1.Install:
- Brake caliper assembly
- Brake caliper mounting bolt ①
  30 Nm (3.0 m • kg, 22 ft • lb)
- Brake hose ②
- Copper washers ③ New
- Union bolt ④ **27 Nm (2.7 m • kg, 19 ft • lb)**

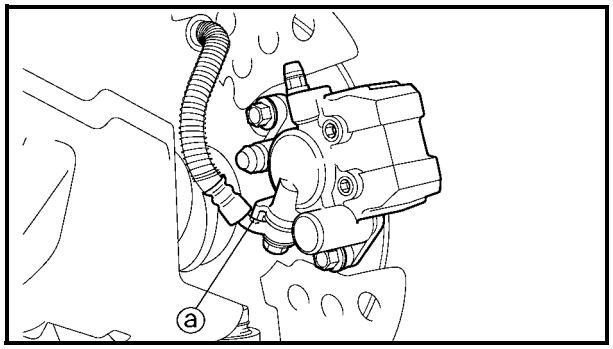

CAUTION:

When installing the brake hose on the brake caliper, make sure that the brake pipe touches the projection ⓐ on the brake caliper.

Downloaded from www.Manualslib.com manuals search engine

WARNING

Proper brake hose routing is essential to insure safe motorcycle operation. Refer to "CABLE ROUTING".

2.Fill:
- Brake reservoir

	Recommended brake fluid: DOT 4

CAUTION:

Brake fluid may damage painted surfaces or plastic parts. Always clean up spilled brake fluid immediately.

WARNING

- **Use only the designated quality brake fluid: other brake fluids may deteriorate the rubber seals, causing leakage and poor brake performance.**
- **Refill with the same type of brake fluid: mixing brake fluids may result in a harmful chemical reaction and lead to poor brake performance.**
- **Be careful that water does not enter the master cylinder when refilling. Water will significantly lower the boiling point of the brake fluid and may result in vapor lock.**

3.Bleed:
- Brake system
  Refer to "BLEEDING THE HYDRAULIC BRAKE SYSTEM" in CHAPTER 3.

4.Check:
- Brake fluid level
  Brake fluid level is under the "LOWER" level line → Fill up.
  Refer to "CHEKING THE BRAKE FLUID LEVEL" in CHAPTER 3.

Downloaded from www.Manualslib.com manuals search engine

ASSEMBLING THE REAR BRAKE CALIPER

WARNING

- **All internal brake components should be cleaned and lubricated with new brake fluid only before installation.**

Recommended brake fluid:
DOT 4

- **Replace the caliper piston seal whenever a brake caliper is disassembled.**

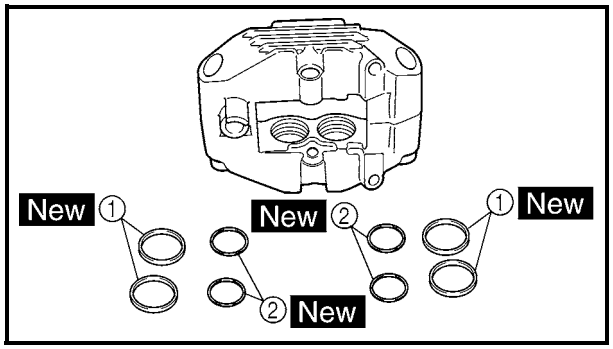

1.Install:
- Caliper piston seal ① New
- Dust seal ② New

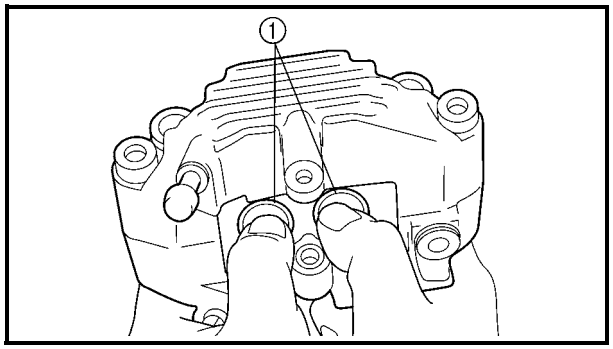

2.Install:
- Brake caliper piston ①

Downloaded from www.Manualslib.com manuals search engine

INSTALLING THE REAR BRAKE CALIPER

1.Install:
- Brake caliper assembly
- Brake caliper mounting bolt

30 Nm (3.0 m • kg, 22 ft • lb)

- Brake hose
- Copper washers New
- Union bolt 30 Nm (3.0 m • kg, 22 ft • lb)

2.Fill:
- Brake reservoir

Recommended brake fluid:
DOT 4

CAUTION:

Brake fluid may damage painted surfaces or plastic parts. Always clean up spilled brake fluid immediately.

WARNING

- **Use only the designated quality brake fluid: other brake fluids may deteriorate the rubber seals, causing leakage and poor brake performance.**
- **Refill with the same type of brake fluid: mixing brake fluids may result in a harmful chemical reaction and lead to poor brake performance.**
- **Be careful that water does not enter the master cylinder when refilling. Water will significantly lower the boiling point of the brake fluid and may result in vapor lock.**

3.Air bleed
- Brake system
  Refer to “BLEEDING THE HYDRAULIC BRAKE SYSTEM” in CHAPTER 3.

4.Check:
- Brake fluid level
  Brake fluid level is under the “LOWER” level line → Fill up.
  Refer to “CHECKING THE BRAKE FLUID LEVEL” in CHAPTER 3.

Downloaded from www.Manualslib.com manuals search engine

STEERING SYSTEM

HANDLEBAR

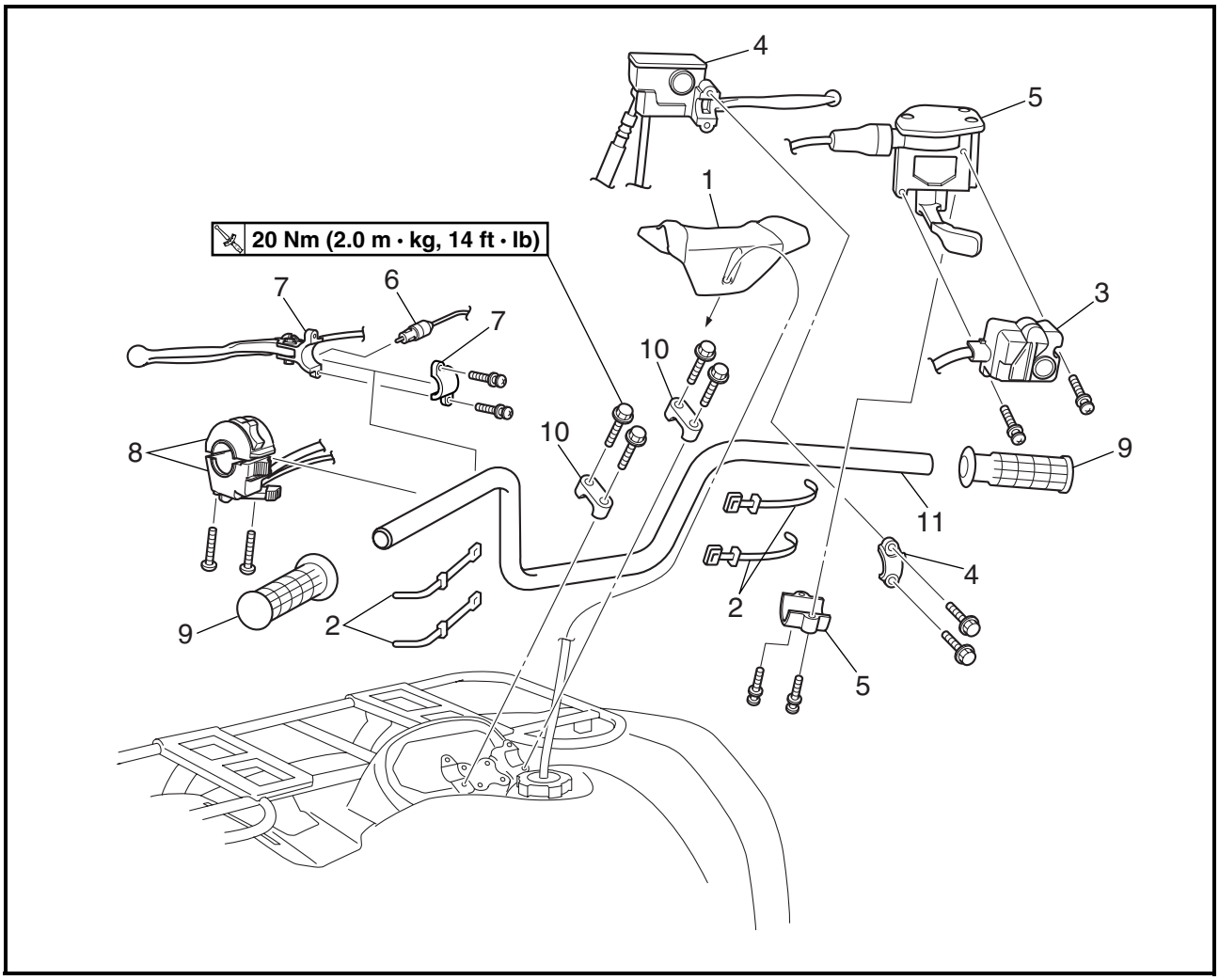

Order	Job name/Part name	Q'ty	Remarks
	Removing the handlebar		Remove the parts in the order below.
1	Handlebar cover	1	
2	Band	4	
3	On-command four-wheel drive switch and differential gear lock switch	1	Refer to "INSTALLING THE MASTER CYLINDER ASSEMBLY".
4	Master cylinder assembly/bracket	1/1	
5	Throttle lever assembly/bracket	1/1	
6	Rear brake switch	1	Refer to "REMOVING THE REAR BRAKE SWITCH".
7	Rear brake lever/bracket	1/1	Refer to "INSTALLING THE REAR BRAKE LEVER".
8	Handlebar switch	1	
9	Handlebar grip	2	
10	Handlebar holder	2	Refer to "INSTALLING THE HANDLEBAR".
11	Handlebar	1	Refer to "INSTALLING THE HANDLEBAR".
			For installation, reverse the removal procedure.

Downloaded from www.Manualslib.com manuals search engine

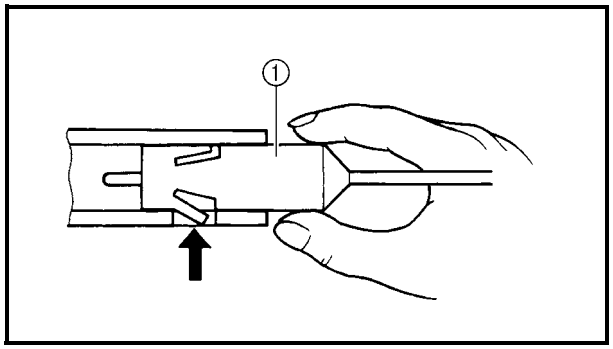

REMOVING THE REAR BRAKE SWITCH

1.Remove:
- Rear brake switch ①

NOTE:
Push the fastener when removing the rear brake switch out of the rear brake lever holder.

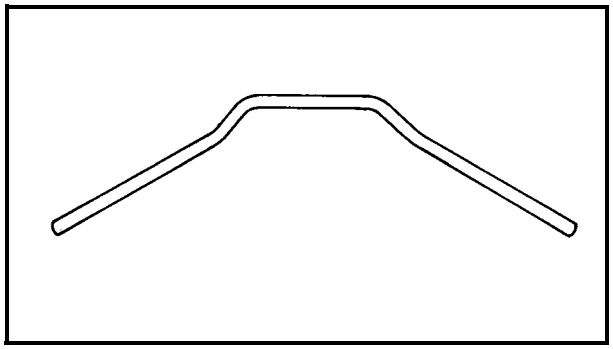

CHECKING THE HANDLEBAR

1.Inspect:
- Handlebar
  Bends/cracks/damage → Replace.

⚠ WARNING
Do not attempt to straighten a bent handlebar as this may dangerously weaken the handlebar.

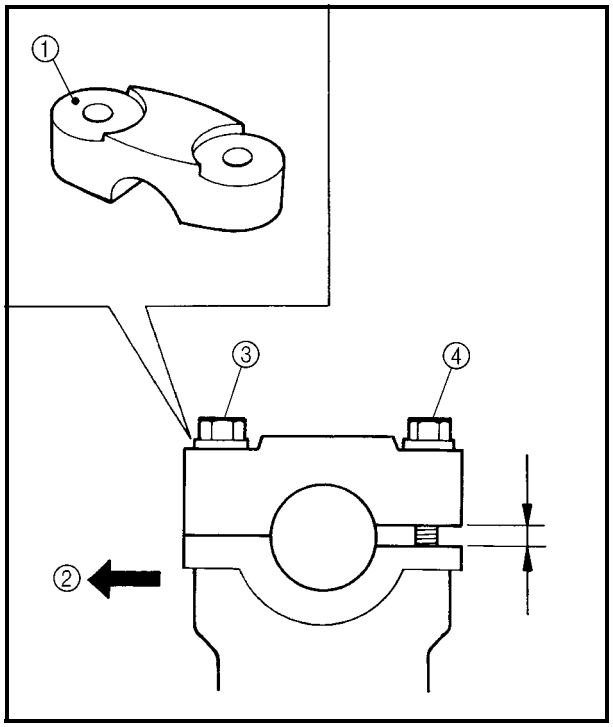

INSTALLING THE HANDLEBAR

1.Install:
- Handlebar
- Handlebar holders

20 Nm (2.0 m • kg, 14 ft • lb)

NOTE:
The upper handlebar holder should be installed with the punched mark ① forward ②.

CAUTION:
First tighten the bolts ③ on the front side of the handlebar holder, and then tighten the bolts ④ on the rear side.

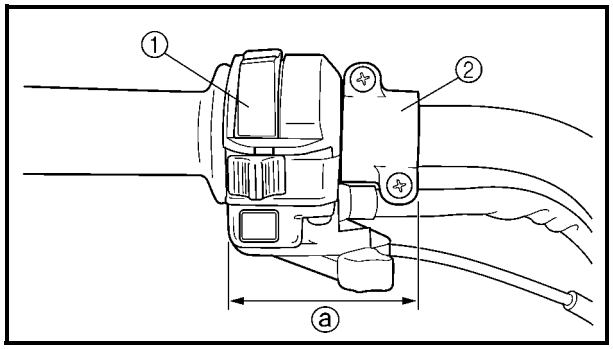

INSTALLING THE REAR BRAKE LEVER

1.Install:
- Handlebar switch ①
- Rear brake lever
- Lever bracket ②

NOTE:
Install the lever bracket as shown.

ⓐ 66 mm (2.6 in)

Downloaded from www.Manualslib.com manuals search engine

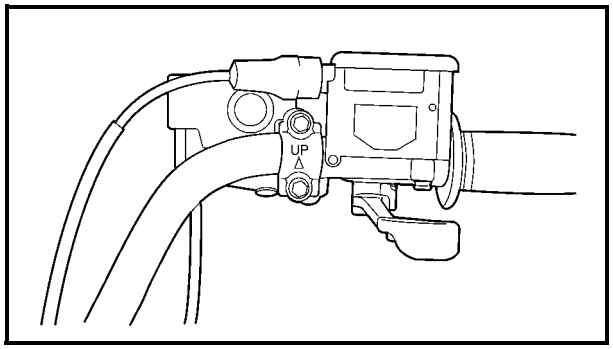

INSTALLING THE MASTER CYLINDER ASSEMBLY

1.Install:

- Throttle lever assembly
- Master cylinder assembly

7 Nm (0.7 m • kg, 5.1 ft • lb)

NOTE:

The “UP” mark on the master cylinder bracket should face up.

Downloaded from www.Manualslib.com manuals search engine

STEERING STEM

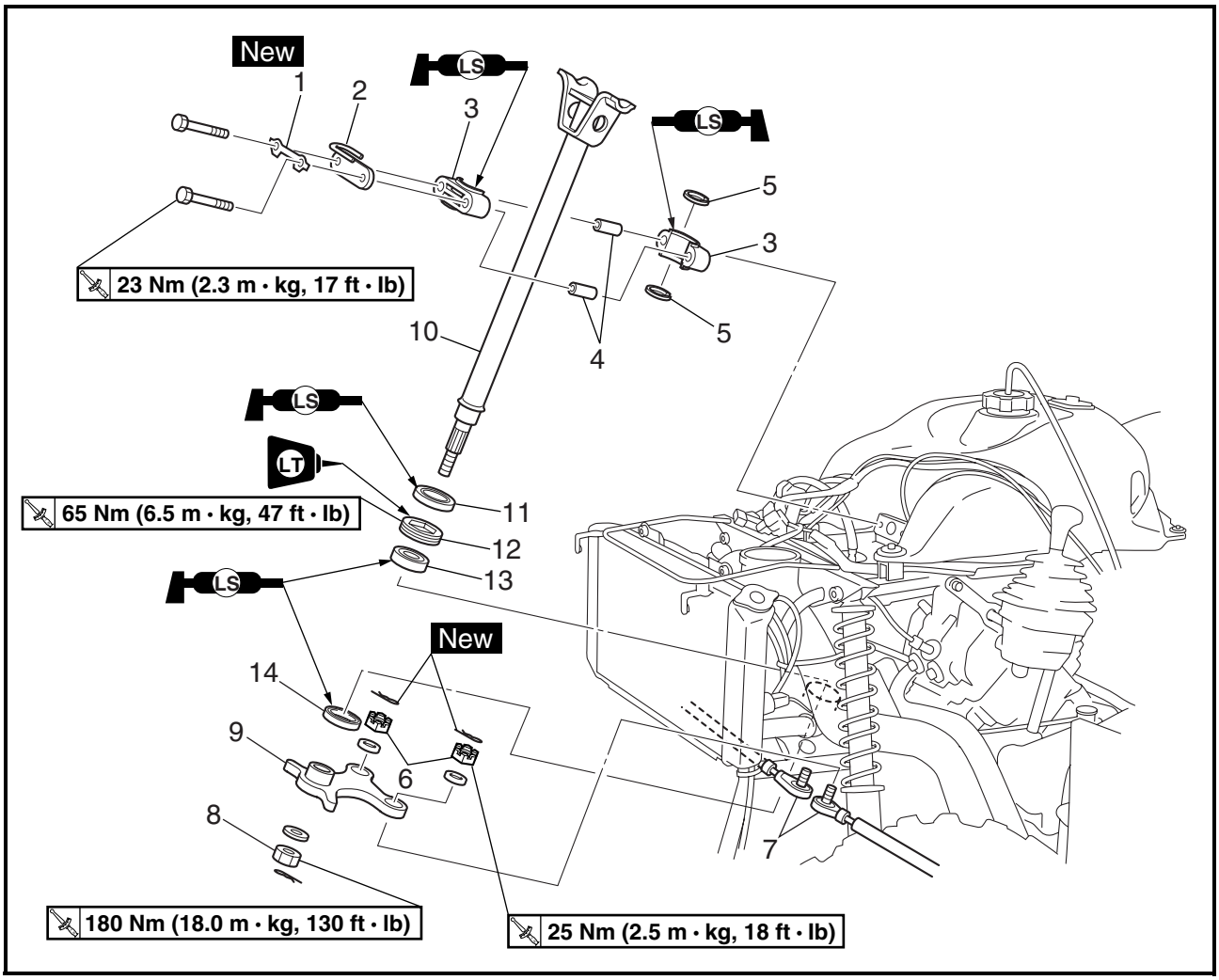

Order	Job name/Part name	Q'ty	Remarks
	Removing the steering		Remove the parts in the order below.
	Handlebar		Refer to "HANDLEBAR".
	Seat		Refer to "SEAT, CARRIERS, FENDERS AND FUEL TANK" in CHAPTER 3.
	Front fender		
1	Lock washer	1	Refer to "INSTALLING THE CABLE GUIDE".
2	Cable guide	1	
3	Steering stem bushing	2	
4	Collar	2	
5	Oil seal	2	
6	Tie rod end nut	2	
7	Tie rod	2	Disconnect.
8	Steering stem nut	1	
9	Pitman arm	1	
10	Steering stem	1	

Downloaded from www.Manualslib.com manuals search engine

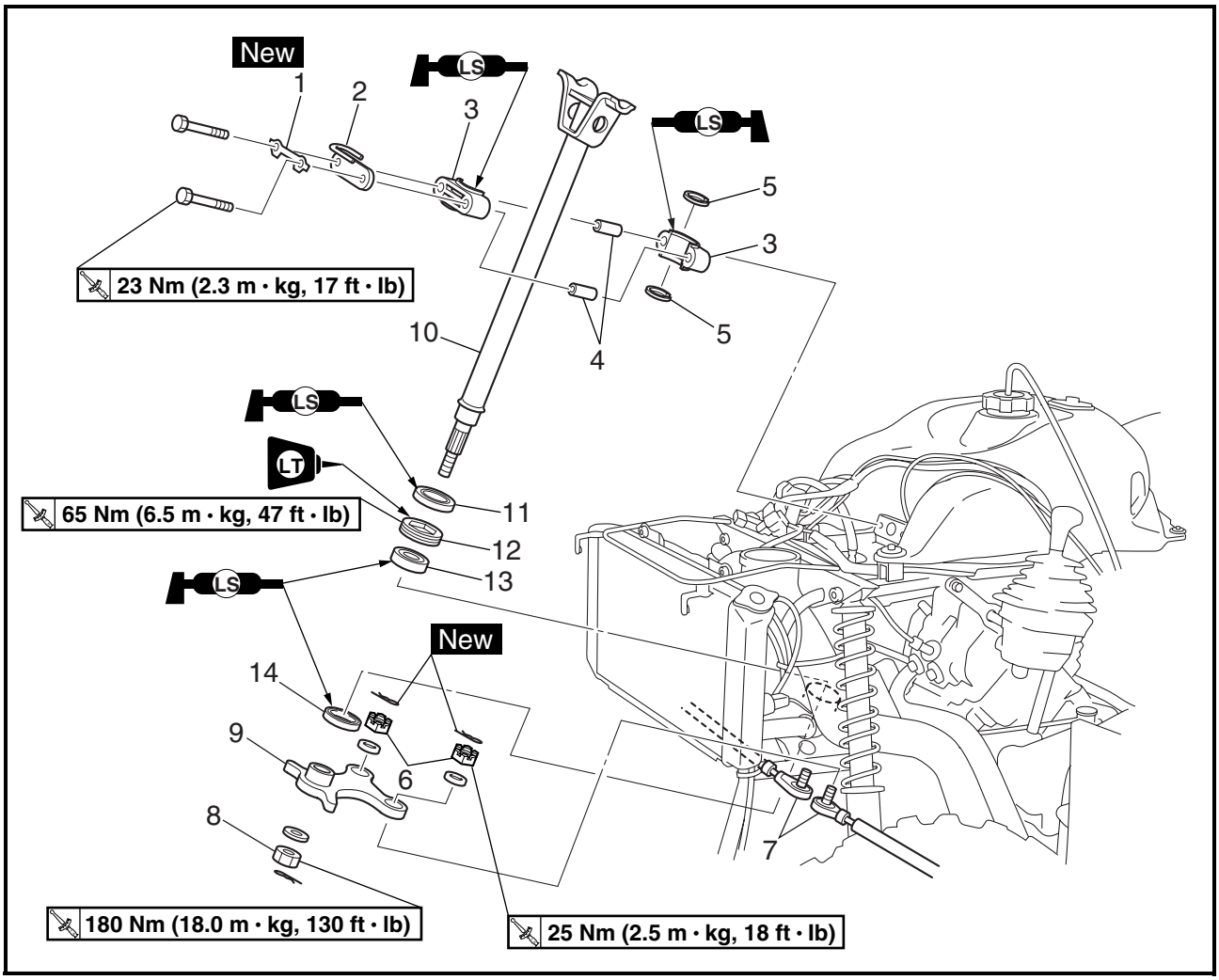

Order	Job name/Part name	Q'ty	Remarks
11	Oil seal	1	
12	Bearing retainer	1	Refer to "REMOVING/INSTALLING THE BEARING RETAINER".
13	Bearing	1	
14	Oil seal	1	
			For installation, reverse the removal procedure.

Downloaded from www.Manualslib.com manuals search engine

REMOVING THE BEARING RETAINER

1.Remove:
- Bearing retainer (steering stem)

	Damper rod holder (30 mm): P/N. YM-01327, 90890-01327

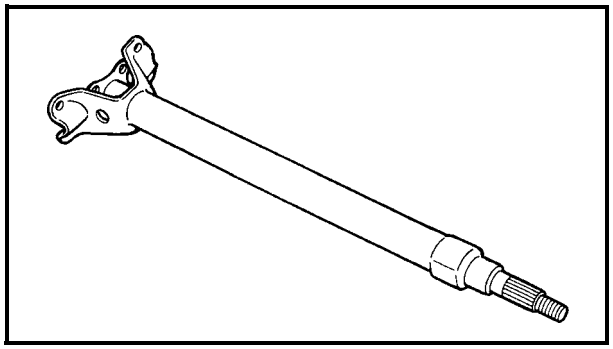

CHECKING THE STEERING STEM

1.Inspect:
- Steering stem
  Bends → Replace.

⚠ WARNING

Do not attempt to straighten a bent stem; this may dangerously weaken the stem.

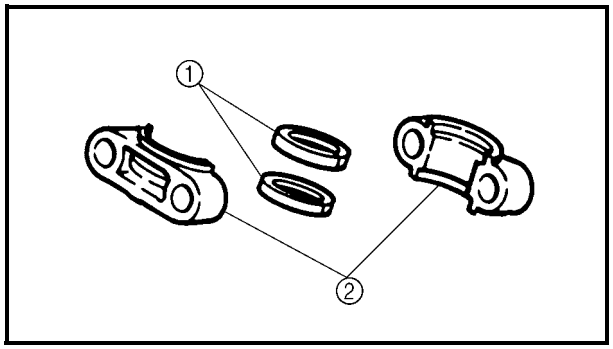

2.Check:
- Oil seals ①
- Steering stem bushings ②
  Wear/damage → Replace.

INSTALLING THE BEARING RETAINER

1.Install:
- Bearing retainer (steering stem)

40 Nm (4.0 m • kg, 29 ft • lb)

	Damper rod holder (30 mm): P/N. YM-01327, 90890-01327

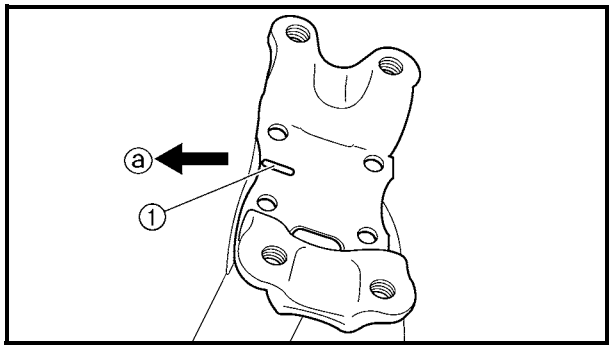

INSTALLING THE STEERING STEM

1.Install
- Steering stem

NOTE:

The steering stem should be installed with the paint mark ① in the forward ⓐ position.

Downloaded from www.Manualslib.com manuals search engine

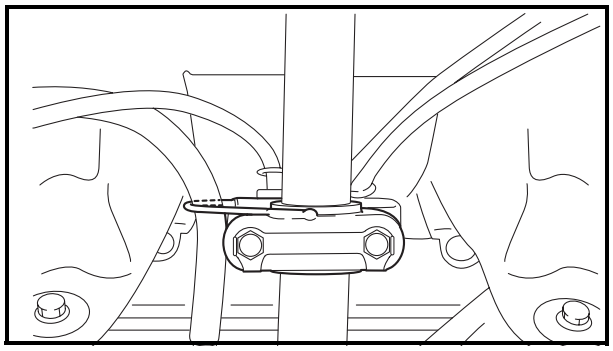

INSTALLING THE CABLE GUIDE

1.Install
- Cable guide
- Lock washer New

23 Nm (2.3 m • kg, 17 ft • lb)

2.Bend the lock washer tab along a flat side of the bolt.

NOTE:

Pass the cables and hoses through the cable guide. Refer to “CABLE ROUTING” in CHAPTER 2.

Downloaded from www.Manualslib.com manuals search engine

TIE ROD AND STEERING KNUCKLE

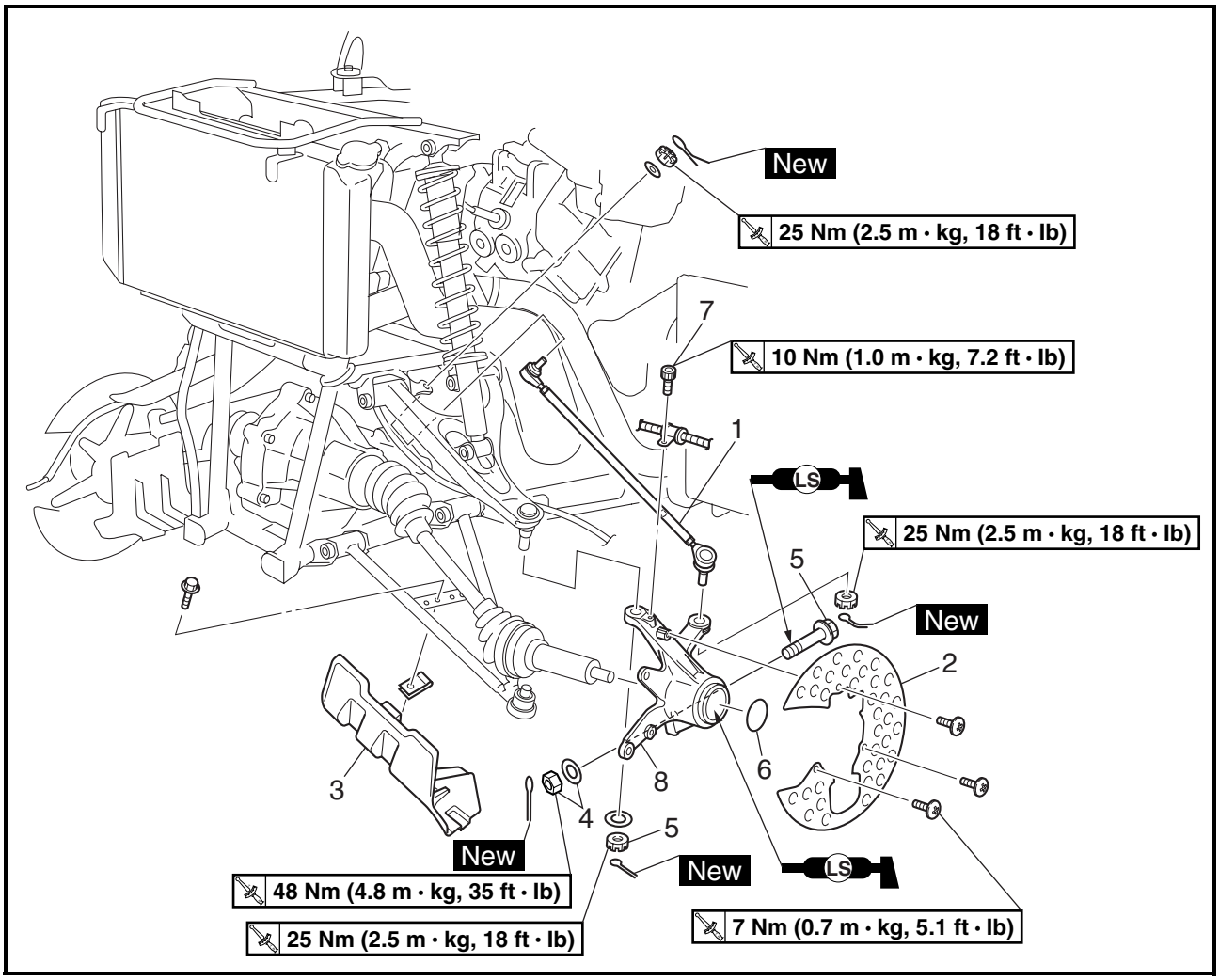

Order	Job name/Part name	Q'ty	Remarks
	Removing the tie rod and steering knuckle		Remove the parts in the order below.
	Front fender		Refer to "SEAT, CARRIERS, FENDERS AND FUEL TANK" in CHAPTER 3.
	Front wheel/brake disc		Refer to "FRONT WHEELS".
1	Tie rod	1	Refer to "INSTALLING THE TIE ROD".
2	Brake disc guard	1	
3	Front protector	1	
4	Bolt/washer/nut	1/1/1	
5	Nut	1	
6	O-ring	1	
7	Brake hose holder bolt	1	
8	Steering knuckle	1	Refer to "REMOVING THE STEERING KNUCKLE".
			For installation, reverse the removal procedure.

Downloaded from www.Manualslib.com manuals search engine

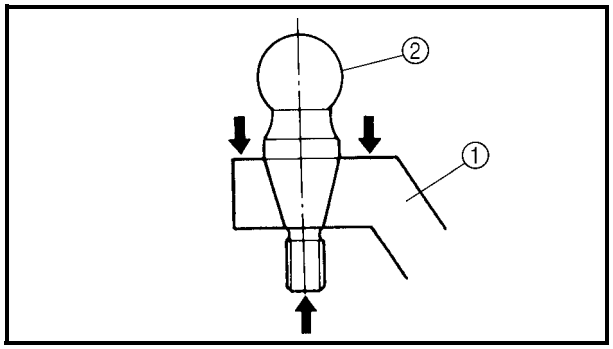

REMOVING THE STEERING KNUCKLE

1.Remove:
- Steering knuckle ①

NOTE:
Use a general puller to separate the ball joint ② and steering knuckle.

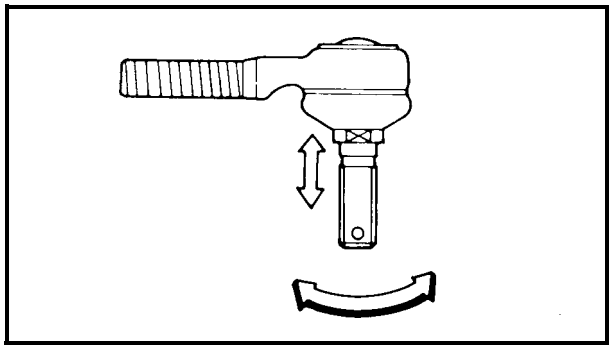

CHECKING THE TIE ROD

1.Check:
- Tie rod free play and movement
  Free play → Replace the tie rod end.
  Turns roughly → Replace the tie rod end.

2.Check:
- Tie rod
- Bends/damage → Replace.

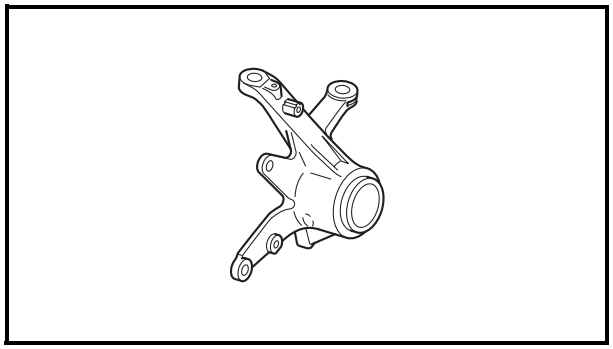

CHECKING THE STEERING KNUCKLE

1.Check:
- Steering knuckle
  Damage/pitting → Replace.

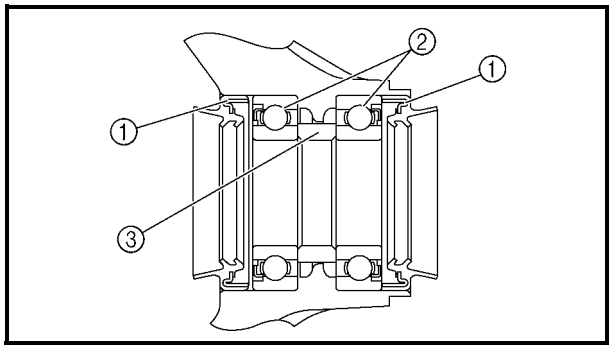

2.Check:
- Front wheel bearings
  Bearings allow play in the wheel hubs or the wheel turns roughly → Replace.
- Oil seals
  Damage → Replace.

****

Replacement steps:
- Clean the outside of the steering knuckle.
- Remove the oil seals ①.
- Drive out the bearings ②.

⚠ WARNING
Eye protection is recommended when using striking tools.

- Remove the spacer ③.
- Apply lithium base grease to the bearings and oil seals.
- Install the spacer to the steering knuckle.

Downloaded from www.Manualslib.com manuals search engine

● Install the new bearings.

NOTE:
Install the outside bearing first.

CAUTION:
Do not strike the center race or balls of the bearing. Contact should be made only with the outer race.

● Install a new oil seal.

NOTE:
When installing the oil seals, the “seal side” of the oil seal faces out.

****

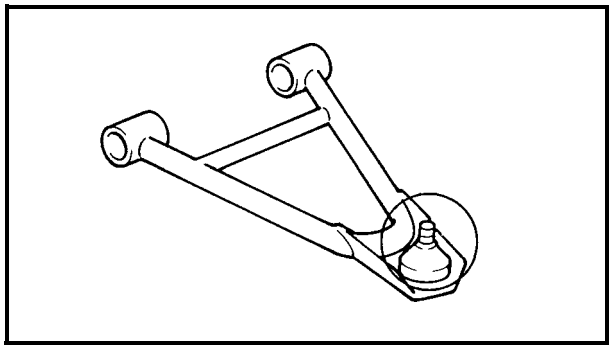

CHECKING THE BALL JOINT

1.Check:
- Ball joint
  Damage/pitting → Replace the front arm.
  Free play → Replace the front arm.
  Turns roughly → Replace the front arm.

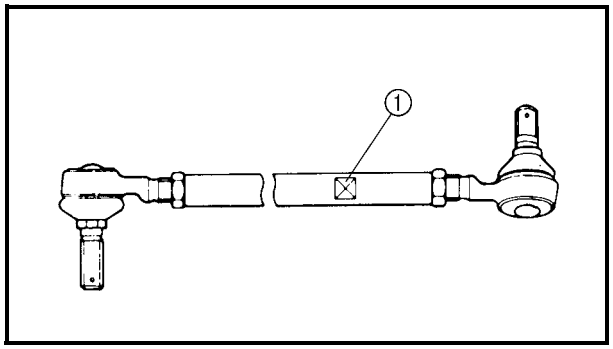

CHECKING THE TIE ROD

1.Install:
- Tie rods (left and right)

25 Nm (2.5 m • kg, 18 ft • lb)

NOTE:
The tie rod which must be installed on the out side has grooves ①.

2.Adjust:
- Toe-in
  Refer to “ADJUSTING THE TOE-IN” in CHAPTER 3.

Downloaded from www.Manualslib.com manuals search engine

FRONT ARMS AND FRONT SHOCK ABSORBER

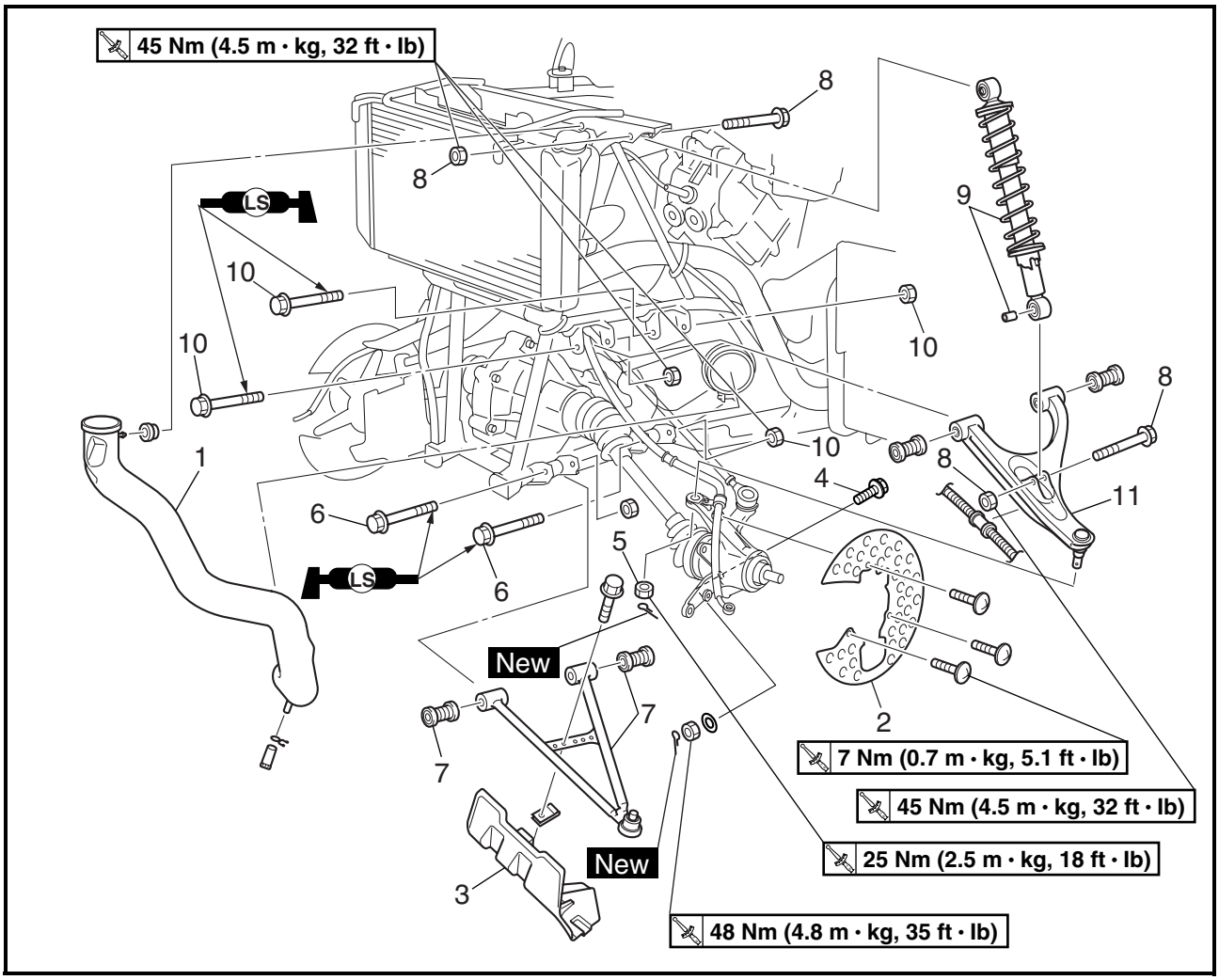

Order	Job name/Part name	Q'ty	Remarks
	Removing the front arms and front shock absorber		Remove the parts in the order below.
	Engine skid plate (front)		Refer to "SEAT, CARRIERS, FENDERS AND FUEL TANK" in CHAPTER 3.
	Front fender		
	Front wheel/brake disc		Refer to "FRONT AND REAR WHEELS".
1	Air duct	1	
2	Brake disc guard	1	
3	Front protector	1	

Downloaded from www.Manualslib.com manuals search engine

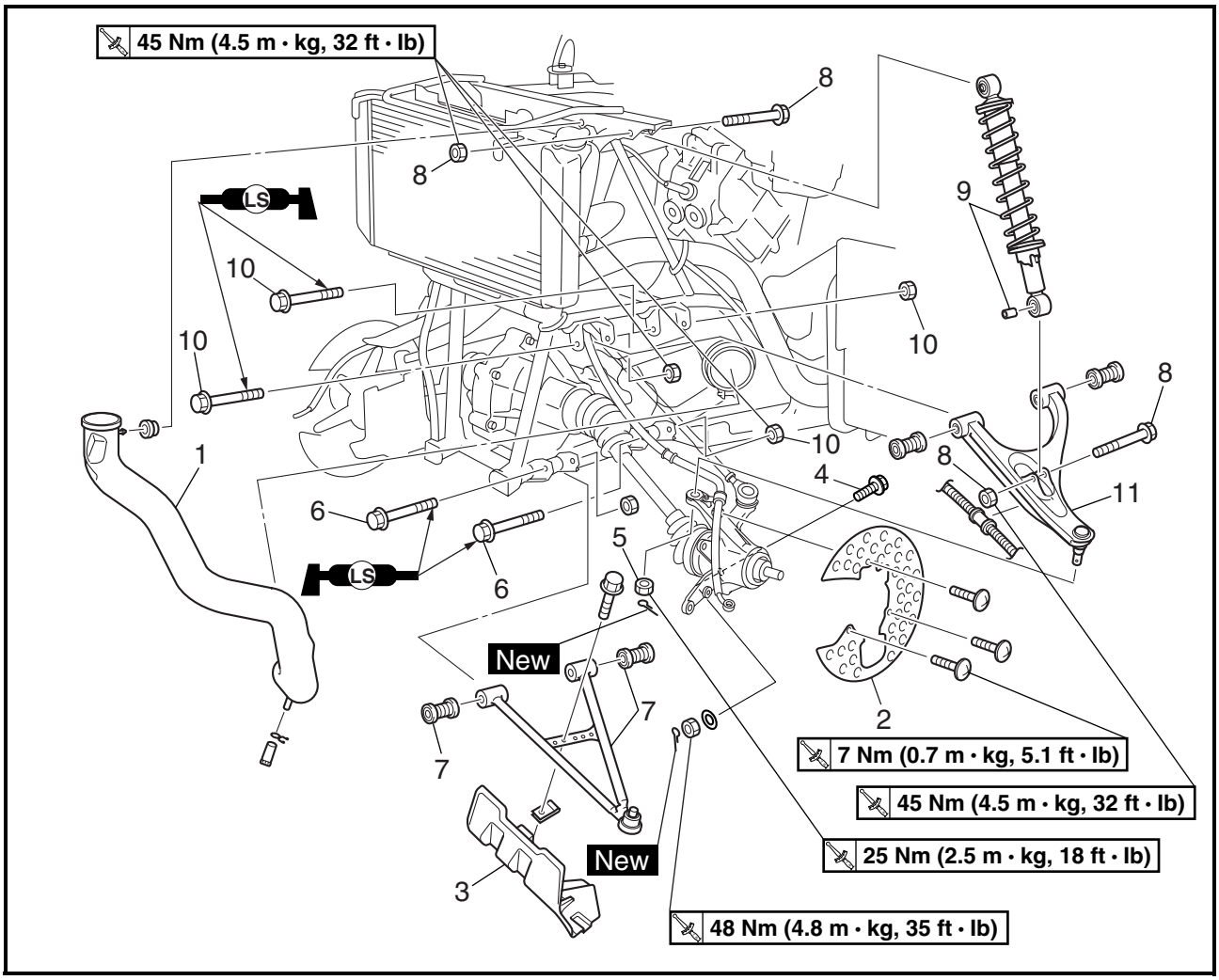

Order	Job name/Part name	Q'ty	Remarks
4	Bolt/washer/nut	1/1/1	Refer to "REMOVING THE FRONT ARMS" and "INSTALLING THE FRONT ARMS AND FRONT SHOCK ABSORBER".
5	Nut	1	
6	Bolt/nut	2/2	
7	Front arm (lower)/bushing	1/2	
8	Nut/bolt	2/2	
9	Front shock absorber/collar	1/1	
10	Bolt/nut	2/2	
11	Front arm (upper)/bushing	1/2	
			For installation, reverse the removal procedure.

Downloaded from www.Manualslib.com manuals search engine

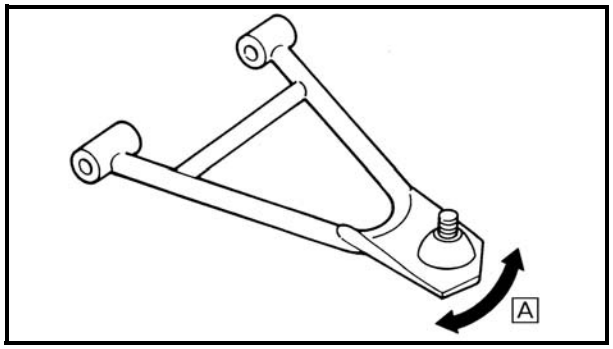

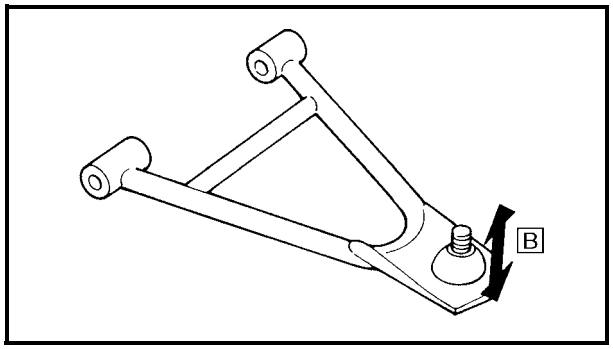

REMOVING THE FRONT ARMS

1.Check:
- Front arm free play

****

Checking steps:
- Check the front arm side play [A] by moving it from side to side.
  If side play is noticeable, check the bushings.
- Check the front arm vertical movement [B] by moving it up and down.
  If the vertical movement is tight or rough, or if there is binding, check the bushings.

****

2.Remove:
- Front arms

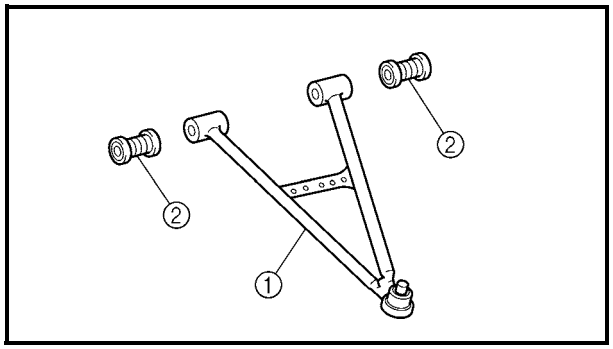

CHECKING THE FRONT ARM

1.Check:
- Front arms ①
  Bends/damage → Replace.

2.Check:
- Bushings ②
  Wear/damage → Replace.

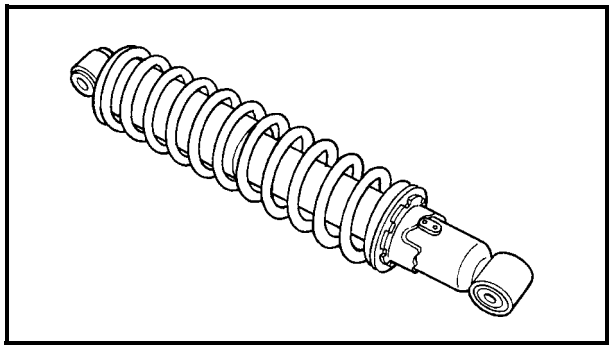

CHECKING THE FRONT SHOCK ABSORBER

1.Check:
- Shock absorber rod
  Bends/damage → Replace the shock absorber assembly.
- Shock absorber assembly
  Oil leaks → Replace the shock absorber assembly.
- Spring
  Fatigue → Replace the shock absorber assembly.
  Move the spring up and down.

Downloaded from www.Manualslib.com manuals search engine

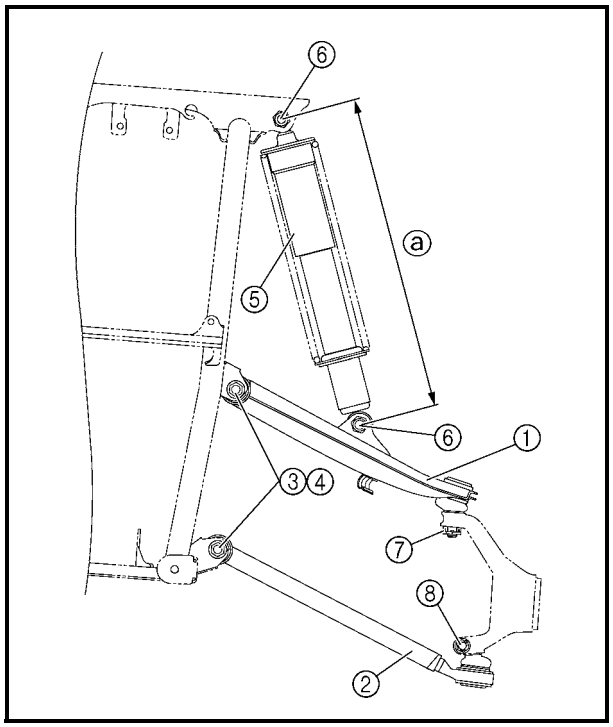

INSTALLING THE FRONT ARMS AND FRONT SHOCK ABSORBER

1.Install:
- Front arms
- Front shock absorber

****

Installation steps:

- Install the front arm (upper) ① and front arm (lower) ②.

NOTE:
- Lubricate the bolts ③ with lithium soap base grease.
- Be sure to position the bolts ③ so that the bolt head faces outward.
- Temporarily tighten the nuts ④.

- Install the front shock absorber ⑤.

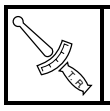	**Nut ⑥:** **45 Nm (4.5 m • kg, 32 ft • lb)**

- Install the ball joints.

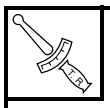	**Nut ⑦:** **25 Nm (2.5 m • kg, 18 ft • lb)** **Nut ⑧:** **48 Nm (4.8 m • kg, 35 ft • lb)**

- Install the new cotter pins.
- Tighten the nuts ④.

NOTE:
Before tightening the nuts ④, adjust the length ⓐ to 324 mm (12.8 in).

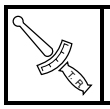	**Nut ④:** **45 Nm (4.5 m • kg, 32 ft • lb)**

****

Downloaded from www.Manualslib.com manuals search engine

REAR KNUCKLE AND STABILIZER

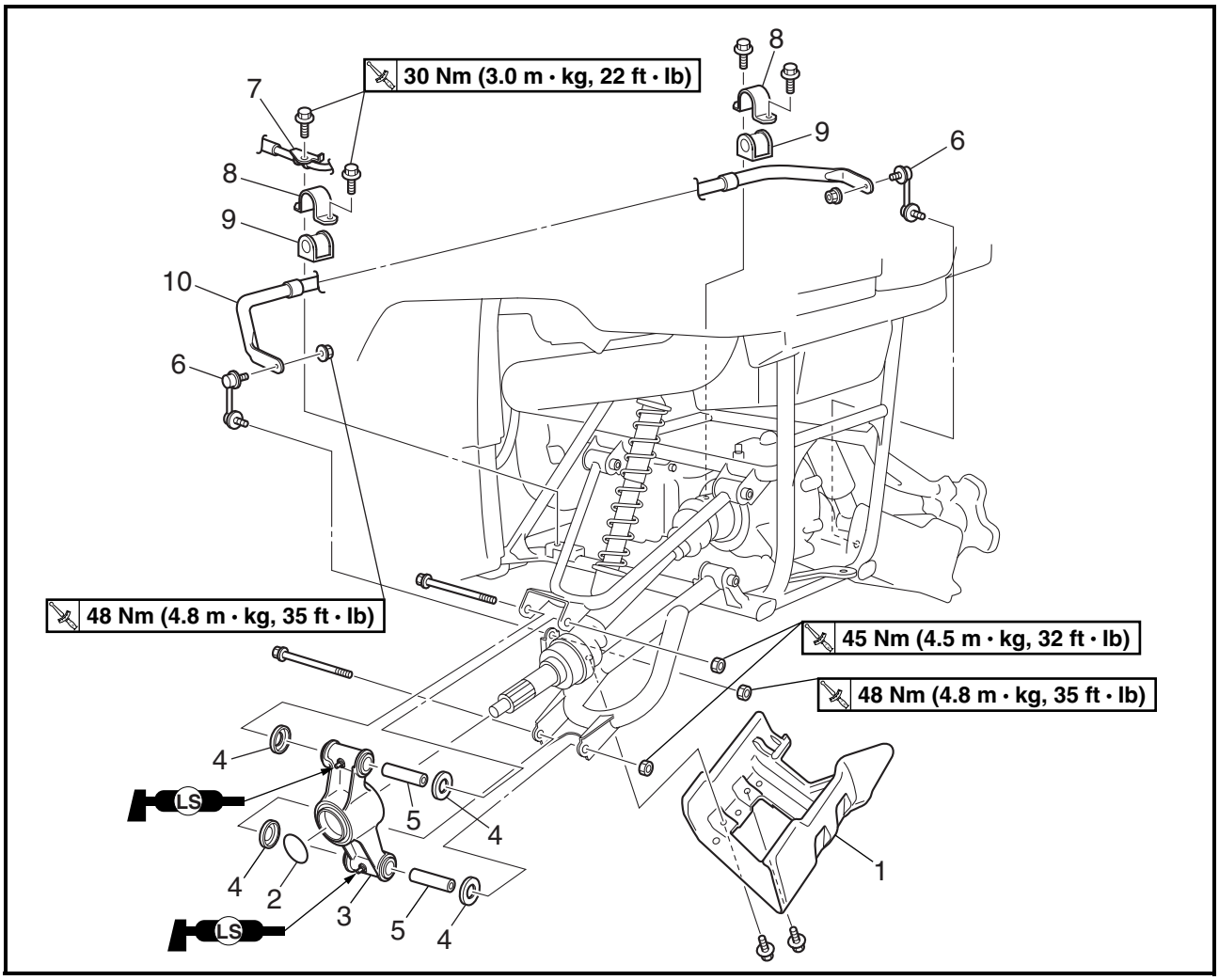

Order	Job name/Part name	Q'ty	Remarks
	Removing the rear knuckle and stabilizer		Remove the parts in the order below.
	Rear wheel hubs		Refer to "REAR WHEELS AND BRAKE DISC".
1	Rear protector	1	
2	O-ring	1	
3	Rear knuckle	1	
4	Spacer cover	4	
5	Spacer	2	
6	Stabilizer joint	2	
7	Brake hose holder	1	
8	Stabilizer holder	2	
9	Bushing	2	
10	Stabilizer	1	
			For installation, reverse the removal procedure.

Downloaded from www.Manualslib.com manuals search engine

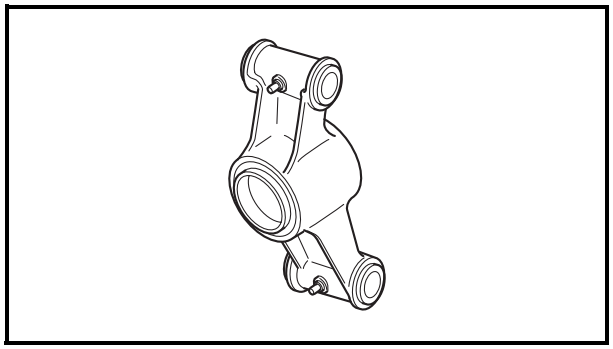

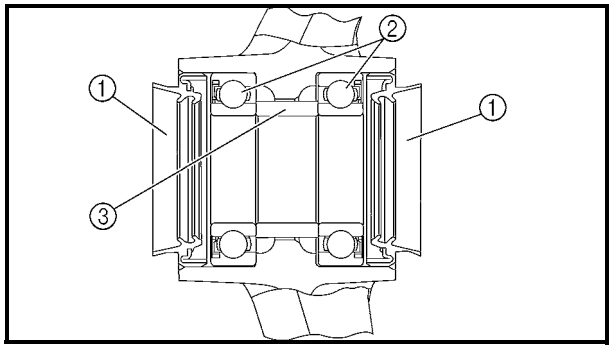

CHECKING THE REAR KNUCKLE

1.Check:
- Rear knuckle
  Damage/pitting → Replace.

2.Check:
- Rear wheel bearings
  Bearings allow play in the wheel hubs or the wheel turns roughly → Replace.
- Oil seals
  Damage → Replace.

****

Replacement steps:
- Clean the outside of the rear knuckle.
- Remove the oil seals ①.
- Drive out the bearings ②.

⚠ WARNING

Eye protection is recommended when using striking tools.

- Remove the spacer ③.
- Apply lithium base grease to the bearings and oil seals.
- Install the spacer to the rear knuckle.
- Install the new bearings.

NOTE:
Install the outside bearing first.

CAUTION:

Do not strike the center race or balls of the bearing. Contact should be made only with the outer race.

- Install a new oil seal.

NOTE:
When installing the oil seals, the “seal side” of the oil seal faces out.

****

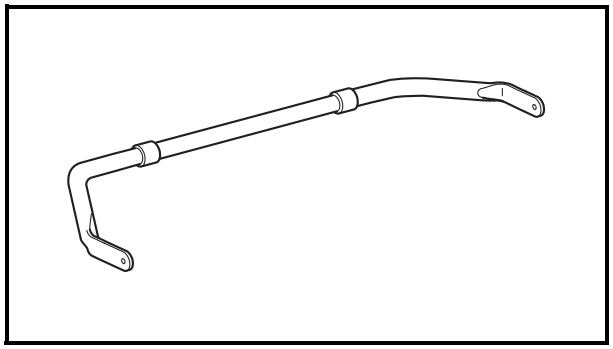

CHECKING THE STABILIZER

1.Check:
- Stabilizer
  Bends/cracks/damage → Replace.

Downloaded from www.Manualslib.com manuals search engine

REAR ARMS AND REAR SHOCK ABSORBER

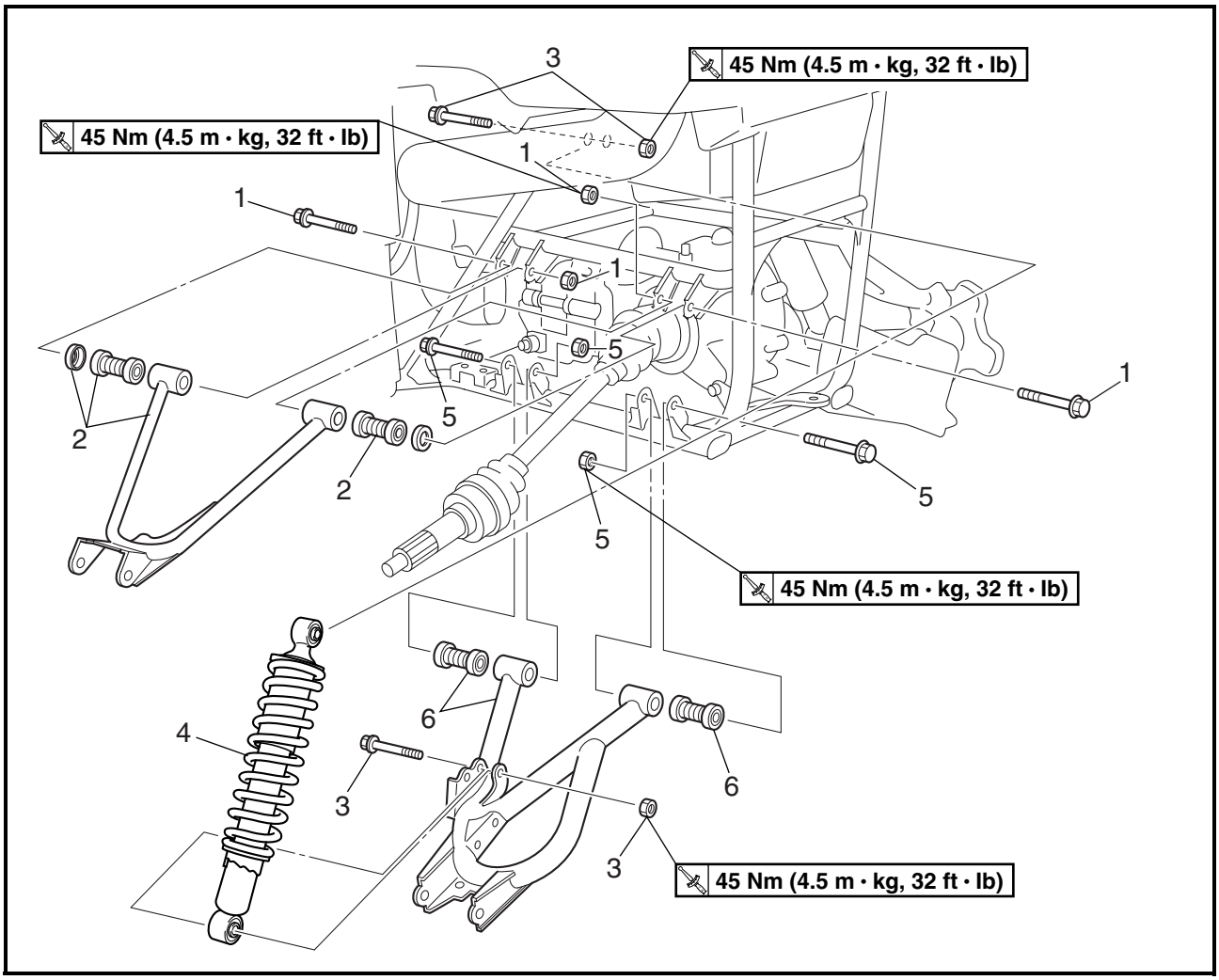

Order	Job name/Part name	Q'ty	Remarks
	Removing the rear arms and rear shock absorber		Remove the parts in the order below.
	Rear protector/rear knuckle/stabilizer		Refer to "REAR KNUCKLE AND STABILIZER".
1	Nut/bolt	2/2	
2	Rear arm (upper)/bushing/washer	1/2/2	
3	Nut/bolt	2/2	
4	Rear shock absorber	1	
5	Nut/bolt	2/2	
6	Rear arm (lower)/bushing	1/2	
			For installation, reverse the removal procedure.

Downloaded from www.Manualslib.com manuals search engine

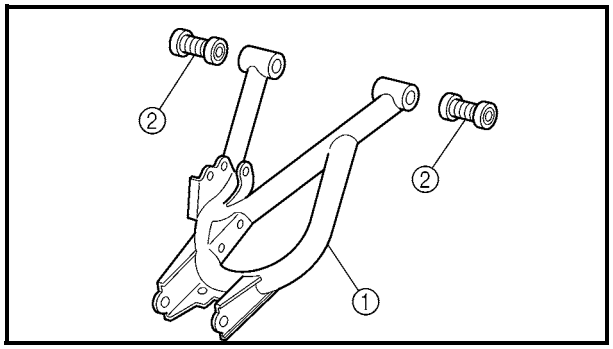

CHECKING THE REAR ARM

1.Check:
- Rear arms ①
  Bends/damage → Replace.

2.Check:
- Bushings ②
  Wear/damage → Replace.

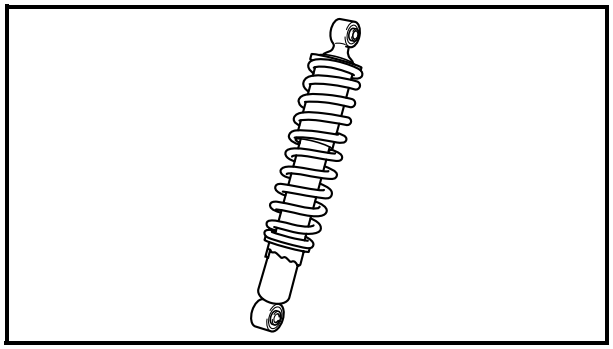

CHECKING THE REAR SHOCK ABSORBER

1.Check:
- Shock absorber rod
  Bends/damage → Replace the shock absorber assembly.
- Shock absorber assembly
  Oil leaks → Replace the shock absorber assembly.
- Spring
  Move the spring up and down.
  Fatigue → Replace the shock absorber assembly.

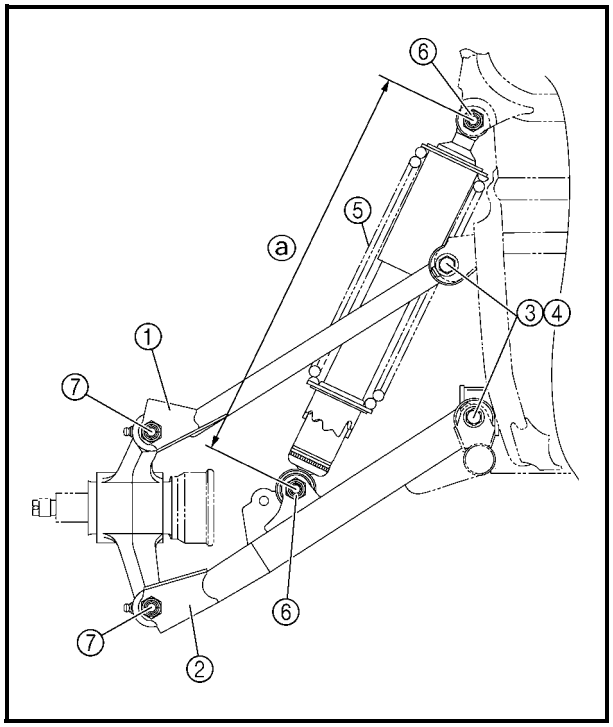

CHECKING THE REAR ARMS AND REAR SHOCK ABSORBER

1.Install:
- Rear arms
- Rear shock absorber

****

Installation steps:
- Install the rear arm (upper) ① and rear arm (lower) ②.

NOTE:
- Lubricate the bolts ③ with lithium soap base grease.
- Be sure to position the bolts ③ so that the bolt head faces outward.
- Temporarily tighten the nuts ④.

Downloaded from www.Manualslib.com manuals search engine

- Install the rear shock absorber ⑤.

	Nut ⑥: **45 Nm (4.5 m • kg, 32 ft • lb)**

- Install the rear knuckle.

	Nut ⑦: **45 Nm (4.5 m • kg, 32 ft • lb)**

- Tighten the nuts ④.

NOTE:
Before tightening the nuts ④, adjust the length ⓐ to 334 mm (13.1 in).

	Nut ④: **45 Nm (4.5 m • kg, 32 ft • lb)**

****

Downloaded from www.Manualslib.com manuals search engine

EB800000

ELECTRICAL

ELECTRICAL COMPONENTS

① Main switch
② Diode
③ Thermo switch 1
④ Front brake light switch
⑤ Rear brake switch
⑥ Fuel sender
⑦ Battery
⑧ Circuit breaker (fan)
⑨ Fuse box
⑩ Four-wheel drive relay 3
⑪ Four-wheel drive relay 2
⑫ Four-wheel drive relay 1
⑬ CDI unit
⑭ Starter relay
⑮ Main fuse
⑯ Rectifier/regulator
⑰ Speed sensor
⑱ Reverse switch
⑲ Gear position switch
⑳ Gear motor
㉑ Rear brake light switch
㉒ Thermo switch 2
㉓ Fan
㉔ Ignition coil

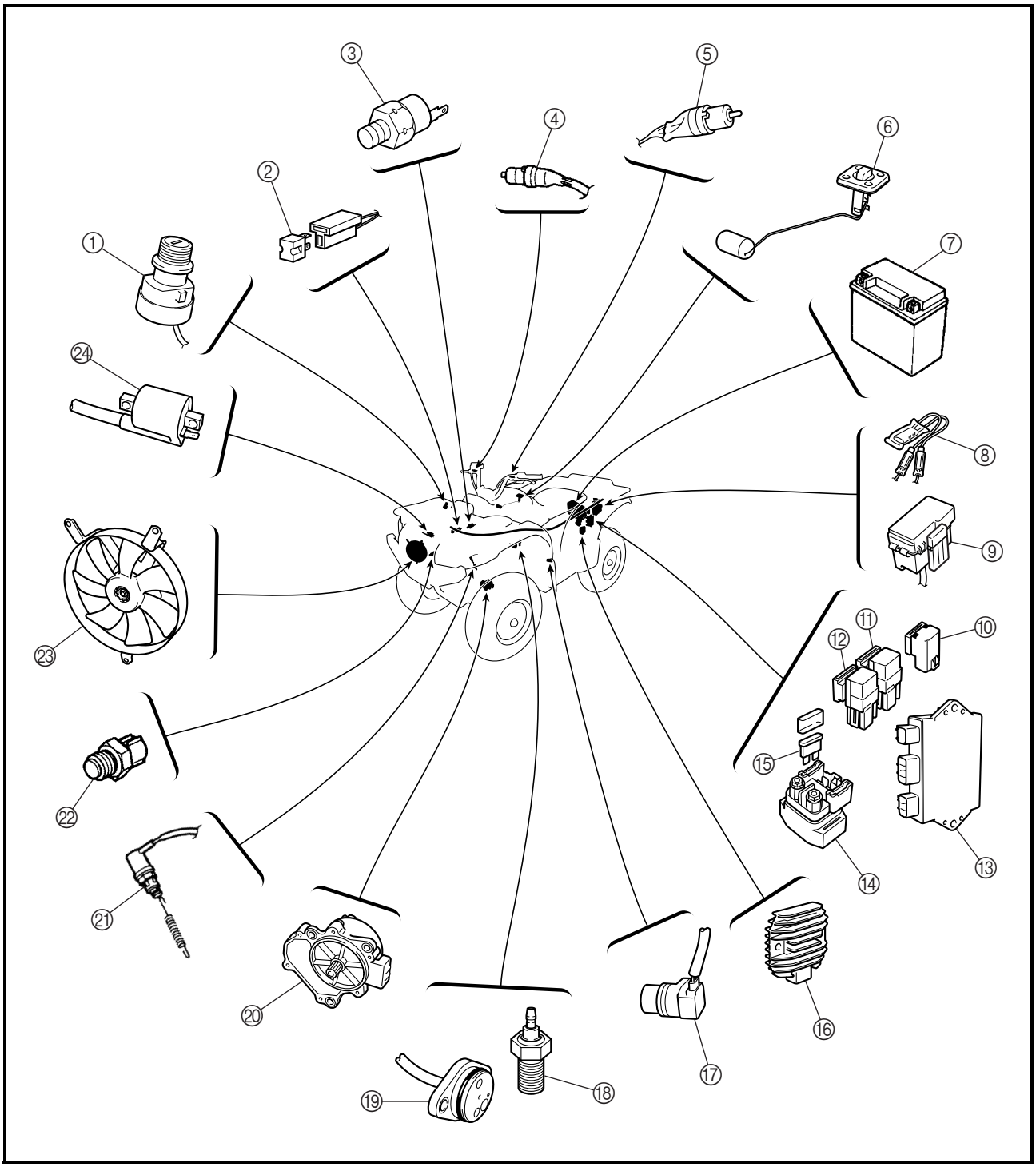

Downloaded from www.Manualslib.com manuals search engine

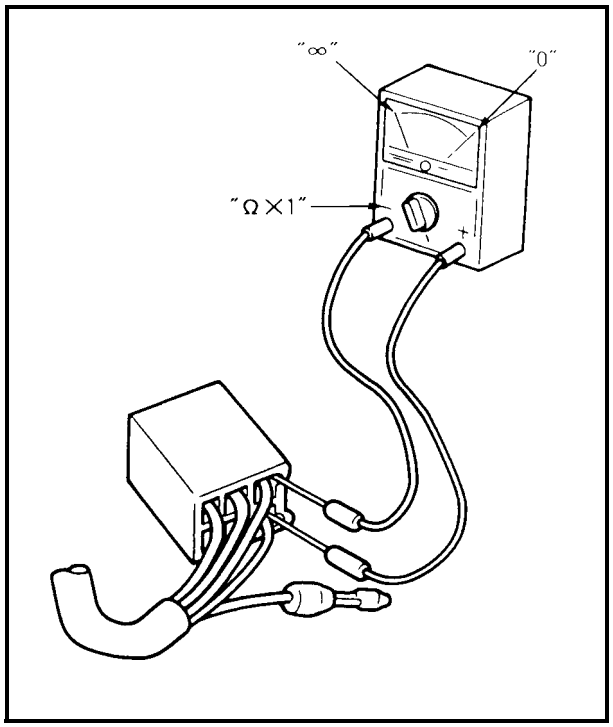

CHECKING THE SWITCH

CHECKING THE SWITCH

Use a pocket tester to check the terminals for continuity. If the continuity is faulty at any point, replace the switch.

Pocket tester:
P/N. YU-03112, 90890-03112

NOTE:

- Set the pocket tester to "0" before starting the test.
- The pocket tester should be set to the "Ω × 1" range when testing the switch for continuity.
- Turn the switch on and off a few times when checking it.

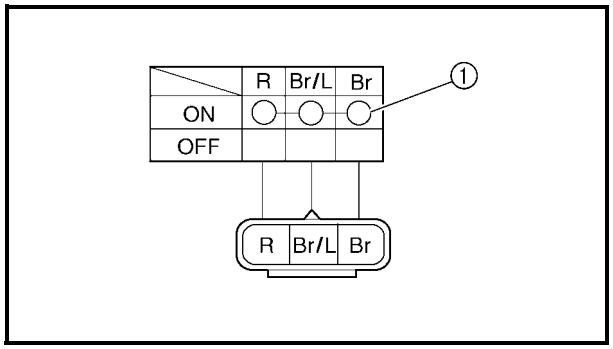

CHECKING A SWITCH SHOWN IN THE MANUAL

The terminal connections for switches (main switch, handlebar switch, engine stop switch, light switch, etc.) are shown in a chart similar to the one on the left.

This chart shows the switch positions in the column and the switch lead colors in the top row.

For each switch position, "○——○" indicates the terminals with continuity.

The example chart shows that:

① There is continuity between the "Red, Brown/Blue, and Brown" leads when the switch is set to "ON".

Downloaded from www.Manualslib.com manuals search engine

Downloaded from www.Manualslib.com manuals search engine

CHECKING THE SWITCH CONTINUITY

Refer to “CHECKING THE SWITCH” and check for continuity between lead terminals.
Poor connection, no continuity → Correct or replace.
* The coupler locations are circled.

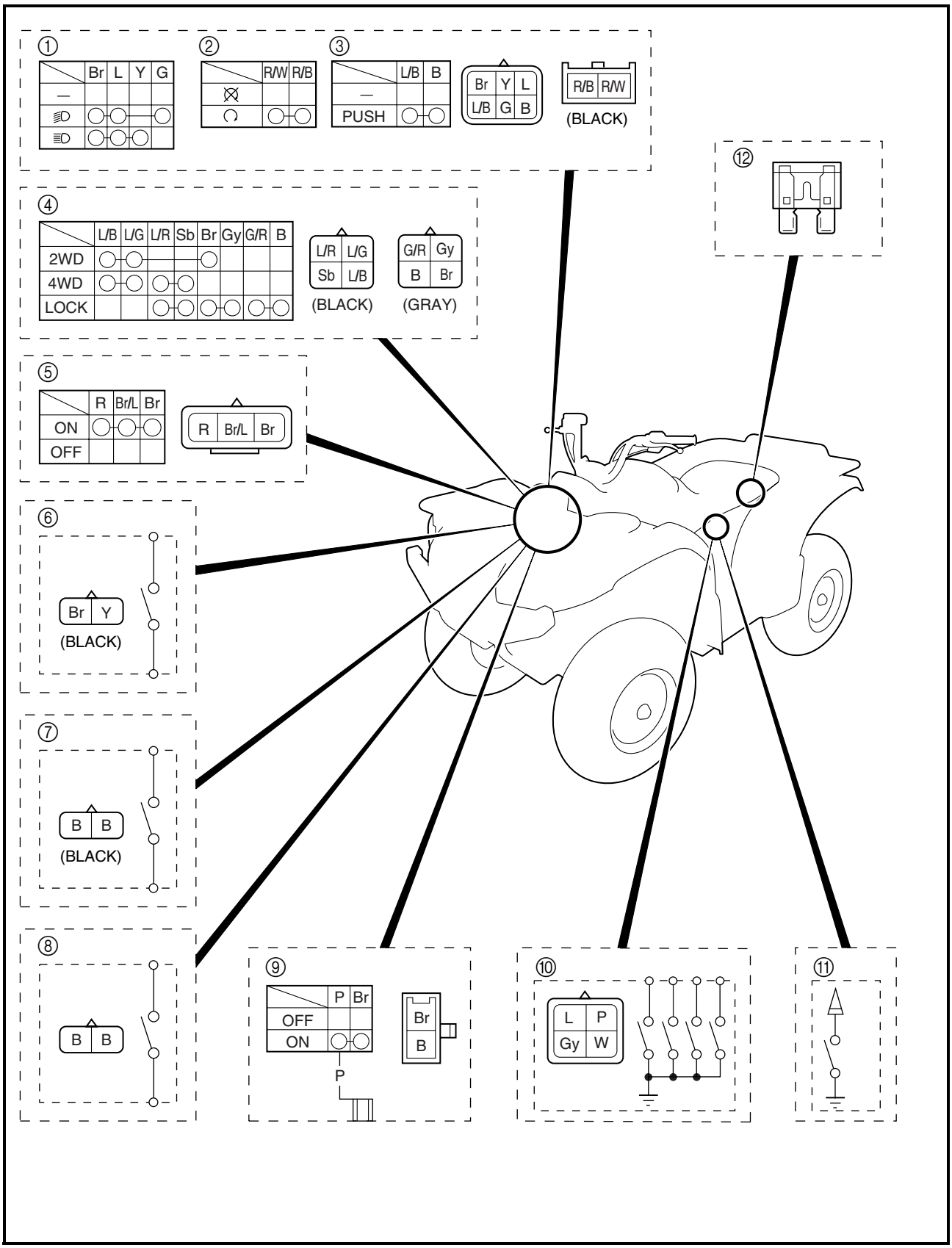

Downloaded from www.Manualslib.com manuals search engine

① Light switch
② Engine stop switch
③ Start switch
④ On-command four-wheel drive switch and differential gear lock switch
⑤ Main switch
⑥ Rear brake light switch
⑦ Front brake light switch
⑧ Rear brake switch
⑨ Horn switch (for Europe and Oceania)
⑩ Gear position switch
⑪ Reverse switch
⑫ Fuse

Downloaded from www.Manualslib.com manuals search engine

EB801020

CHECKING THE BULBS AND BULB SOCKETS

Check each bulb and bulb socket for damage or wear, proper connections, and also for continuity between the terminals.

Damage/wear → Repair or replace the bulb, bulb socket or both.

Improperly connected → Properly connect.

Incorrect continuity reading → Repair or replace the bulb, bulb socket or both.

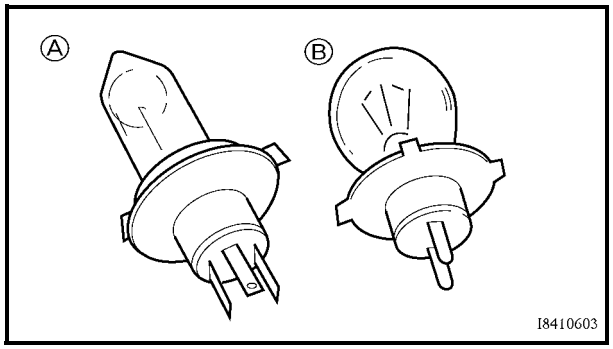

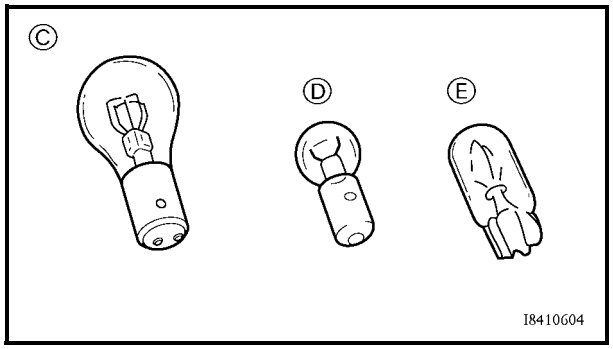

TYPES OF BULBS

The bulbs used on this motorcycle are shown in the illustration on the left.

- Bulbs Ⓐ and Ⓑ are used for headlights and usually use a bulb holder which must be detached before removing the bulb. The majority of these bulbs can be removed from their respective socket by turning them counterclockwise.
- Bulb Ⓒ is used for turn signal and brake/tail lights and can be removed from the socket by pushing and turning the bulb counterclockwise.
- Bulbs Ⓓ and Ⓔ are used for meter and indicator lights and can be removed from their respective socket by carefully pulling them out.

CHECKING THE CONDITION OF THE BULBS

The following procedure applies to all of the bulbs.

1.Remove:

- Bulb

Downloaded from www.Manualslib.com manuals search engine

WARNING

Since the headlight bulb gets extremely hot, keep flammable products and your hands away from the bulb until it has cooled down.

CAUTION:

- **Be sure to hold the socket firmly when removing the bulb. Never pull the lead, otherwise it may be pulled out of the terminal in the coupler.**
- **Avoid touching the glass part of the headlight bulb to keep it free from oil, otherwise the transparency of the glass, the life of the bulb and the luminous flux will be adversely affected. If the headlight bulb gets soiled, thoroughly clean it with a cloth moistened with alcohol or lacquer thinner.**

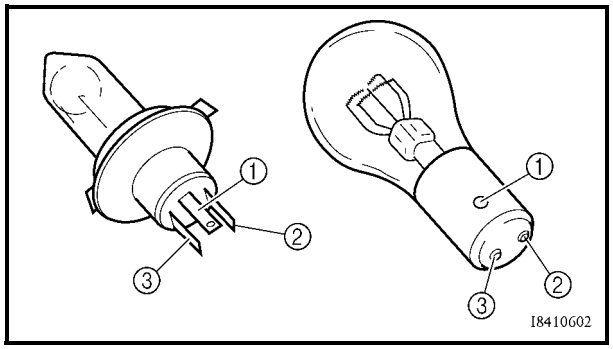

2.Check:
- Bulb (for continuity)
  (with the pocket tester)
  No continuity → Replace.

	Pocket tester **P/N. YU-03112, 90890-03112**

NOTE:
Before checking for continuity, set the pocket tester to “0” and to the “Ω × 1” range.

****

a.Connect the tester positive probe to terminal ① and the tester negative probe to terminal ②, and check the continuity.
b.Connect the tester positive probe to terminal ① and the tester negative probe to terminal ③, and check the continuity.
c.If either of the readings indicate no continuity, replace the bulb.

****

Downloaded from www.Manualslib.com manuals search engine

CHECKING THE CONDITION OF THE BULB SOCKETS

The following procedure applies to all of the bulb sockets.

1.Check:

- Bulb socket (for continuity)
  (with the pocket tester)
  No continuity → Replace.

	Pocket tester: **P/N. YU-03112, 90890-03112**

NOTE:

Check each bulb socket for continuity in the same manner as described in the bulb section; however, note the following.

****

a.Install a good bulb into the bulb socket.

b.Connect the pocket tester probes to the respective leads of the bulb socket.

c.Check the bulb socket for continuity. If any of the readings indicate no continuity, replace the bulb socket.

****

CHECKING THE LEDs

The following procedure applies to all of the LEDs.

1.Check:
LED (for proper operation)

****

a.Disconnect the meter assembly coupler (meter assembly side).

b.Connect two jumper leads from the battery terminals to the respective coupler terminals as shown.

⚠ WARNING

- **A wire that is used as a jumper lead must have at least the same capacity of the battery lead, otherwise the jumper lead may burn.**
- **This check is likely to produce sparks, therefore make sure that no flammable gas or fluid is in the vicinity.**

c.When the jumper leads are connected to the terminals the respective LED should illuminate.
Does not light → Replace the meter assembly.

****

Downloaded from www.Manualslib.com manuals search engine

EB802000

IGNITION SYSTEM

CIRCUIT DIAGRAM

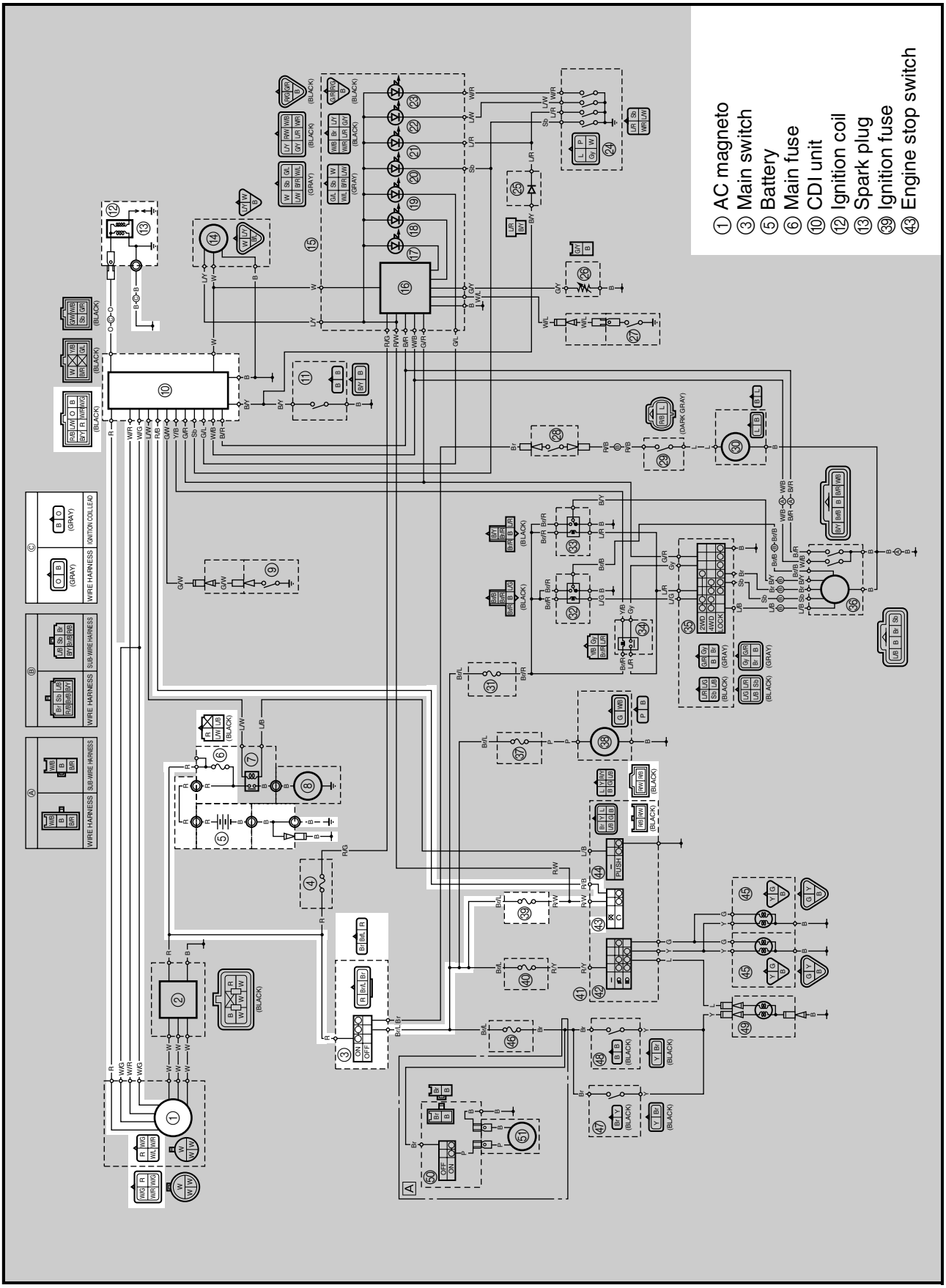

Downloaded from www.Manualslib.com manuals search engine

EB802010
TROUBLESHOOTING

IF THE IGNITION SYSTEM FAILS TO OPERATE (NO SPARK OR INTERMITTENT SPARK):

Procedure

Check:
1. Fuse (main, ignition)
2. Battery
3. Spark plug
4. Ignition spark gap
5. Spark plug cap resistance
6. Ignition coil resistance
7. Engine stop switch
8. Main switch
9. Pickup coil resistance
10. Charging/rotor rotation direction detection coil resistance
11. Wiring connection (the entire ignition system)

NOTE:
- Remove the following part(s) before troubleshooting:
  1) Seat
  2) Fuel tank side panels
  3) Front carrier
  4) Front fender
- Use the following special tool(s) for troubleshooting.

Dynamic spark tester:
P/N. YM-34487
Ignition checker:
P/N. 90890-06754
Pocket tester:
P/N. YU-03112, 90890-03112

EB802011

1.Fuse (main, ignition)	NO CONTINUITY → Replace the fuse.
Refer to “CHECKING THE SWITCH”.	

↓ CONTINUITY

EB802012

2.Battery	INCORRECT →
• Check the battery condition. Refer to “CHECKING THE BATTERY” in CHAPTER 3.	• Clean the battery terminals. • Recharge or replace the battery.
Open-circuit voltage: **12.8 V or more at 20 °C (68 °F)**	

↓ CORRECT

3.Spark plug	**Standard spark plug:** **DPR8EA-9/NGK**
• Check the spark plug condition. • Check the spark plug type. • Check the spark plug gap. Refer to “CHECKING THE SPARK PLUG” in CHAPTER 3.	

Downloaded from www.Manualslib.com manuals search engine

Spark plug gap:
0.8 ~ 0.9 mm (0.03 ~ 0.04 in)

INCORRECT

Repair or replace the spark plug.

CORRECT

4.Ignition spark gap

- Disconnect the spark plug cap from the spark plug.
- Connect the dynamic spark tester ① as shown.

② Spark plug cap
③ Spark plug

- Turn the main switch to “ON”.
- Check the ignition spark gap.
- Crank the engine by pushing the starter switch, and increase the spark gap until a misfiring occurs.

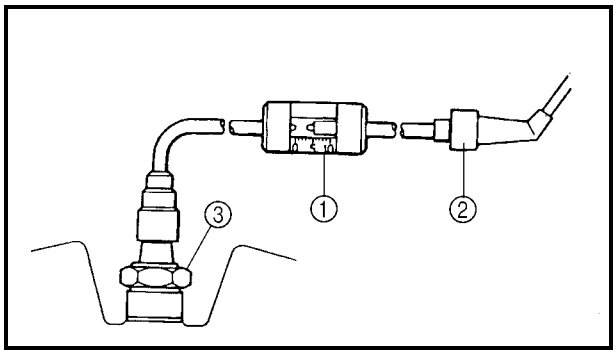

Minimum spark gap:
6.0 mm (0.24 in)

MEETS SPECIFICATION

The ignition system is not faulty.

OUT OF SPECIFICATION OR NO SPARK

5.Spark plug cap resistance

- Remove the spark plug cap.
- Connect the pocket tester (Ω × 1k) to the spark plug cap.

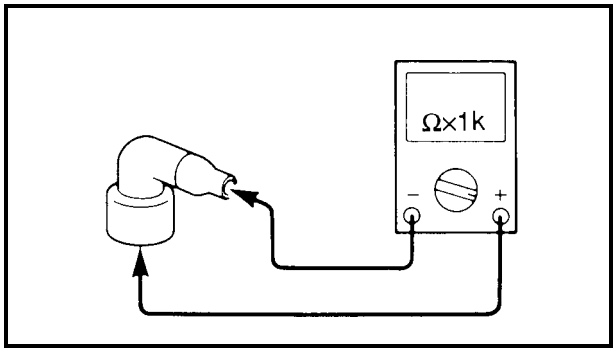

- Check that the spark plug cap has the specified resistance.

Spark plug cap resistance:
10 kΩ at 20 °C (68 °F)

OUT OF SPECIFICATION

Replace the spark plug cap.

MEETS SPECIFICATION

*

Downloaded from www.Manualslib.com manuals search engine

*

6.Ignition coil resistance
• Disconnect the ignition coil connector from the wire harness. • Connect the pocket tester (Ω × 1) to the ignition coil.
Tester (+) lead → Orange lead terminal **Tester (–) lead → Ignition coil base**
• Check that the primary coil has the specified resistance.
Primary coil resistance: **0.18 ~ 0.28 Ω at 20 °C (68 °F)**

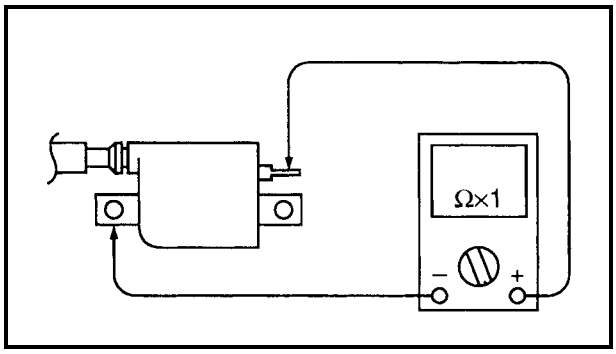

• Connect the pocket tester (Ω × 1k) to the ignition coil.
Tester (+) lead → Orange lead terminal **Tester (–) lead → Spark plug lead**
• Check that the secondary coil has the specified resistance.
Secondary coil resistance: **6.32 ~ 9.48 kΩ at 20 °C (68 °F)**

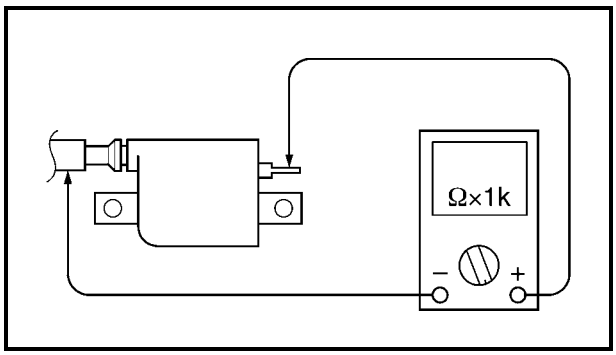

OUT OF SPECIFICATION

Replace the ignition coil.

BOTH MEET SPECIFICATION

7.Engine stop switch
Refer to “CHECKING THE SWITCH”.

INCORRECT

Replace the handlebar switch (left).

CORRECT

*

Downloaded from www.Manualslib.com manuals search engine

*

8.Main switch

Refer to “CHECKING THE SWITCH”.

INCORRECT → Replace the main switch.

CORRECT

9.Pickup coil resistance

- Disconnect the AC magneto coupler from the wire harness.
- Connect the pocket tester (Ω × 100) to the pickup coil terminal.

Tester (+) lead → White/Red terminal ①
Tester (–) lead → White/Green terminal ②

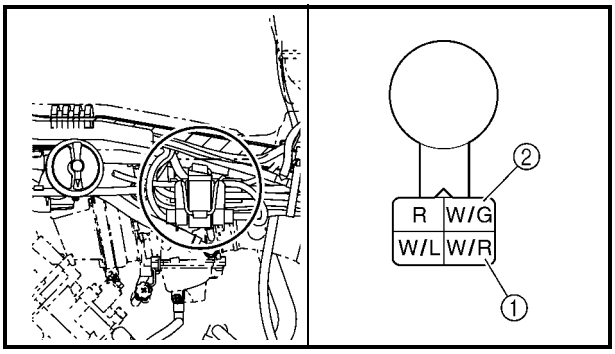

- Check the pickup coil for the specified resistance.

Pickup coil resistance:
459 ~ 561 Ω at 20 °C (68 °F)
(White/Red – White/Green)

OUT OF SPECIFICATION → Replace the pickup coil/stator assembly.

MEETS SPECIFICATION

10.Charging/rotor rotation direction detection coil resistance

- Disconnect the AC magneto coupler from the wire harness.
- Connect the pocket tester (Ω × 100) to the charging/rotor rotation direction detection coil terminal.

Tester (+) lead → Red terminal ①
Tester (–) lead → White/Blue terminal ②

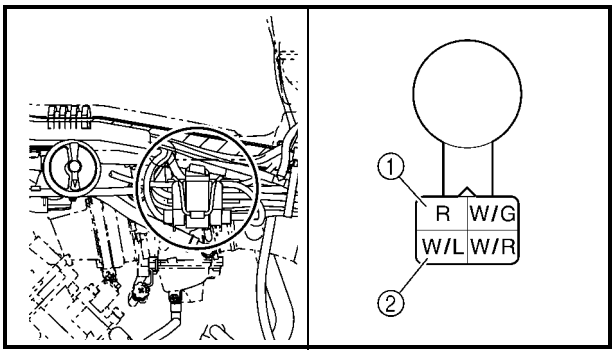

- Check the charging/rotor rotation direction detection coil for the specified resistance.

Rotor rotation direction sensing coil resistance:
0.063 ~ 0.077 Ω at 20 °C (68 °F)
(Red – White/Blue)

OUT OF SPECIFICATION → Replace the pickup coil/stator assembly.

MEETS SPECIFICATION

*

Downloaded from www.Manualslib.com manuals search engine

*

11.Wiring connection

- Check the connections of the entire ignition system.
  Refer to “CIRCUIT DIAGRAM”.

POOR CONNECTION → Properly connect the ignition system.

CORRECT → Replace the CDI unit.

Downloaded from www.Manualslib.com manuals search engine

EB803000

ELECTRIC STARTING SYSTEM

CIRCUIT DIAGRAM

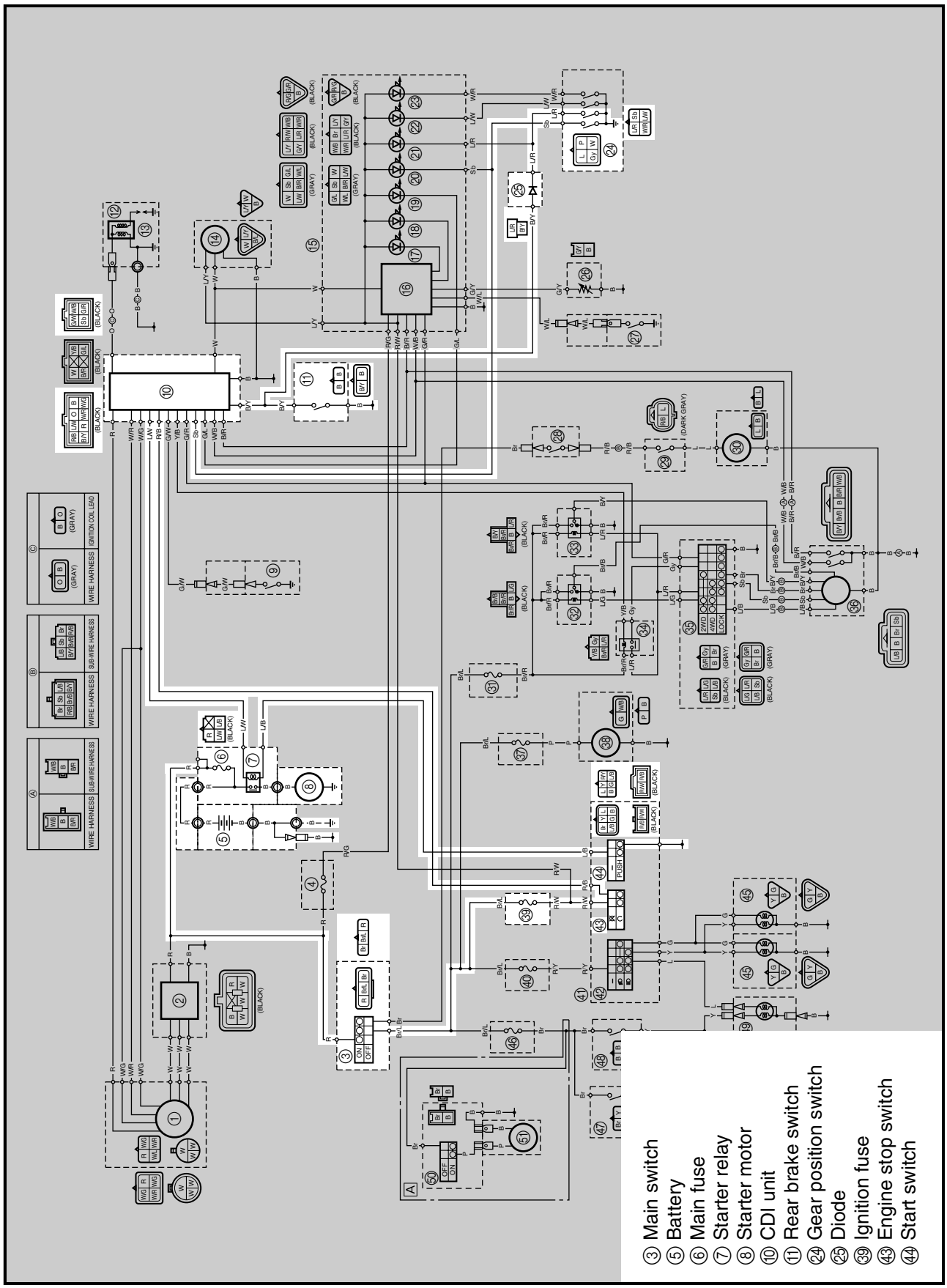

Downloaded from www.Manualslib.com manuals search engine

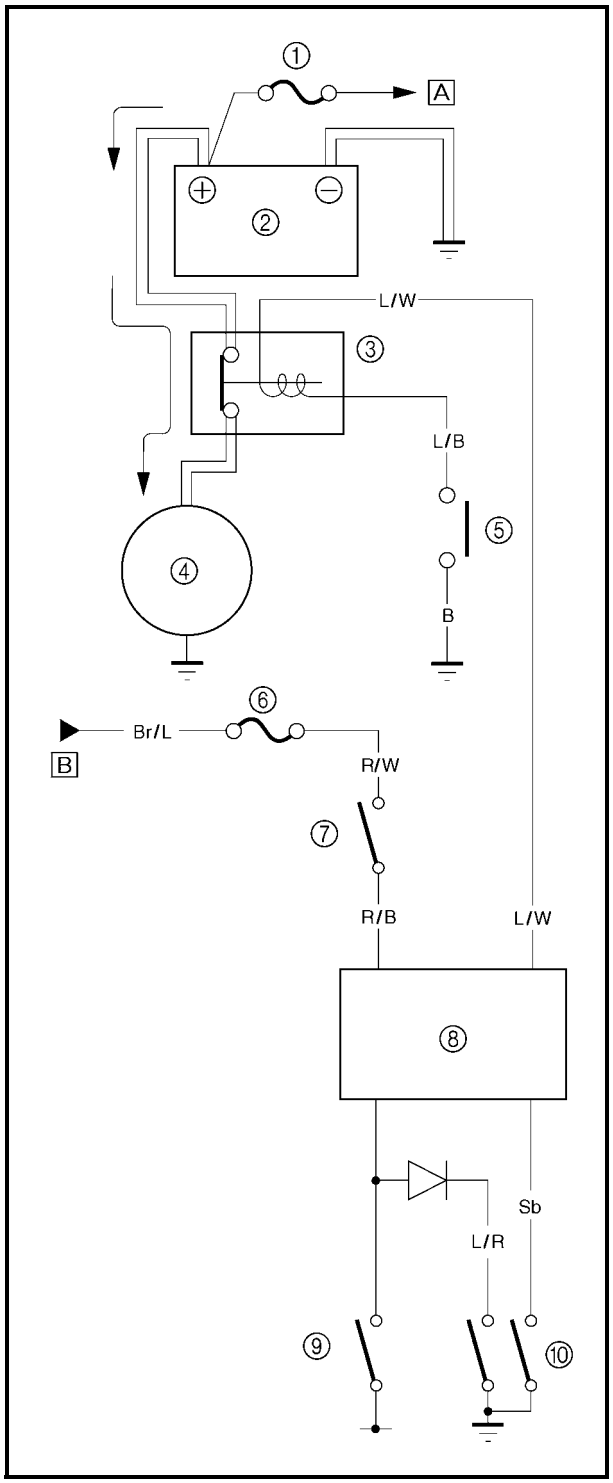

STARTING CIRCUIT OPERATION

The starting circuit on this model consists of the starter motor, starter relay, rear brake switch, rear brake switch CDI unit and gear position switch. If the main switch is on and the engine stop switch is in the RUN position, the starter motor can be operated only if:

- The transmission is in neutral (the neutral switch is closed).

or

- The transmission is in park (the rear brake switch is closed).
- The rear brake lever is pulled (the rear brake switch is closed).

① Main fuse
② Battery
③ Starter relay
④ Starter motor
⑤ Start switch
⑥ Ignition fuse
⑦ Engine stop switch
⑧ CDI unit
⑨ Rear brake switch
⑩ Gear position switch
A TO MAIN SWITCH
B FROM MAIN SWITCH

Downloaded from www.Manualslib.com manuals search engine

EB803020
TROUBLESHOOTING

IF THE STARTER MOTOR FAILS TO OPERATE:

Procedure

Check:
1. Fuse (main, ignition)
2. Battery
3. Starter motor
4. Starter relay
5. Main switch
6. Engine stop switch
7. Gear position switch
8. Rear brake switch
9. Start switch
10. Diode
11. Wiring connection (the entire starting system)

NOTE:
- Remove the following part(s) before troubleshooting:
  1) Seat
  2) Fuel tank side panels
  3) Fuel tank
  4) Air cleaner case
  5) Front carrier
  6) Front fender panel
- Use the following special tool(s) for troubleshooting.

Pocket tester:
P/N. YU-03112, 90890-03112

EB802011

1.Fuse (main, ignition)
Refer to “CHECKING THE SWITCH”.

NO CONTINUITY → Replace the fuse.

CONTINUITY ↓

EB802012

2.Battery
• Check the battery condition. Refer to “CHECKING THE BATTERY” in CHAPTER 3.
Open-circuit voltage: **12.8 V or more at 20 °C (68 °F)**

INCORRECT →
- Clean the battery terminals.
- Recharge or replace the battery.

CORRECT ↓

*

Downloaded from www.Manualslib.com manuals search engine

*

3.Starter motor

- Connect the battery positive terminal ① and starter motor cable ② using a jumper lead ③ *.
- Check the operation of the starter motor.

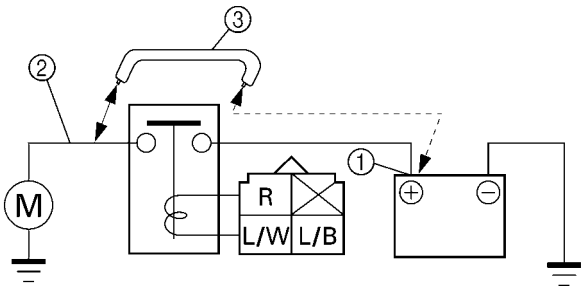

*

⚠ WARNING

- **A wire that is used as a jumper lead must have the equivalent capacity or more as that of the battery lead, otherwise the jumper lead may burn.**
- **This check is likely to produce sparks, so be sure that no flammable gas or fluid is in the vicinity.**

DOES NOT TURN

Repair or replace the starter motor.

TURNS

4.Starter relay

- Remove the starter relay from the wire harness.
- Connect the pocket tester (Ω × 1) and the battery (12 V) to the starter relay terminals.

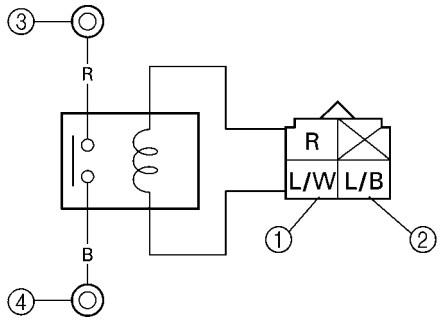

Battery (+) terminal → **Blue/White terminal** ①
Battery (–) terminal → **Blue/Black terminal** ②

Tester (+) lead → **Red terminal** ③
Tester (–) lead → **Black terminal** ④

- Check the starter relay for continuity.

NO CONTINUITY

Replace the starter relay.

CONTINUITY

*

Downloaded from www.Manualslib.com manuals search engine

*

5.Main switch

Refer to “CHECKING THE SWITCH”.

INCORRECT → Replace the main switch.

CORRECT

6.Engine stop switch

Refer to “CHECKING THE SWITCH”.

INCORRECT → Replace the handlebar switch (right).

CORRECT

7.Gear position switch

Refer to “CHECKING THE SWITCH”.

INCORRECT → Replace the gear position switch.

CORRECT

8.Rear brake switch

Refer to “CHECKING THE SWITCH”.

INCORRECT → Replace the rear brake switch.

CORRECT

*

Downloaded from www.Manualslib.com manuals search engine

*

9.Start switch
Refer to “CHECKING THE SWITCH”.

INCORRECT

Replace the handlebar switch (left).

CORRECT

10.Diode	
• Remove the diode from the coupler. • Connect the pocket tester (Ω × 1) to the diode terminals as shown. • Check the diode for continuity as follows.	
Tester positive probe → **Blue/Red ①** **Tester negative probe →** **Black/Yellow ②**	**Continuity**
Tester positive probe → **Black/Yellow ②** **Tester negative probe →** **Blue/Red ①**	**No continuity**

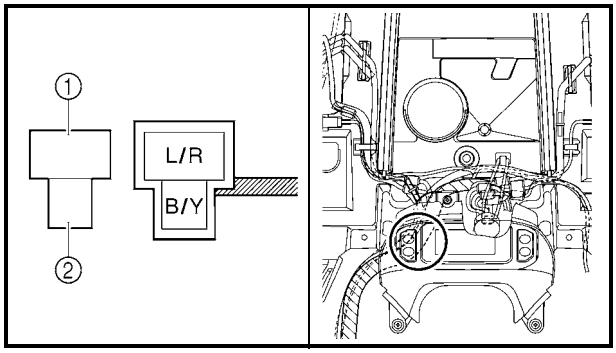

NOTE:
When you switch the tester’s positive and negative probes, the readings in the left chart will be reversed.

INCORRECT

Replace the diode.

CORRECT

EB803028

11.Wiring connection
• Check the connections of the entire starting system. Refer to “CIRCUIT DIAGRAM”.

POOR CONNECTION

Properly connect the starting system.

Downloaded from www.Manualslib.com manuals search engine

STARTER MOTOR

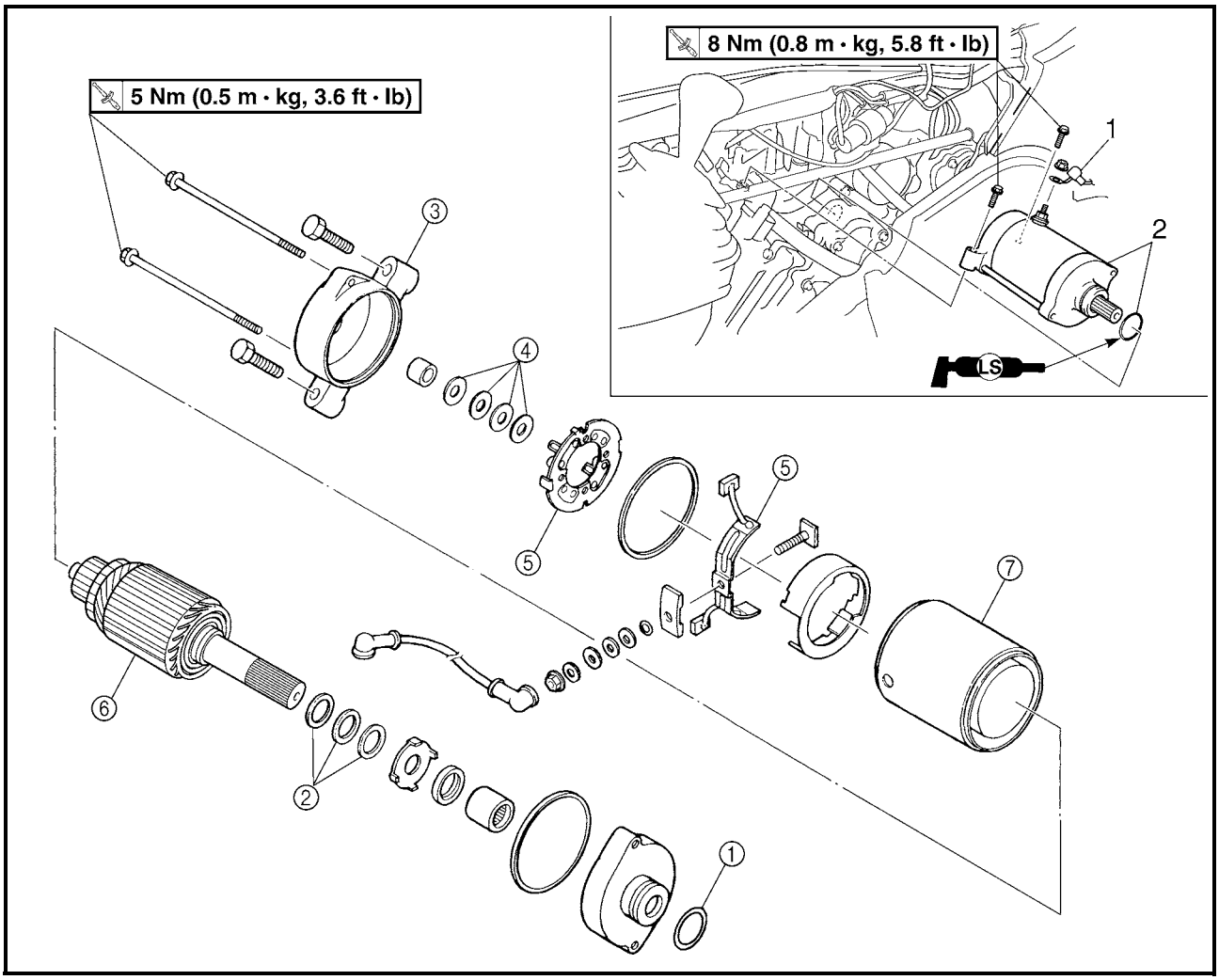

Order	Job name/Part name	Q'ty	Remarks
	Removing the starter motor		Remove the parts in the order below.
1	Starter motor lead	1	
2	Starter motor/O-ring	1/1	
	Disassembling the starter motor		Remove the parts in the order below.
①	Bracket 1	1	Refer to "ASSEMBLING THE STARTER MOTOR".
②	Washer kit		
③	Bracket 2	1	
④	Shims		
⑤	Brush seat 1/brush seat 2	1/2	
⑥	Armature coil	1	
⑦	Yoke	1	
			For assembly, reverse the disassembly procedure.

Downloaded from www.Manualslib.com manuals search engine

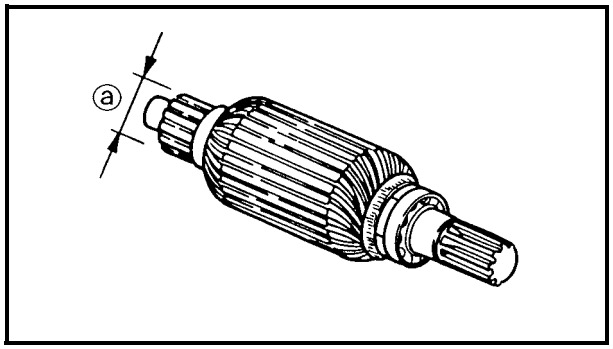

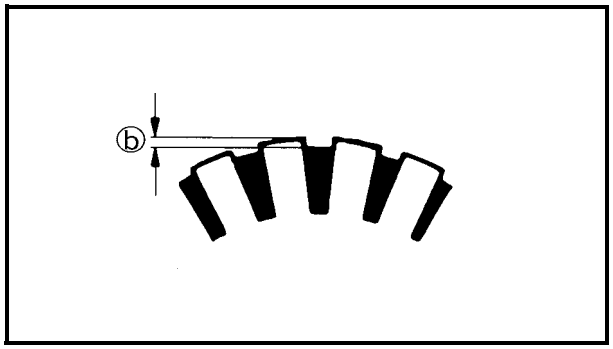

CHECKING THE STARTER MOTOR

1.Inspect:
- Commutator
  Dirty → Clean it with #600 grit sandpaper.

2.Measure:
- Commutator diameter ⓐ
  Out of specification → Replace the starter motor.

Outside diameter:
28 mm (1.10 in)
<Wear limit:>
27 mm (1.06 in)

3.Measure:
- Mica undercut ⓑ
  Out of specification → Scrape the mica using a hacksaw blade.

Mica undercut:
0.7 mm (0.03 in)

NOTE:
Scrape the mica to the proper measurement using a hacksaw blade which has been grounded to fit the commutator.

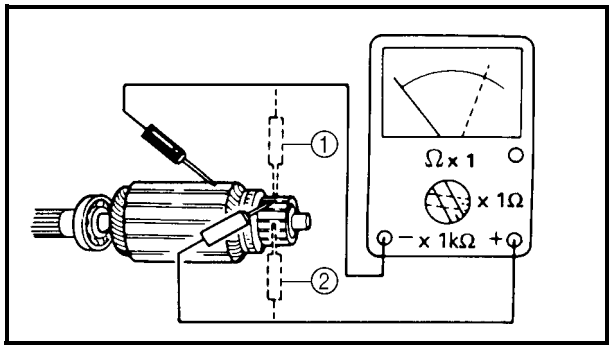

4.Inspect:
- Armature coil (insulation/continuity)
  Defects → Replace the starter motor.

****

Inspection steps:
- Connect the pocket tester for the continuity check ① and insulation check ②.
- Measure the armature resistances.

Armature coil resistance:
Continuity check ①:
0.025 ~ 0.035 Ω at 20 °C (68 °F)
Insulation check ②:
More than 1 MΩ at 20 °C (68 °F)

- If the resistance is incorrect, replace the starter motor.

****

Downloaded from www.Manualslib.com manuals search engine

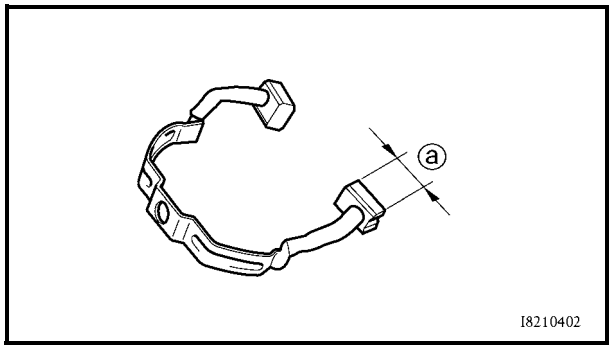

5.Measure:
- Brush length ⓐ (each)
  Out of specification → Replace the brush.

Brush length:
12.5 mm (0.49 in)
<Wear limit:>
5 mm (0.20 in)

6.Measure:
- Brush spring force
  Fatigue/out of specification → Replace as a set.

Brush spring force:
7.65 ~ 10.01 Nm
(780 ~ 1,020 g, 27.5 ~ 36.0 oz)

7.Inspect:
- Oil seal
- Bushing
- O-rings
  Wear/damage → Replace.

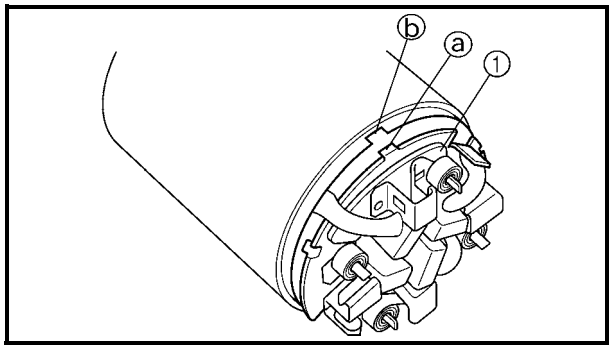

ASSEMBLING THE STARTER MOTOR

1.Install:
- Brush seat 1 ①

NOTE:
Align the projection ⓐ on the brush seat 1 with the slot ⓑ on the yoke.

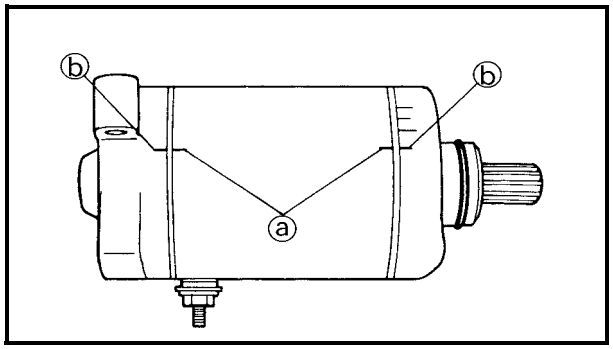

2.Install:
- Yoke
- Brackets

NOTE:
Align the match marks ⓐ on the yoke with the match marks ⓑ on the brackets.

Downloaded from www.Manualslib.com manuals search engine

EB804000

CHARGING SYSTEM

CIRCUIT DIAGRAM

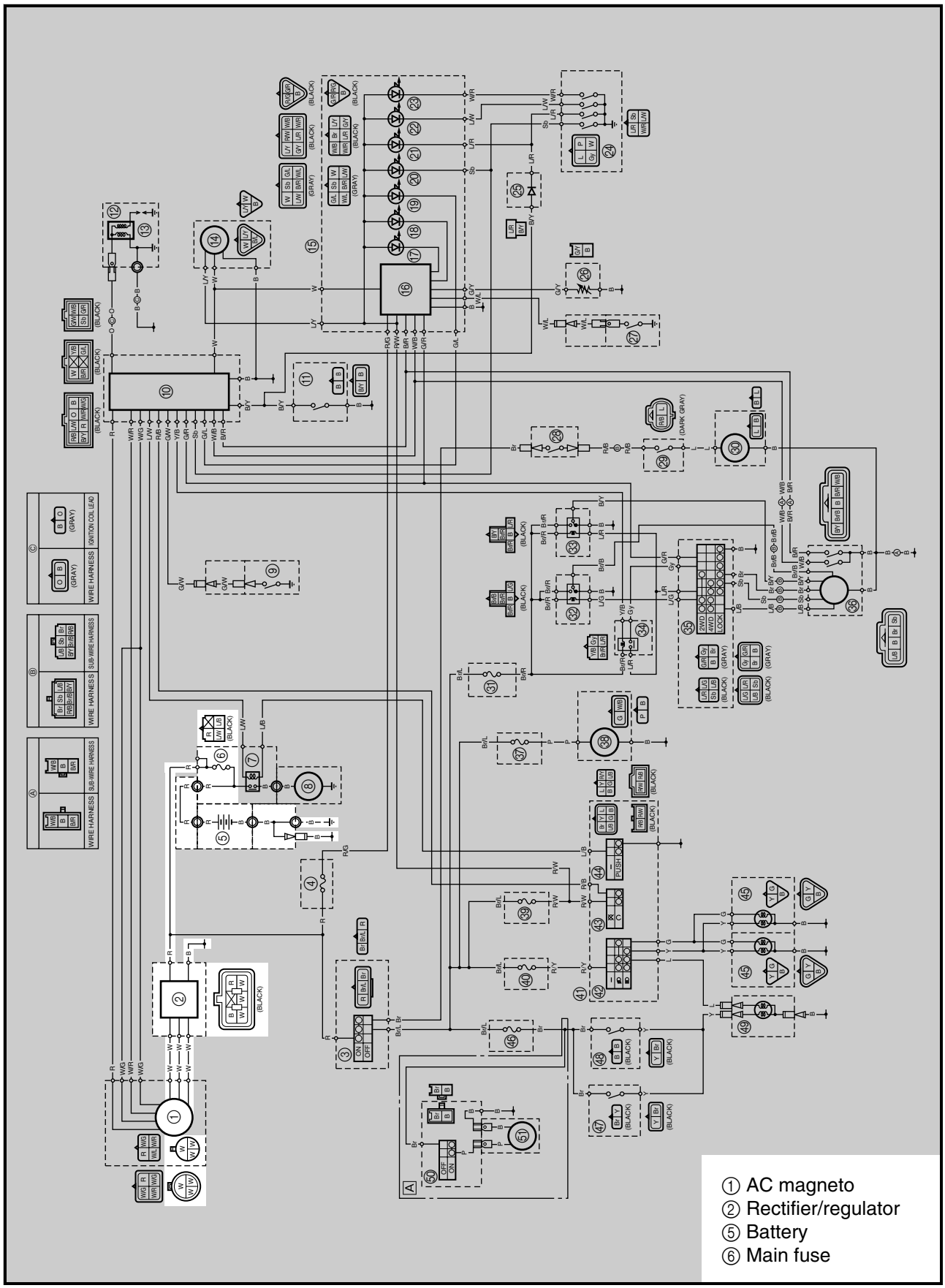

Downloaded from www.Manualslib.com manuals search engine

EB804010
TROUBLESHOOTING

IF THE BATTERY IS NOT CHARGED:

Procedure

Check:
1. Fuse (main)
2. Battery
3. Charging voltage
4. Charging coil resistance
5. Wiring connections (the entire charging system)

NOTE:
- Remove the following part(s) before trouble-shooting:
  1) Seat
  2) Fuel tank side panels
- Use the following special tool(s) for trouble-shooting.

Inductive tachometer:
P/N. YU-8036-A
Engine tachometer:
P/N. 90890-03113
Pocket tester:
P/N. YU-03112, 90890-03112

EB802011

1.Fuse (main)

Refer to "CHECKING THE SWITCH".

NO CONTINUITY → Replace the fuse.

CONTINUITY ↓

EB802012

2.Battery

- Check the battery condition.
  Refer to "CHECKING THE BATTERY" in CHAPTER 3.

Open-circuit voltage:
12.8 V or more at 20 °C (68 °F)

INCORRECT →
- Clean the battery terminals.
- Recharge or replace the battery.

CORRECT ↓

EB804011

3.Charging voltage

- Connect the engine tachometer to the spark plug lead #1.
- Connect the pocket tester (DC 20 V) to the battery.

Tester (+) lead → Battery (+) terminal
Tester (–) lead → Battery (–) terminal

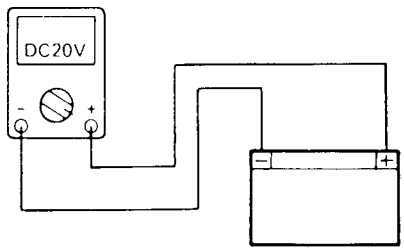

Downloaded from www.Manualslib.com manuals search engine

- Start the engine and accelerate to about 3,000 r/min.

Charging voltage:
14 V at 1,000 r/min

NOTE:
Use a fully charged battery.

MEETS SPECIFICATION

The charging circuit is not faulty.

OUT OF SPECIFICATION

EB804012

4.Charging coil resistance

- Disconnect the AC magneto coupler from the wire harness.
- Connect the pocket tester (Ω × 1) to the charging coils.

Tester (+) lead → White terminal ①
Tester (–) lead → White terminal ②

Tester (+) lead → White terminal ①
Tester (–) lead → White terminal ③

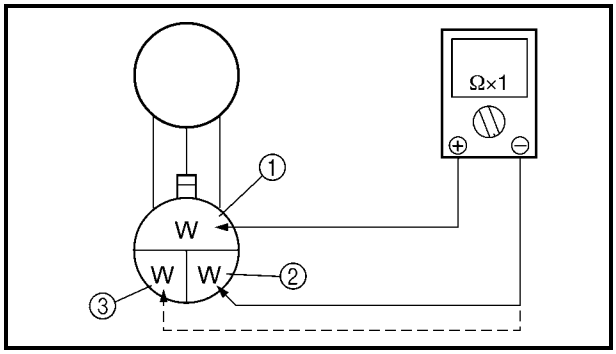

- Measure the stator coil resistance.

Charging coil resistance:
0.32 ~ 0.43 Ω at 20 °C (68 °F)

OUT OF SPECIFICATION

Replace the pickup coil/stator assembly.

MEETS SPECIFICATION

EB804015

5.Wiring connections

- Check the connections of the entire charging system.
  Refer to “CIRCUIT DIAGRAM”.

POOR CONNECTION

Properly connect the charging system.

CORRECT

Replace the rectifier/regulator.

Downloaded from www.Manualslib.com manuals search engine

EB805000

LIGHTING SYSTEM

CIRCUIT DIAGRAM

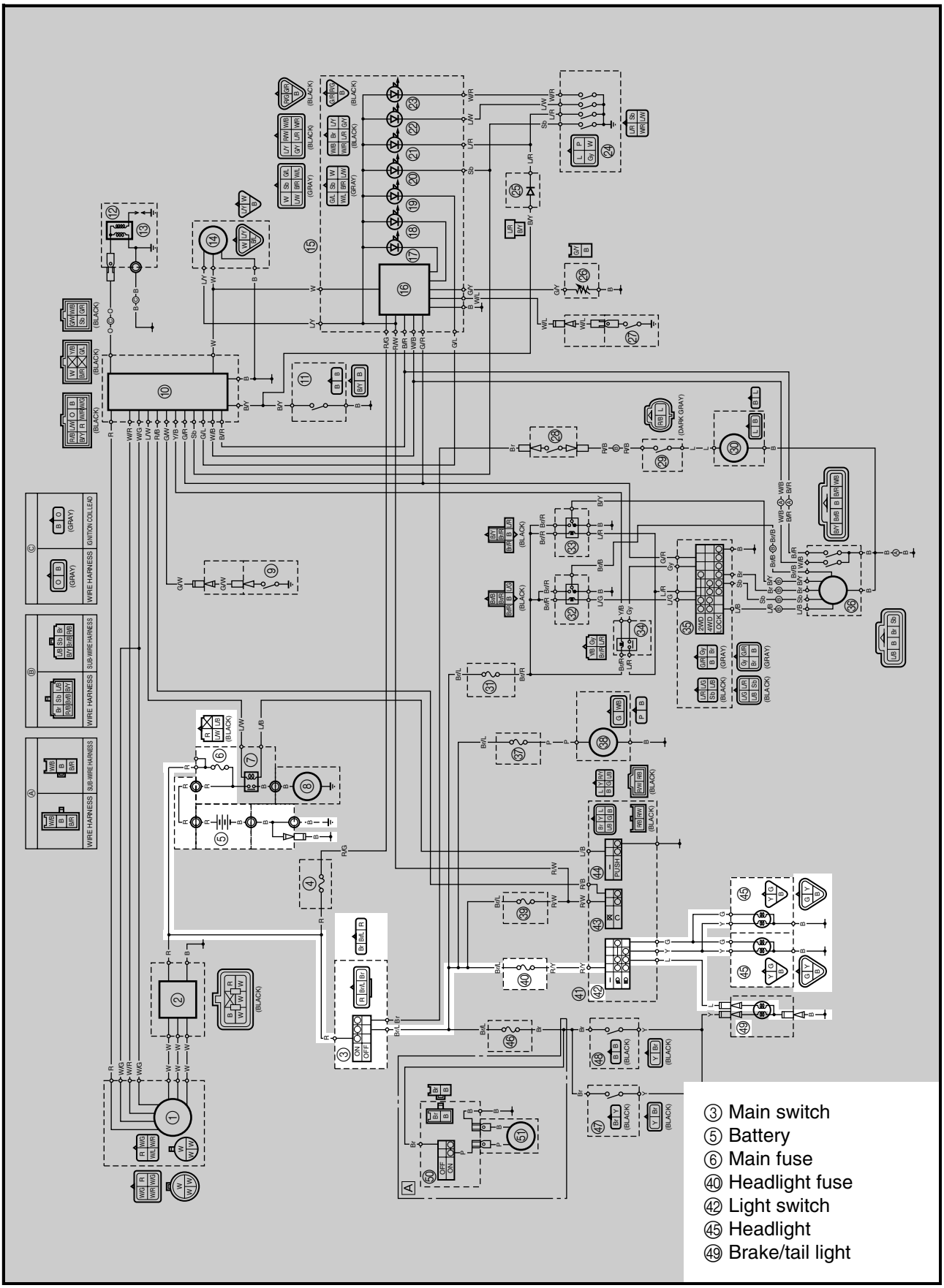

Downloaded from www.Manualslib.com manuals search engine

EB805010
TROUBLESHOOTING

IF THE HEADLIGHT AND/OR TAILLIGHT FAIL TO COME ON:

Procedure
Check:
1.Fuse (main, headlight)
2.Battery
3.Main switch
4.Light switch
5.Wiring connections
(the entire lighting system)

NOTE:
- Remove the following part(s) before trouble-shooting:
1)Seat
2)Front carrier
3)Front fender panel
- Use the following special tool(s) for trouble-shooting.

Pocket tester:
P/N. YU-03112, 90890-03112

EB802011

1.Fuse (main, headlight)

Refer to “CHECKING THE SWITCH”.

NO CONTINUITY → Replace the fuse.

CONTINUITY ↓

EB802012

2.Battery

- Check the battery condition.
Refer to “CHECKING THE BATTERY” in CHAPTER 3.

Open-circuit voltage:
12.8 V or more at 20 °C (68 °F)

INCORRECT →
- Clean the battery terminals.
- Recharge or replace the battery.

CORRECT ↓
*

Downloaded from www.Manualslib.com manuals search engine

*

3.Main switch

Refer to “CHECKING THE SWITCH”.

INCORRECT → Replace the main switch.

CORRECT ↓

4.Light switch

Refer to “CHECKING THE SWITCH”.

INCORRECT → Light switch is faulty, replace the handlebar switch (left).

CORRECT ↓

EB805013

5.Wiring connection

- Check the connections of the entire lighting system.
  Refer to “WIRING DIAGRAM”.

POOR CONNECTION → Properly connect the lighting system.

CORRECT ↓

Check the condition of each of the lighting system’s circuits.
Refer to “CHECKING THE LIGHTING SYSTEM”.

Downloaded from www.Manualslib.com manuals search engine

EB805020

CHECKING THE LIGHTING SYSTEM

1.If the headlights fail to come on:

1.Bulb and bulb socket

- Check the bulb and bulb socket for continuity.

NO CONTINUITY → Replace the bulb and/or bulb socket.

CONTINUITY ↓

2.Voltage

- Connect the pocket tester (DC 20 V) to the headlight couplers.

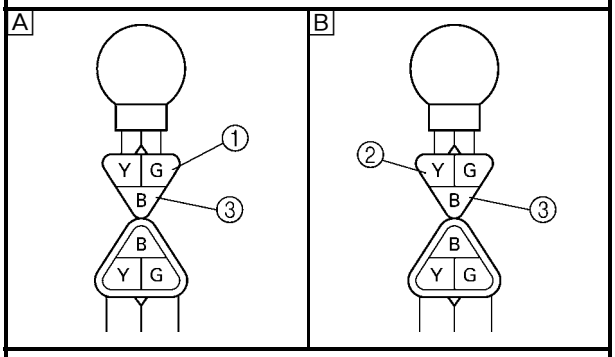

Tester (+) lead →
Green terminal ① or Yellow terminal ②
Tester (–) lead → Black terminal ③

A When the lights switch is on “LO”.
B When the lights switch is on “HI”.

- Turn the main switch to “ON”.
- Turn the lights switch to “LO” or “HI”.
- Check the voltage (12 V) of the “Green” and “Yellow” leads on the bulb socket connector.

OUT OF SPECIFICATION → The wiring circuit from the main switch to the bulb socket connector is faulty, repair it.

MEETS SPECIFICATION ↓

This circuit is not faulty.

Downloaded from www.Manualslib.com manuals search engine

EB805021

2.If the taillight fails to come on:

1.Bulb and bulb socket

- Check the bulb and bulb socket for continuity.

NO CONTINUITY → Replace the bulb and/or bulb socket.

CONTINUITY ↓

2.Voltage

- Connect the pocket tester (20 V) to the bulb socket coupler.

Tester (+) lead → Blue lead ①
Tester (–) lead → Black lead ②

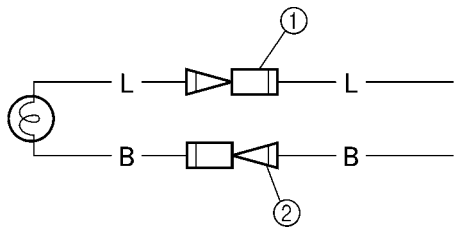

- Turn the main switch to “ON”.
- Turn the lights switch to “LO” or “HI”.
- Check the voltage (12 V) of the “Blue” lead on the bulb socket connector.

OUT OF SPECIFICATION → The wiring circuit from the main switch to the bulb socket connector is faulty, repair it.

MEETS SPECIFICATION ↓

This circuit is not faulty.

Downloaded from www.Manualslib.com manuals search engine

EB806000

SIGNAL SYSTEM

CIRCUIT DIAGRAM

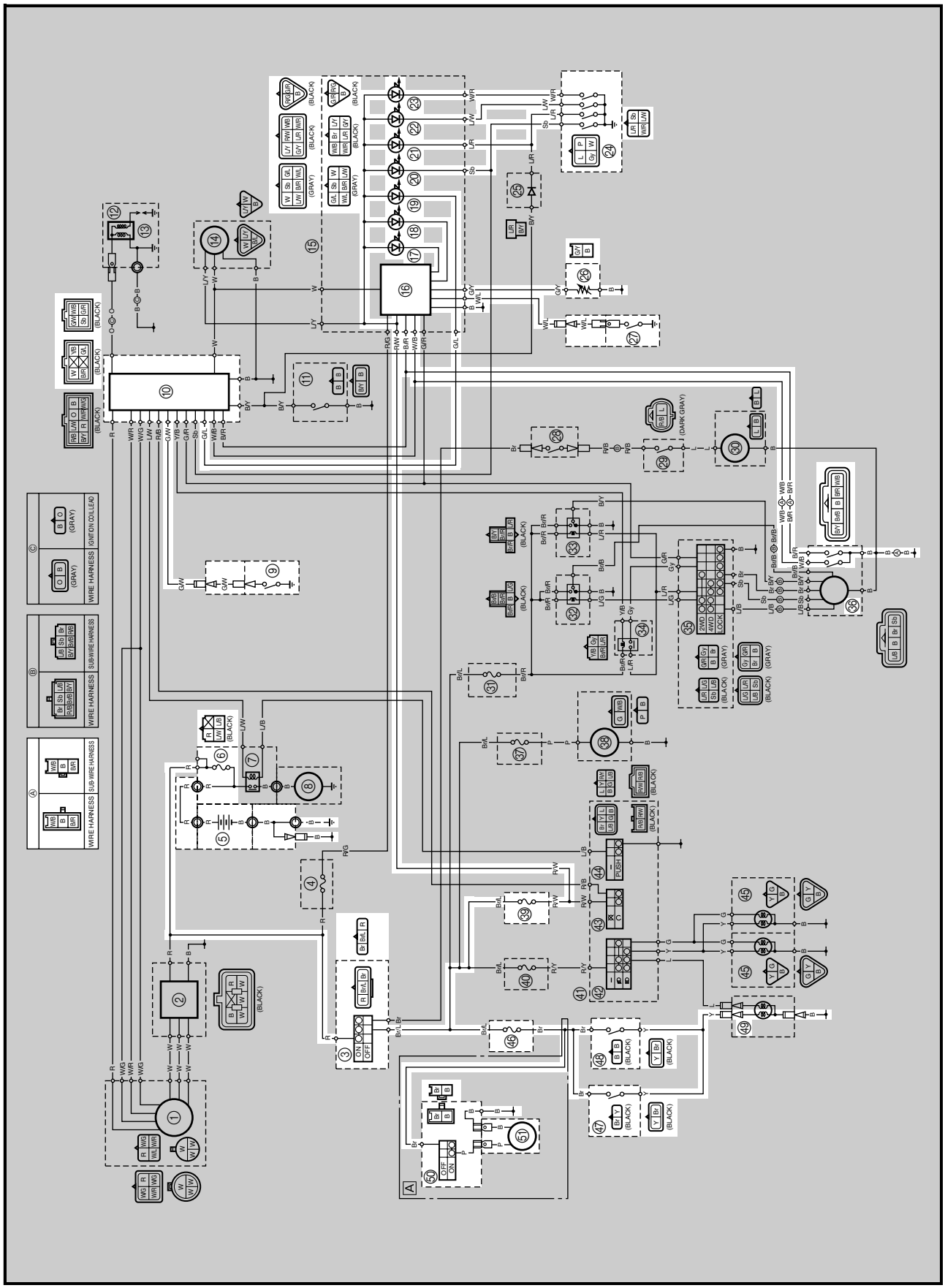

Downloaded from www.Manualslib.com manuals search engine

③ Main switch
⑤ Battery
⑥ Main fuse
⑨ Reverse switch
⑩ CDI unit
⑯ Multi-function meter
⑰ Differential gear lock indicator light
⑱ Coolant temperature indicator light
⑲ Reverse indicator light
⑳ Neutral indicator light
㉑ Park indicator light
㉒ High-range indicator light
㉓ Low-range indicator light
㉔ Gear position switch
㉖ Fuel sender
㉗ Thermo switch 1
㊱ Gear motor
㊴ Ignition fuse
㊻ Signaling system fuse
㊼ Rear brake light switch
㊽ Front brake light switch
㊾ Brake/tail light
㊿ Horn switch
(51) Horn

Downloaded from www.Manualslib.com manuals search engine

EB806010
TROUBLESHOOTING

IF THE BRAKE LIGHT AND/OR INDICATOR LIGHT FAILS TO COME ON:
IF THE HORN FAILS TO SOUND:

Procedure
Check:
1.Fuse (main, ignition, signaling system)
2.Battery
3.Main switch
4.Wiring connections
(the entire signal system)

NOTE:
- Remove the following part(s) before trouble-shooting:
1)Seat
2)Fuel tank
3)Air cleaner case
4)Front carrier
5)Front fender panel
- Use the following special tool(s) for trouble-shooting.

Pocket tester:
P/N. YU-03112, 90890-03112

EB802011

1.Fuse (main, ignition, signaling system)

Refer to “CHECKING THE SWITCH”.

NO CONTINUITY → Replace the fuse.

CONTINUITY ↓

EB802012

2.Battery

- Check the battery condition.
Refer to “CHECKING THE BATTERY” in CHAPTER 3.

Open-circuit voltage:
12.8 V or more at 20 °C (68 °F)

INCORRECT →
- Clean the battery terminals.
- Recharge or replace the battery.

CORRECT ↓
*

Downloaded from www.Manualslib.com manuals search engine

*

3.Main switch
Refer to “CHECKING THE SWITCH”.

INCORRECT → Replace the main switch.

CORRECT ↓

EB806011

4.Wiring connections
• Check the connections of the entire signal system. Refer to “CIRCUIT DIAGRAM”.

POOR CONNECTION → Properly connect the signal system.

CORRECT ↓

Check the condition of each of the signal system’s circuits.
Refer to “CHECKING THE SIGNAL SYSTEM”.

Downloaded from www.Manualslib.com manuals search engine

CHECKING THE SIGNAL SYSTEM

1.If the brake light fails to come on:

1.Bulb and bulb socket

- Check the bulb and bulb socket for continuity.

NO CONTINUITY → Replace the bulb and/or bulb socket.

CONTINUITY ↓

2.Brake light switches

Refer to “CHECKING THE SWITCH”.

NO CONTINUITY → Replace the brake light switch.

CONTINUITY ↓

3.Voltage

- Connect the pocket tester (DC 20 V) to the bulb socket connector.

Tester (+) lead → Yellow terminal ①
Tester (–) lead → Black terminal ②

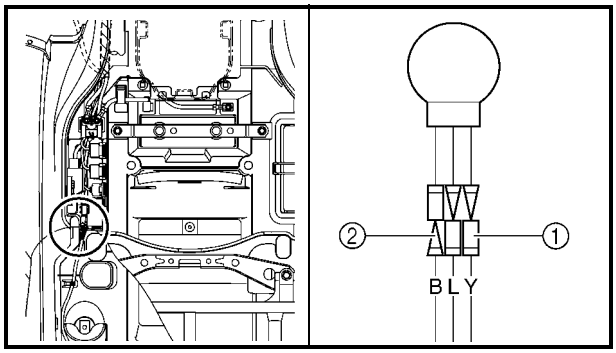

- Turn the main switch to “ON”.
- Turn the lights switch to “LO” or “HI”.
- Check the voltage (12 V) of the “Yellow” lead on the bulb socket connector.

OUT OF SPECIFICATION → The wiring circuit from the main switch to the bulb socket connector is faulty, repair it.

MEETS SPECIFICATION ↓

This circuit is not faulty.

Downloaded from www.Manualslib.com manuals search engine

EB806024

2.If the neutral indicator light fails to come on:

1.Neutral indicator light LED

- Check the LED of the neutral indicator light. Refer to “CHECKING THE LEDs”.

NO CONTINUITY → Replace the meter assembly.

CONTINUITY ↓

2.Gear position switch

Refer to “CHECKING THE SWITCH”.

NO CONTINUITY → Replace the gear position switch.

CONTINUITY ↓

3.Voltage

- Connect the pocket tester (DC 20 V) to the bulb socket coupler.

Tester (+) lead → Red/White terminal ①
Tester (–) lead → Sky blue terminal ②

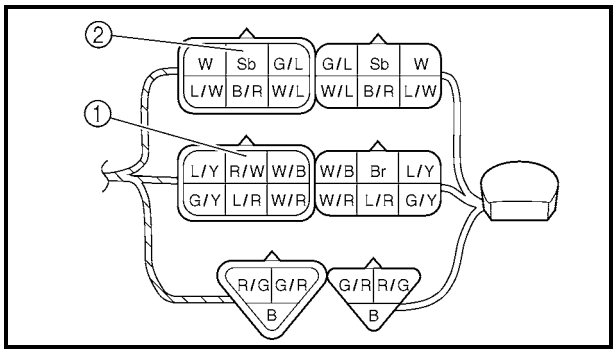

- Turn the main switch to “ON”.
- Check the voltage (12 V).

OUT OF SPECIFICATION → The wiring circuit from the main switch to the bulb socket connector is faulty, repair it.

MEETS SPECIFICATION ↓

This circuit is not faulty.

Downloaded from www.Manualslib.com manuals search engine

3.If the park indicator light fails to come on:

1.Park indicator light LED

- Check the LED of the park indicator light. Refer to “CHECKING THE LEDs”.

NO CONTINUITY → Replace the meter assembly.

CONTINUITY ↓

2.Gear position switch

Refer to “CHECKING THE SWITCH”.

NO CONTINUITY → Replace the gear position switch.

CONTINUITY ↓

3.Voltage

- Connect the pocket tester (DC 20 V) to the bulb socket coupler.

Tester (+) lead → Red/White terminal ①
Tester (–) lead → Blue/Red terminal ②

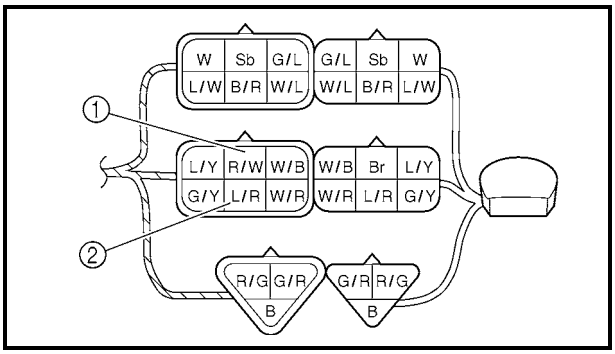

- Turn the main switch to “ON”.
- Check the voltage (12 V).

OUT OF SPECIFICATION → The wiring circuit from the main switch to the bulb socket connector is faulty, repair it.

MEETS SPECIFICATION ↓

This circuit is not faulty.

Downloaded from www.Manualslib.com manuals search engine

4.If the high-range indicator light fails to come on:

1.High-range indicator light LED

- Check the LED of the high-range indicator light.
  Refer to “CHECKING THE LEDs”.

NO CONTINUITY → Replace the meter assembly.

CONTINUITY ↓

2.Gear position switch

Refer to “CHECKING THE SWITCH”.

NO CONTINUITY → Replace the gear position switch.

CONTINUITY ↓

3.Voltage

- Connect the pocket tester (DC 20 V) to the bulb socket coupler.

Tester (+) lead → Red/White terminal ①
Tester (–) lead → Blue/White terminal ②

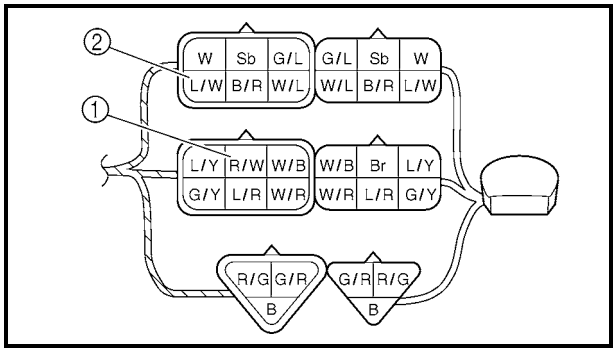

- Turn the main switch to “ON”.
- Check the voltage (12 V).

OUT OF SPECIFICATION → The wiring circuit from the main switch to the bulb socket connector is faulty, repair it.

MEETS SPECIFICATION ↓

This circuit is not faulty.

Downloaded from www.Manualslib.com manuals search engine

5.If the low-range indicator light fails to come on:

1.Low-range indicator light LED

- Check the LED of the low-range indicator light.
  Refer to “CHECKING THE LEDs”.

NO CONTINUITY → Replace the meter assembly.

CONTINUITY ↓

2.Gear position switch

Refer to “CHECKING THE SWITCH”.

NO CONTINUITY → Replace the gear position switch.

CONTINUITY ↓

3.Voltage

- Connect the pocket tester (DC 20 V) to the bulb socket coupler.

Tester (+) lead → Red/White terminal ①
Tester (–) lead → White/Red terminal ②

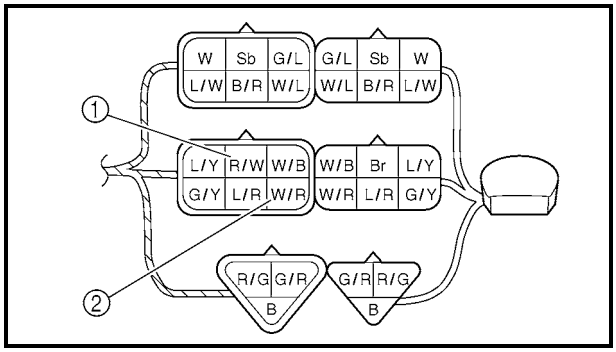

- Turn the main switch to “ON”.
- Check the voltage (12 V).

OUT OF SPECIFICATION → The wiring circuit from the main switch to the bulb socket connector is faulty, repair it.

MEETS SPECIFICATION ↓

This circuit is not faulty.

Downloaded from www.Manualslib.com manuals search engine

6.If the reverse indicator light fails to come on:

1.Reverse indicator light LED

- Check the LED of the reverse indicator light.
  Refer to “CHECKING THE LEDs”.

NO CONTINUITY → Replace the meter assembly.

CONTINUITY ↓

2.Reverse switch

Refer to “CHECKING THE SWITCH”.

NO CONTINUITY → Replace the reverse switch.

CONTINUITY ↓

3.Voltage

- Connect the pocket tester (DC 20 V) to the bulb socket coupler.

Tester (+) lead → Red/White terminal ①
Tester (–) lead → Green/Blue terminal ②

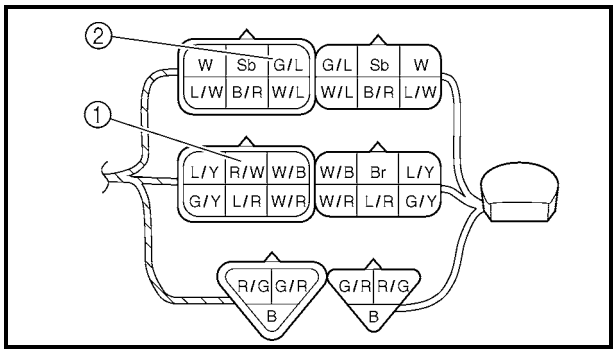

- Turn the main switch to “ON”.
- Check the voltage (12 V).

OUT OF SPECIFICATION → The wiring circuit from the main switch to the bulb socket connector is faulty, repair it.

MEETS SPECIFICATION ↓

Replace the CDI unit.

Downloaded from www.Manualslib.com manuals search engine

7.If the coolant temperature indicator light does not come on when the main switch to “ON”, or if the coolant temperature indicator light does not come on when the temperature is high (more than 107 ~ 113 °C (224.6 ~ 235.4 °F)):

1.Coolant temperature indicator light LED

- Check the LED of the coolant indicator light.
  Refer to “CHECKING THE LEDs”.

NO CONTINUITY → Replace the meter assembly.

CONTINUITY ↓

2.Thermo switch 1

- Remove the thermo switch 1 from the cylinder head.
- Connect the pocket tester (Ω × 1) to the thermo switch ①.
- Immerse the thermo switch 1 in coolant ②.
- Check the thermo switch 1 for continuity.
  While heating the coolant use a thermometer ③ to record the temperatures.

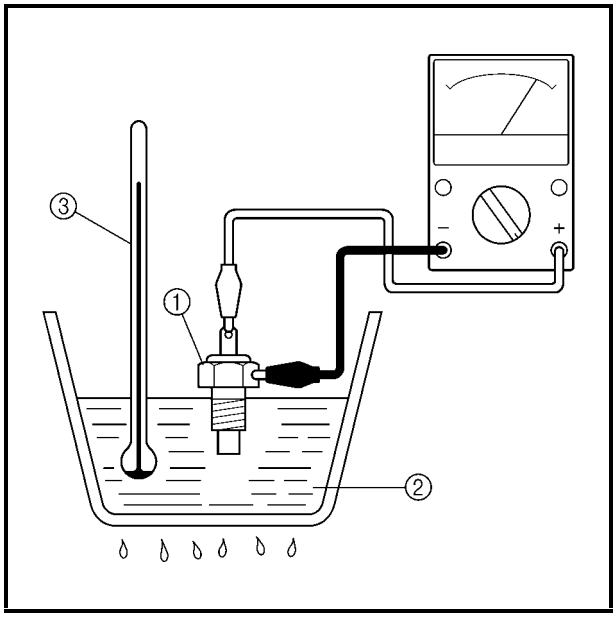

Test step	Water temperature Thermo switch 1	Good condition
1	0 ~ 103 °C (32 ~ 217.4 °F)	×
2	More than 110 ± 3 °C (230 ± 5.4 °F)	○
3*	110 ~ 103 °C (230 ~ 217.4 °F)	○
4*	Less than 103 °C (217.4 °F)	×

Tests 1 & 2; Heat-up tests
Tests 3* & 4*; Cool-down tests
○: Continuity ×: No continuity

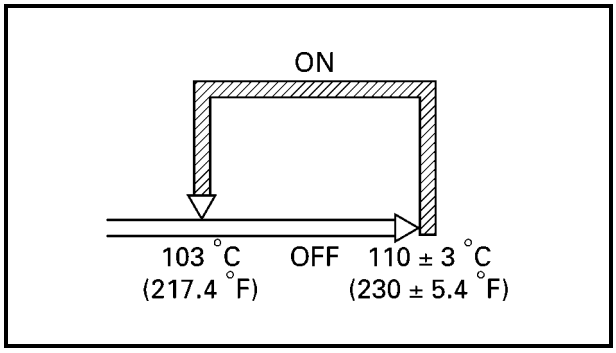

⚠ WARNING

Handle the thermo switch 1 with special care.
Never subject it to a strong shock or allow it to be dropped. Should it be dropped, it must be replaced.

Thermo switch 1:
8 Nm (0.8 m • kg, 5.8 ft • lb)
Three bond sealock® #10

BAD CONDITION → Replace the thermo switch 1.

GOOD CONDITION ↓
*

Downloaded from www.Manualslib.com manuals search engine

*

3.Voltage

- Connect the pocket tester (DC 20 V) to the bulb socket connector.

Tester (+) lead → White/Blue terminal ①
Tester (–) lead → Frame ground

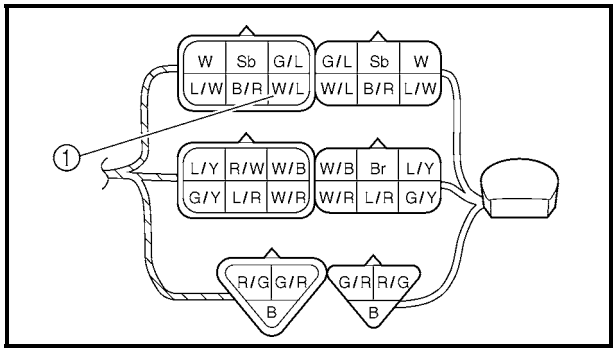

- Turn the main switch to "ON".
- Check the voltage (12 V).

OUT OF SPECIFICATION

The wiring circuit from the main switch to the bulb socket connector is faulty, repair it.

MEETS SPECIFICATION

4.Start switch

Refer to "CHECKING THE SWITCH".

INCORRECT

Replace the handlebar switch (left).

CORRECT

This circuit is not faulty.

Downloaded from www.Manualslib.com manuals search engine

8.If the differential gear lock indicator light LED fails to come on:

1.Differential gear lock indicator light

- Check the LED of the differential gear lock indicator light.
  Refer to “CHECKING THE LEDs”.

NO CONTINUITY → Replace the meter assembly.

CONTINUITY ↓

2.Four-wheel drive switch

Refer to “CHECKING THE SWITCH”.

NO CONTINUITY → Replace the four-wheel drive switch.

CONTINUITY ↓

3.Voltage

- Connect the pocket tester (DC 20 V) to the bulb socket lead.

Tester (+) lead → Black/Red terminal ①
Tester (–) lead → Frame ground

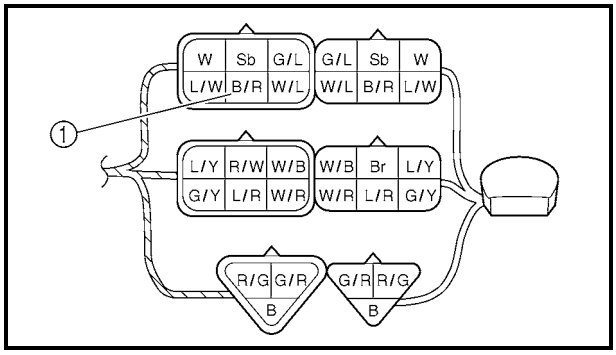

- Turn the main switch to “ON”.
- Check the voltage (12 V).

OUT OF SPECIFICATION → The wiring circuit from the main switch to the bulb socket connector is faulty, repair it.

MEETS SPECIFICATION ↓

This circuit is not faulty.

Downloaded from www.Manualslib.com manuals search engine

9.Horn does not sound. (for Europe and Oceania)

1.Horn switch

Refer to “CHECKING THE SWITCH”.

INCORRECT → Replace horn switch.

CORRECT ↓

2.Voltage

- Connect the pocket tester (DC 20 V) to the horn connector at the horn terminal.

Tester (+) lead → Pink lead ①
Tester (–) lead → Frame ground

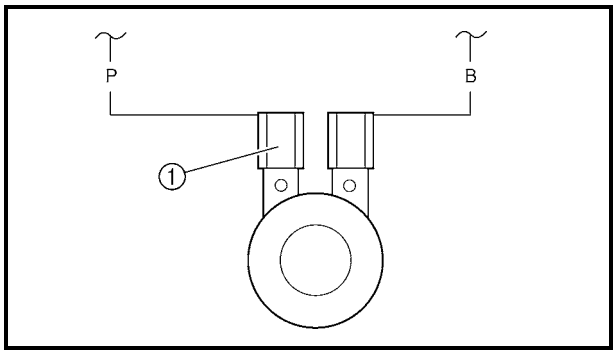

- Turn the main switch to “ON”.
- Push the horn switch.
- Check for voltage (12 V) on the “Pink” lead at the horn terminal.

OUT OF SPECIFICATION → The wiring circuit from the main switch to the bulb socket connector is faulty, repair it.

MEETS SPECIFICATION ↓

3.Horn

- Disconnect the black lead at the horn terminal.
- Connect a jumper lead ① to the horn terminal and ground the jumper lead.
- Turn the main switch to “ON”.

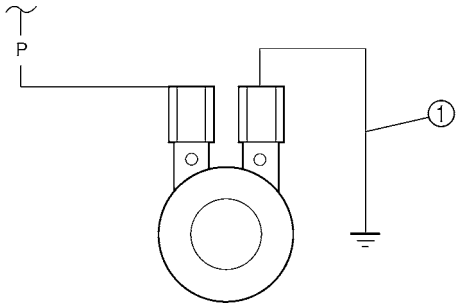

HORN IS SOUNDED → Horn is good.

HORN IS NOT SOUNDED ↓
*

Downloaded from www.Manualslib.com manuals search engine

*

4.Voltage

- Connect the pocket tester (DC 20 V) to the horn connector at the horn terminal.

Tester (+) lead → Black lead ①
Tester (–) lead → Frame ground

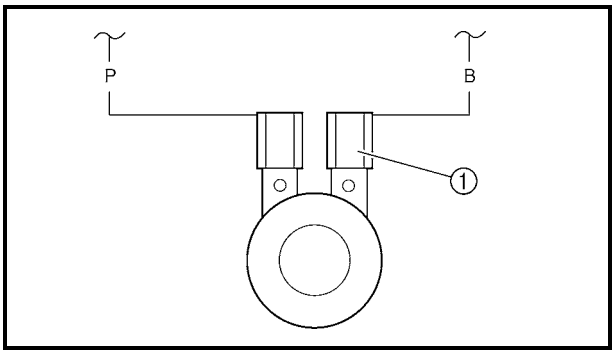

- Turn the main switch to “ON”.
- Push the horn switch.
- Check for voltage (12 V) on the “Black” lead at the horn terminal.

OUT OF SPECIFICATION

Replace horn.

MEETS SPECIFICATION

Adjust or replace horn.

Downloaded from www.Manualslib.com manuals search engine

COOLING SYSTEM

CIRCUIT DIAGRAM

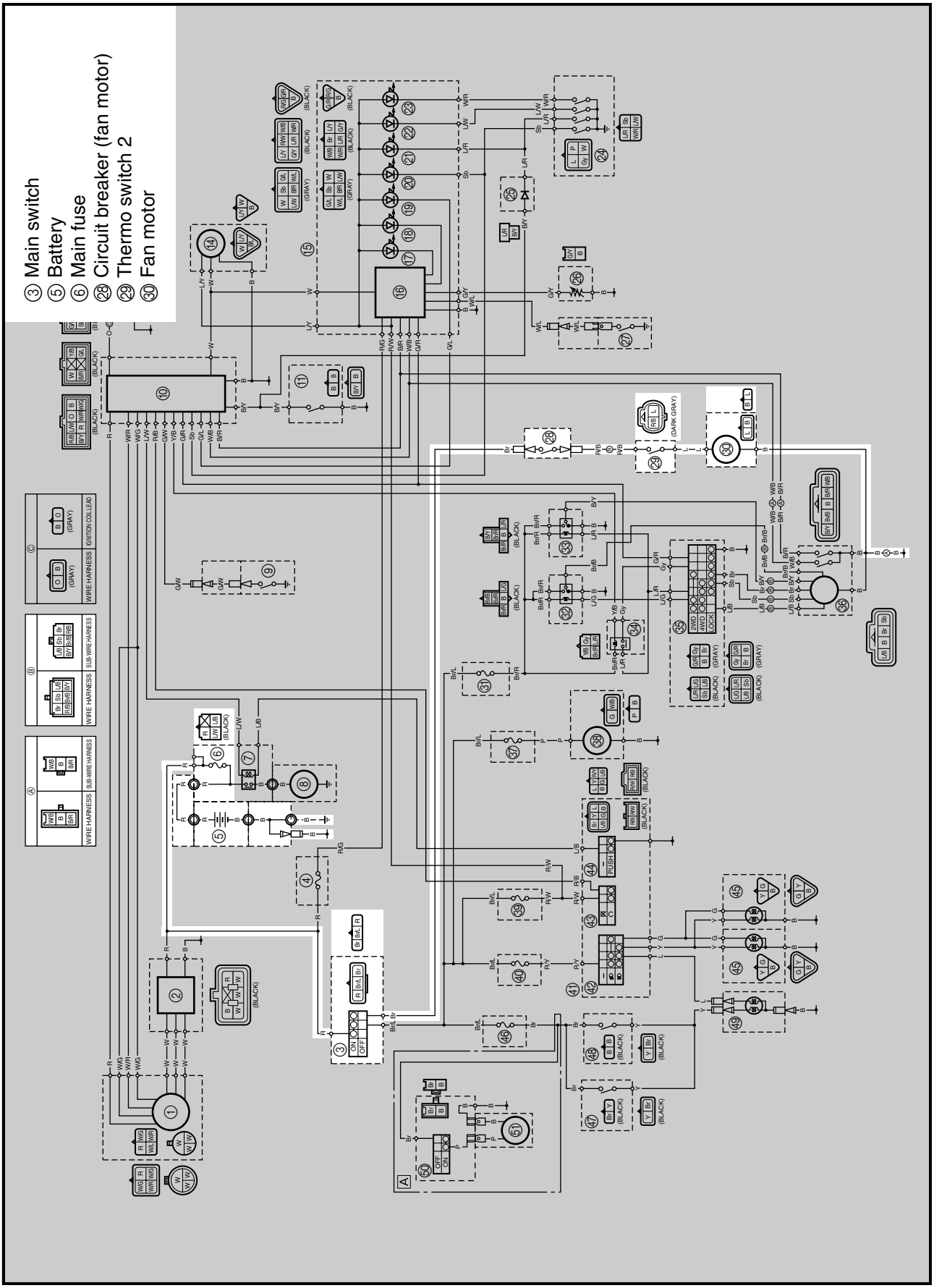

Downloaded from www.Manualslib.com manuals search engine

TROUBLESHOOTING

IF THE FAN MOTOR DOES NOT MOVE:

Procedure

Check:
1. Fuse (main)
2. Battery
3. Main switch
4. Fan motor
5. Circuit breaker (fan motor)
6. Thermo switch 2
7. Wiring connection (the entire cooling system)

NOTE:
- Remove the following part(s) before trouble-shooting.
  1) Seat
  2) Front carrier
  3) Front fender
- Use the following special tool(s) for trouble-shooting.

Pocket tester:
P/N. YU-03112, 90890-03112

EB802011

1.Fuse (main)

Refer to “CHECKING THE SWITCH”.

NO CONTINUITY → Replace the fuse.

CONTINUITY ↓

EB802012

2.Battery

- Check the battery condition.
  Refer to “CHECKING THE BATTERY” in CHAPTER 3.

Open-circuit voltage:
12.8 V or more at 20 °C (68 °F)

INCORRECT →
- Clean the battery terminals.
- Recharge or replace the battery.

CORRECT ↓

3.Main switch

Refer to “CHECKING THE SWITCH”.

INCORRECT → Replace the main switch.

CORRECT ↓

*

Downloaded from www.Manualslib.com manuals search engine

*

4.Fan motor

- Disconnect the fan motor coupler.
- Connect the battery (12 V) as shown.

Battery (+) lead → Blue terminal ①
Battery (–) lead → Black terminal ②

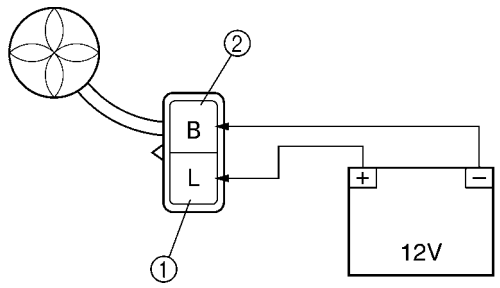

- Check the operation of the fan motor.

DOES NOT TURN

Replace the fan motor.

TURNS

5.Circuit breaker (fan motor)

- Remove the circuit breaker from the wire harness.
- Connect the pocket tester (Ω × 1) to the circuit breaker.

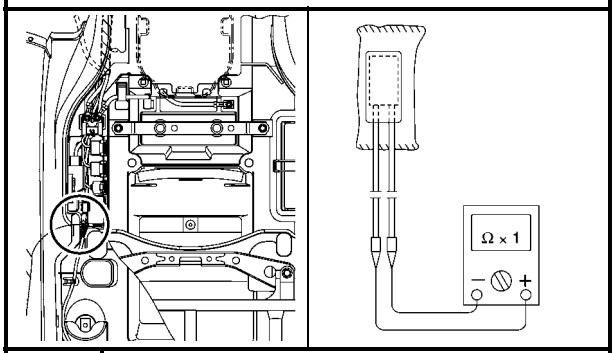

Circuit breaker resistance:
Zero Ω at 20 °C (68 °F)

OUT OF SPECIFICATION

Replace the circuit breaker.

MEETS SPECIFICATION

*

Downloaded from www.Manualslib.com manuals search engine

*

6.Thermo switch 2

- Remove the thermo switch 2 from the radiator.
- Connect the pocket tester (Ω × 10) to the thermo switch 2 ①.
- Immerse the thermo switch 2 in coolant ②.
- Check the thermo switch 2 for continuity. While heating the coolant use a thermometer ③ to record the temperatures.

Test step	Water temperature / Thermo switch 2	Good condition
1	Less than 75 ± 3 °C (167 ± 5.4 °F)	×
2	More than 75 ± 3 °C (167 ± 5.4 °F)	○
3*	More than 68 °C (154.4 °F)	○
4*	Less than 68 °C (154.4 °F)	×

Tests 1 & 2; Heat-up tests
Tests 3* & 4*; Cool-down tests
○: Continuity ×: No continuity

⚠ WARNING

Handle the thermo switch 2 with special care.
Never subject it to a strong shock or allow it to be dropped. Should it be dropped, it must be replaced.

Thermo switch 2:
28 Nm (2.8 m • kg, 20 ft • lb)
Three bond sealock® #10

GOOD CONDITION

*

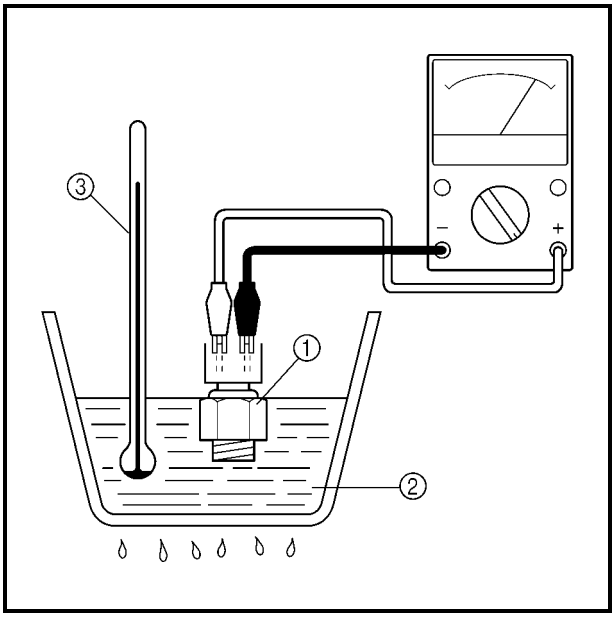

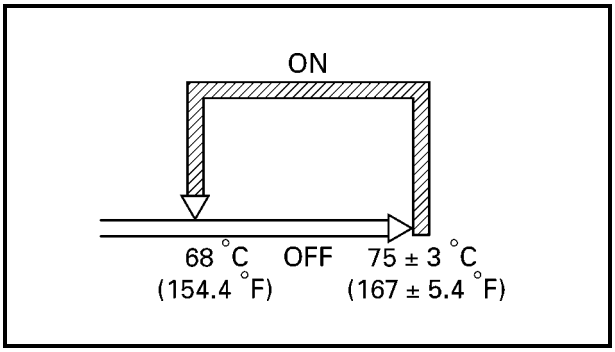

BAD CONDITION

Replace the thermo switch 2.

Downloaded from www.Manualslib.com manuals search engine

*

EB803028

7.Wiring connection

- Check the connections of the entire starting system.
  Refer to “CIRCUIT DIAGRAM”.

POOR CONNECTION

Properly connect the cooling system.

CORRECT

This circuit is not faulty.

Downloaded from www.Manualslib.com manuals search engine

2WD/4WD SELECTING SYSTEM

CIRCUIT DIAGRAM

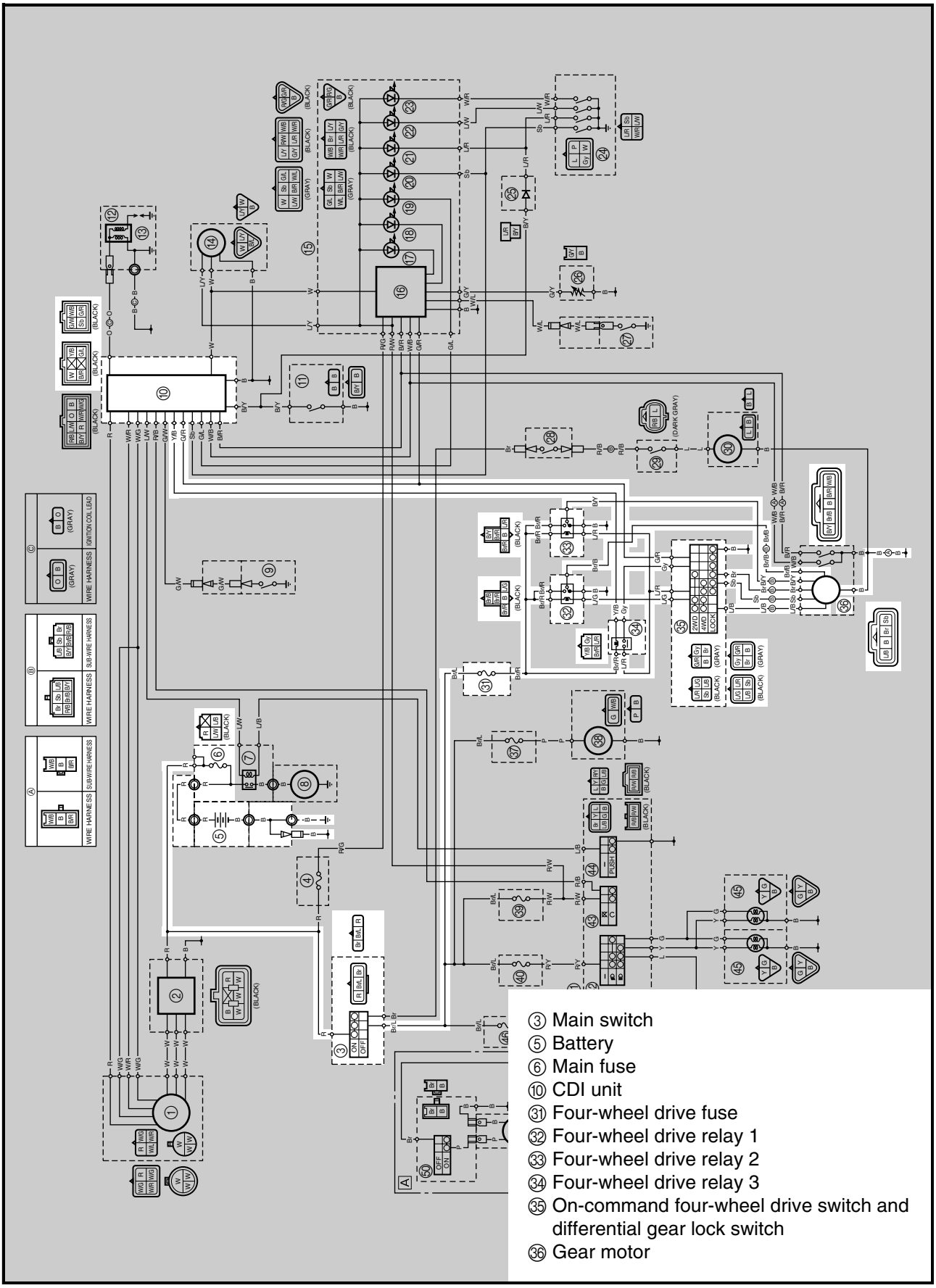

Downloaded from www.Manualslib.com manuals search engine

EB803020
TROUBLESHOOTING

IF THE FOUR-WHEEL DRIVE INDICATOR FAILS TO COME ON:

Procedure

Check:
1. Fuse (main, four-wheel drive)
2. Battery
3. Main switch
4. Four-wheel drive relay 1
5. Four-wheel drive relay 2
6. Four-wheel drive relay 3
7. On-command four-wheel drive switch and differential gear lock switch
8. Gear motor
9. Wiring connections (the entire 2WD/4WD selecting system)

NOTE:
- Remove the following part(s) before trouble-shooting:
  1) Seat
  2) Front carrier
  3) Front fender
- Use the following special tool(s) for trouble-shooting.

Pocket tester:
P/N. YU-03112, 90890-03112

EB802011

1. Fuse (main, four-wheel drive)

Refer to "CHECKING THE SWITCH".

NO CONTINUITY → Replace the fuse.

CONTINUITY ↓

EB802012

2. Battery

- Check the battery condition.
  Refer to "CHECKING THE BATTERY" in CHAPTER 3.

Open-circuit voltage:
12.8 V or more at 20 °C (68 °F)

INCORRECT →
- Clean the battery terminals.
- Recharge or replace the battery.

CORRECT ↓

3. Main switch

Refer to "CHECKING THE SWITCH".

INCORRECT → Replace the main switch.

CORRECT ↓

*

Downloaded from www.Manualslib.com manuals search engine

*

4.Four-wheel drive relay 1
• Remove the four-wheel drive relay 1 from the wire harness. • Connect the pocket tester (Ω × 1) and the battery (12 V) to the four-wheel drive relay 1 terminals.
Tester (+) lead → **Brown/Black terminal ①** **Tester (–) lead → Black terminal ②**
Battery (+) terminal → **Brown/Red terminal ③** **Battery (–) terminal →** **Blue/Green terminal ④**
Tester (+) lead → **Brown/Black terminal ①** **Tester (–) lead → Brown/Red terminal ⑤**
• Check the four-wheel drive relay 1 for continuity.

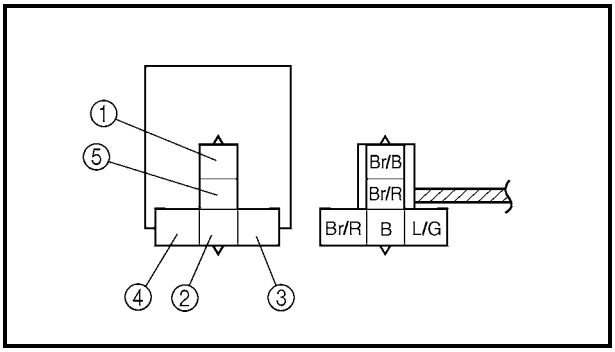

NO CONTINUITY

Replace the four-wheel drive relay 1.

CONTINUITY

5.Four-wheel drive relay 2
• Remove the four-wheel drive relay 2 from the wire harness. • Connect the pocket tester (Ω × 1) and the battery (12 V) to the four-wheel drive relay 2 terminals.
Tester (+) lead → **Black/Yellow terminal ①** **Tester (–) lead → Black terminal ②**
Battery (+) terminal → **Brown/Red terminal ③** **Battery (–) terminal →** **Blue/Red terminal ④**
Tester (+) lead → **Black/Yellow terminal ①** **Tester (–) lead → Brown/Red terminal ⑤**
• Check the four-wheel drive relay 2 for continuity.

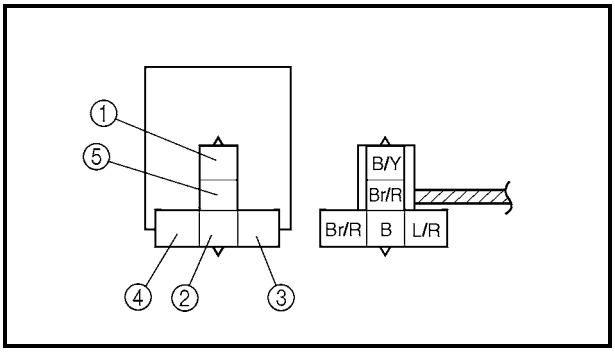

NO CONTINUITY

Replace the four-wheel drive relay 2.

CONTINUITY

*

Downloaded from www.Manualslib.com manuals search engine

*

6.Four-wheel drive relay 3

- Remove the four-wheel drive relay 3 from the wire harness.
- Connect the pocket tester (Ω × 1) and the battery (12 V) to the four-wheel drive relay 3 terminals.

Tester (+) lead →
Brown/Red terminal ①
Tester (–) lead →
Yellow/Black terminal ②

Battery (+) terminal →
Brown/Red terminal ①
Battery (–) terminal →
Yellow/Black terminal ②

Tester (+) lead → Blue/Red terminal ③
Tester (–) lead → Gray terminal ④

- Check the four-wheel drive relay 3 for continuity.

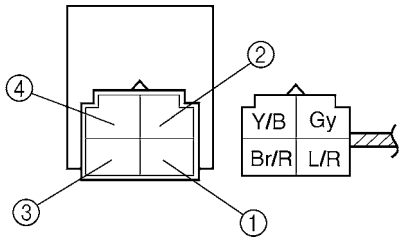

NO CONTINUITY

Replace the four-wheel drive relay 3.

CONTINUITY

7.On-command four-wheel drive switch and differential gear lock switch

Refer to “CHECKING THE SWITCH”.

INCORRECT

Replace the on-command four-wheel drive switch and differential gear lock switch.

CORRECT

*

Downloaded from www.Manualslib.com manuals search engine

*

8.Gear motor

- Disconnect the gear motor coupler.
- Remove the gear motor from the differential gear case.
  Refer to “FRONT CONSTANT VELOCITY JOINTS AND DIFFERENTIAL GEAR” in CHAPTER 7.
- Connect two C size batteries to the gear motor terminals ① (as shown illustrations).

A Check that the pinion gear ② turns counter-clockwise.
B Check that the pinion gear ② turns clockwise.

- Make sure that the drive gear (shift fork sliding gear) operates correctly.

NOTE:
When installing the differential gear case in the gear motor, refer to “FRONT CONSTANT VELOCITY JOINTS AND DIFFERENTIAL GEAR” in CHAPTER 7.

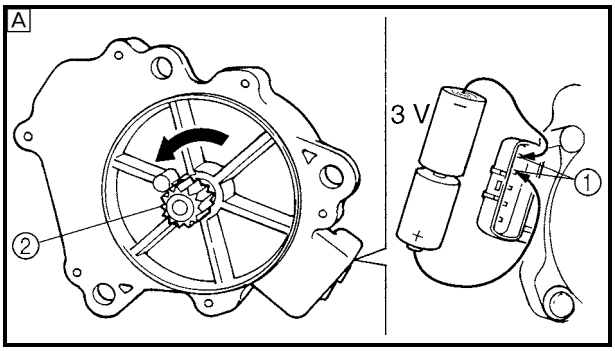

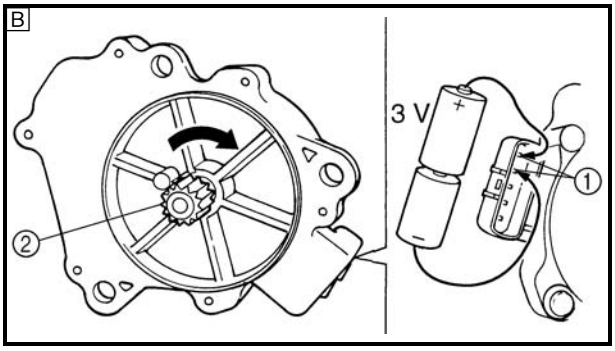

INCORRECT

Replace the gear motor.

CORRECT

EB803028

9.Wiring connection

- Check the connections of the entire 2WD/4WD selecting system.
  Refer to “CIRCUIT DIAGRAM”.

POOR CONNECTION

Properly connect the 2WD/4WD selecting system.

CORRECT

Replace the meter assembly.

Downloaded from www.Manualslib.com manuals search engine

TROUBLESHOOTING

NOTE:
The following troubleshooting does not cover all the possible causes of trouble. It should be helpful, however, as a guide to troubleshooting. Refer to the relative procedure in this manual for inspection, adjustment and replacement of parts.

STARTING FAILURE/HARD STARTING

FUEL SYSTEM

Fuel tank
- Empty
- Clogged fuel filter
- Clogged fuel strainer
- Clogged fuel breather hose
- Deteriorated or contaminated fuel

Fuel cock
- Clogged fuel hose

Carburetor
- Deteriorated or contaminated fuel
- Clogged pilot jet
- Clogged pilot air passage
- Sucked-in air
- Deformed float
- Worn needle valve
- Improperly sealed valve seat
- Improperly adjusted fuel level
- Improperly set pilot jet
- Clogged starter jet
- Starter plunger malfunction

Air filter
- Clogged air filter element

ELECTRICAL SYSTEM

Spark plug
- Improper plug gap
- Worn electrodes
- Wire between terminals broken
- Improper heat range
- Faulty spark plug cap

Ignition coil
- Broken or shorted primary/secondary
- Faulty spark plug lead
- Broken body

CDI system
- Faulty CDI unit
- Faulty pickup coil
- Faulty charging/rotor rotation direction coil
- Broken woodruff key

Switches and wiring
- Faulty main switch
- Faulty engine stop switch
- Broken or shorted wiring
- Faulty gear position switch
- Faulty start switch
- Faulty rear brake switch

Starter motor
- Faulty starter motor
- Faulty starter relay
- Faulty starter clutch

Downloaded from www.Manualslib.com manuals search engine

COMPRESSION SYSTEM

Cylinder and cylinder head
- Loose spark plug
- Loose cylinder head or cylinder
- Broken cylinder head gasket
- Broken cylinder gasket
- Worn, damaged or seized cylinder

Piston and piston rings
- Improperly installed piston ring
- Worn, fatigued or broken piston ring
- Seized piston ring
- Seized or damaged piston

Valve, camshaft and crankshaft
- Improperly sealed valve
- Improperly contacted valve and valve seat
- Improper valve timing
- Broken valve spring
- Seized camshaft
- Seized crankshaft

POOR IDLE SPEED PERFORMANCE

POOR IDLE SPEED PERFORMANCE

Carburetor
- Improperly returned starter plunger
- Loose pilot jet
- Clogged pilot jet
- Clogged pilot air jet
- Improperly adjusted idle speed (Throttle stop screw)
- Improper throttle cable play
- Flooded carburetor

Electrical system
- Faulty spark plug
- Faulty CDI unit
- Faulty pickup coil
- Faulty charging/rotor rotation direction coil
- Faulty ignition coil

Valve train
- Improperly adjusted valve clearance

Air filter
- Clogged air filter element

POOR MEDIUM AND HIGH-SPEED PERFORMANCE

POOR MEDIUM AND HIGH-SPEED PERFORMANCE

Refer to “STARTING FAILURE/HARD STARTING” and “POOR IDLE SPEED PERFORMANCE-VALVE TRAIN”.

Carburetor
- Improper jet needle clip position
- Improperly adjusted fuel level
- Clogged or loose main jet
- Deteriorated or contaminated fuel

Air filter
- Clogged air filter element

Downloaded from www.Manualslib.com manuals search engine

FAULTY DRIVE TRAIN

The following conditions may indicate damaged shaft drive components:

Symptoms	Possible Causes
1.A pronounced hesitation or “jerky” movement during acceleration, deceleration, or sustained speed. (This must not be confused with engine surging or transmission characteristics.) 2.A “rolling rumble” noticeable at low speed; a high-pitched whine; a “clunk” from a shaft drive component or area. 3.A locked-up condition of the shaft drive mechanism, no power transmitted from the engine to the front and/or rear wheels.	A.Bearing damage. B.Improper gear lash. C.Gear tooth damage. D.Broken drive shaft. E.Broken gear teeth. F.Seizure due to lack of lubrication. G.Small foreign objects lodged between the moving parts.

NOTE:

Areas A, B, and C above may be extremely difficult to diagnose. The symptoms are quite subtle and difficult to distinguish from normal machine operating noise. If there is reason to believe these components are damaged, remove the components and inspect them.

Downloaded from www.Manualslib.com manuals search engine

FAULTY GEAR SHIFTING

HARD SHIFTING

Refer to “CLUTCH SLIPPING/DRAGGING-CLUTCH DRAGGING”.

SHIFT LEVER DOES NOT MOVE

Shift shaft
- Bent shift shaft

Shift cam, shift fork
- Groove jammed with impurities
- Seized shift fork
- Bent shift fork guide bar

Transmission
- Seized transmission gear
- Jammed impurities
- Incorrectly assembled transmission

Shift guide
- Broken shift guide

JUMPS OUT OF GEAR

Shift shaft
- Improperly adjusted shift lever position
- Worn shift shaft lever
- Improperly returned stopper lever

Shift fork
- Worn shift fork

Shift cam
- Improper thrust play
- Worn shift cam groove

Transmission
- Worn gear dog

FAULTY CLUTCH PERFORMANCE

ENGINE OPERATES BUT MACHINE WILL NOT MOVE

V-belt
- Bent, damaged or worn V-belt
- V-belt slips

Primary pulley cam and primary pulley slider
- Damaged or worn primary pulley cam
- Damaged or worn primary pulley slider

Transmission
- Damaged transmission gears

CLUTCH SLIPPING

Clutch spring
- Damaged, loose or worn clutch shoe spring

Clutch shoe
- Damaged or worn clutch shoe

Primary sliding sheave
- Seized primary sliding sheave

POOR STARTING PERFORMANCE

V-belt
- V-belt slips
- Oil or grease on the V-belt

Primary sliding sheave
- Faulty operation
- Worn pin groove
- Worn pin

Clutch shoe
- Bent, damaged or worn clutch shoe

Downloaded from www.Manualslib.com manuals search engine

POOR SPEED PERFORMANCE

V-belt
- Oil or grease on the V-belt

Primary pulley weight
- Faulty operation
- Worn primary pulley weight

Primary fixed sheave
- Worn primary fixed sheave

Primary sliding sheave
- Worn primary sliding sheave

Secondary fixed sheave
- Worn secondary fixed sheave

Secondary sliding sheave
- Worn secondary sliding sheave

OVERHEATING

OVERHEATING

Ignition system
- Improper spark plug gap
- Improper spark plug heat range
- Faulty CDI unit

Fuel system
- Improper carburetor main jet (improper setting)
- Improper fuel level
- Clogged air filter element

Compression system
- Heavy carbon build-up

Engine oil
- Improper oil level
- Improper oil viscosity
- Inferior oil quality

Brake
- Brake drag

Oil cooling system
- Clogged or damaged oil cooler

FAULTY BRAKE

POOR BRAKING EFFECT
- Worn brake pads
- Worn disc
- Air in brake fluid
- Leaking brake fluid
- Faulty master cylinder kit cup
- Faulty caliper kit seal
- Loose union bolt
- Broken brake hose and pipe
- Oily or greasy disc/brake pads
- Improper brake fluid level

Downloaded from www.Manualslib.com manuals search engine

SHOCK ABSORBER MALFUNCTION

MALFUNCTION

- Bent or damaged damper rod
- Damaged oil seal lip
- Fatigued shock absorber spring

UNSTABLE HANDLING

UNSTABLE HANDLING

Handlebar

- Improperly installed or bent

Steering

- Incorrect toe-in
- Bent steering stem
- Improperly installed steering stem
- Damaged bearing or bearing race
- Bent tie-rods
- Deformed steering knuckles

Tires

- Uneven tire pressures on both sides
- Incorrect tire pressure
- Uneven tire wear

Wheels

- Deformed wheel
- Loose bearing
- Bent or loose wheel axle
- Excessive wheel runout

Frame

- Bent
- Damaged frame

LIGHTING SYSTEM

HEADLIGHT DARK

- Improper bulb
- Too many electric accessories
- Hard charging (broken charging coil and/or faulty rectifier/regulator)
- Incorrect connection
- Improperly grounded
- Poor contacts (main or light switch)
- Bulb life expired

BULB BURNT OUT

- Improper bulb
- Faulty battery
- Faulty rectifier/regulator
- Improperly grounded
- Faulty main and/or light switch
- Bulb life expired

Downloaded from www.Manualslib.com manuals search engine

YAMAHA

YAMAHA MOTOR CO., LTD.
2500 SHINGAI IWATA SHIZUOKA JAPAN

PRINTED IN U.S.A.

Downloaded from www.Manualslib.com manuals search engine

Downloaded from www.Manualslib.com manuals search engine

YFM660FP WIRING DIAGRAM

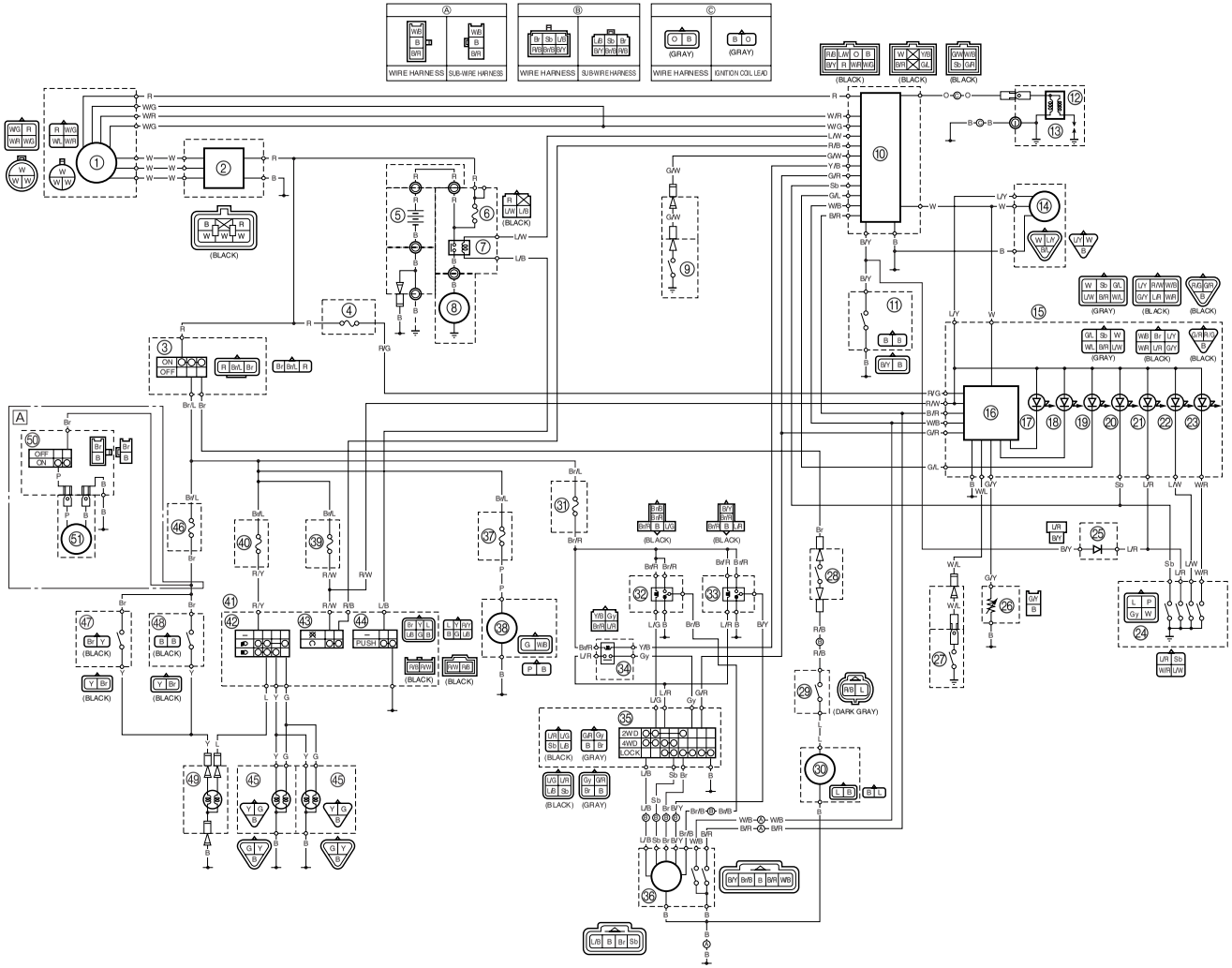

① AC magneto
② Rectifier/regulator
③ Main switch
④ Backup fuse
⑤ Battery
⑥ Main fuse
⑦ Starter relay
⑧ Starter motor
⑨ Reverse switch
⑩ CDI unit
⑪ Rear brake switch
⑫ Ignition coil
⑬ Spark plug
⑭ Speed sensor
⑮ Meter assembly
⑯ Multi-function meter
⑰ Differential gear lock indicator light
⑱ Coolant temperature indicator light
⑲ Reverse indicator light
⑳ Neutral indicator light
㉑ Park indicator light
㉒ High-range indicator light
㉓ Low-range indicator light
㉔ Gear position switch
㉕ Diode
㉖ Fuel sender
㉗ Thermo switch 1
㉘ Circuit breaker (fan motor)
㉙ Thermo switch 2
㉚ Fan motor
㉛ Four-wheel drive fuse
㉜ Four-wheel drive relay 1
㉝ Four-wheel drive relay 2
㉞ Four-wheel drive relay 3
㉟ On-command four-wheel drive switch and differential gear lock switch
㊱ Gear motor
㊲ Auxiliary DC jack fuse
㊳ Auxiliary DC jack
㊴ Ignition fuse
㊵ Headlight fuse
㊶ Handlebar switch (left)
㊷ Light switch
㊸ Engine stop switch
㊹ Start switch
㊺ Headlight
㊻ Signaling system fuse
㊼ Rear brake light switch
㊽ Front brake light switch
㊾ Tail/brake light
㊿ Horn switch
(51) Horn

Ⓐ For Europe and Oceania

COLOR CODE

B .....Black	W .....White	G/W.....Green/White	R/W ..... Red/White
Br.....Brown	Y .....Yellow	G/Y.....Green/Yellow	R/Y ..... Red/Yellow
G.....Green	B/R.....Black/Red	L/B .....Blue/Black	W/B ..... White/Black
L.....Blue	B/Y.....Black/Yellow	L/G .....Blue/Green	W/G..... White/Green
O.....Orange	Br/B.....Brown/Black	L/R .....Blue/Red	W/L ..... White/Blue
P .....Pink	Br/L.....Brown/Blue	L/W .....Blue/White	W/R..... White/Red
R.....Red	Br/R .....Brown/Red	L/Y .....Blue/Yellow	Y/B ..... Yellow/Black
Sb .....Sky blue	G/L.....Green/Blue	R/B.....Red/Black	
Gy .....Gray	G/R .....Green/Red	R/G .....Red/Green	